SECTION 07 9200 - JOINT SEALANTS

PART 1 GENERAL

1.1 SECTION INCLUDES

A. Nonsag gunnable joint sealants.
B. Self-leveling pourable joint sealants.
C. Joint backings and accessories.

1.2 RELATED REQUIREMENTS

A. Section 01 6116 - Volatile Organic Compound (VOC) Content Restrictions: Additional requirements for sealants and primers.

1.3 REFERENCE STANDARDS

A. ASTM C834 - Standard Specification for Latex Sealants.
B. ASTM C920 - Standard Specification for Elastomeric Joint Sealants.
C. ASTM C1193 - Standard Guide for Use of Joint Sealants.
D. ASTM C1248 - Standard Test Method for Staining of Porous Substrate by Joint Sealants.

1.4 SUBMITTALS

A. See Section 01 3000 - Administrative Requirements for submittal procedures.
B. Product Data: Submit manufacturer's technical datasheets for each product to be used; include the following:
   1. Physical characteristics, including movement capability, VOC content, hardness, cure time, and color availability.
   2. List of backing materials approved for use with the specific product.
   3. Backing material recommended by sealant manufacturer.
   4. Substrates that product is known to satisfactorily adhere to and with which it is compatible.
   5. Substrates the product should not be used on.
   6. Substrates for which use of primer is required.
C. Executed warranty.

1.5 WARRANTY

A. See Section 01 7800 - Closeout Submittals for additional warranty requirements.
B. Manufacturer Warranty: Provide 2-year manufacturer warranty for installed sealants and accessories that fail to achieve a watertight seal, exhibit loss of adhesion or cohesion, or do not cure. Complete forms in Owner's name and register with manufacturer.

PART 2 PRODUCTS

2.1 MANUFACTURERS

A. Nonsag Sealants:
   1. Dow: www.dow.com/#sle.
   2. Hilti, Inc: www.hilti.com/#sle.
   3. Sika Corporation: usa.sika.com/#sle.
   4. Tremco Commercial Sealants & Waterproofing: www.tremcosealants.com/#sle.
   5. Substitutions: See Section 01 6000 - Product Requirements.

2.2 JOINT SEALANT APPLICATIONS

A. Scope:
   1. Exterior Joints:
      a. Seal open joints except open joints indicated on drawings as not sealed.
   2. Interior Joints:
      a. Do not seal interior joints indicated on drawings as not sealed.

b. Seal open joints except specific open joints indicated on drawings as not sealed.
3. Do Not Seal:
a. Intentional weep holes in masonry.
b. Joints indicated to be covered with expansion joint cover assemblies.
c. Joints where sealant installation is specified in other sections.

B. Exterior Joints: Use nonsag nonstaining silicone sealant, unless otherwise indicated.
1. Lap Joints in Sheet Metal Fabrications: Butyl rubber, noncuring.
2. Control and Expansion Joints in Concrete Paving: Self-leveling polyurethane traffic-grade sealant.

C. Interior Joints: Use nonsag polyurethane sealant, unless otherwise indicated.
1. Wall and Ceiling Joints in Nonwet Areas: Acrylic emulsion latex sealant.
2. Wall and Ceiling Joints in Wet Areas: Nonsag polyurethane sealant for continuous liquid immersion.
3. Joints between Tile in Wet Areas and Floors, Walls, and Ceilings: Mildew-resistant silicone sealant; Architect to choose color from manufacturer's standard line.

D. Interior Wet Areas: Bathrooms, restrooms, kitchens, food service areas, and food processing areas; fixtures in wet areas include plumbing fixtures, food service equipment, countertops, cabinets, and other similar items.

2.3 JOINT SEALANTS - GENERAL

A. Sealants and Primers: Provide products with acceptable levels of volatile organic compound (VOC) content; see Section 01 6116.

2.4 NONSAG JOINT SEALANTS

A. Nonstaining Silicone Sealant: ASTM C920, Grade NS, Uses M, A, G, and O; not expected to withstand continuous water immersion or traffic.
1. Movement Capability: Plus and minus 35 percent, minimum.
2. Nonstaining to Porous Stone: Nonstaining to light-colored natural stone when tested in accordance with ASTM C1248.
3. Dirt Pick-Up: Reduced dirt pick-up compared to other silicone sealants.
4. Color: Match adjacent finished surfaces.
5. Service Temperature Range: Minus 20 to 180 degrees F.

B. Mildew-Resistant Silicone Sealant: ASTM C920, Grade NS, Uses M and A; single component, mildew resistant; not expected to withstand continuous water immersion or traffic.
1. Color: To be Selected by Architect from Manufacturer's Standard Range.

C. Polyurethane Sealant: ASTM C920, Grade NS, Uses M and A; single or multi-component; not expected to withstand continuous water immersion or traffic.
1. Movement Capability: Plus and minus 25 percent, minimum.
2. Color: Match adjacent finished surfaces.
3. Service Temperature Range: Minus 40 to 180 degrees F.

D. Polyurethane Sealant for Continuous Water Immersion: ASTM C920, Grade NS, Uses M and A; single or multicomponent; explicitly approved by manufacturer for continuous water immersion; suitable for traffic exposure when recessed below traffic surface.
1. Movement Capability: Plus and minus 35 percent, minimum.
2. Water Compatibility: Non-Potable.
3. Color: Match adjacent finished surfaces.
4. Service Temperature Range: Minus 40 to 180 degrees F.

E. Acrylic Emulsion Latex: Water-based; ASTM C834, single component, nonstaining, nonbleeding, nonsagging; not intended for exterior use.
1. Color: Standard colors matching finished surfaces, Type OP (opaque).

F. Noncuring Butyl Sealant: Solvent-based, single component, nonsag, nonskinning, nonhardening, nonbleeding; nonvapor permeable; intended for fully concealed applications.

2.5 SELF-LEVELING JOINT SEALANTS

A. Self-Leveling Polyurethane Sealant: ASTM C920, Grade P, Uses M and A; single or multicomponent; explicitly approved by manufacturer for traffic exposure; not expected to withstand continuous water immersion .
   1. Movement Capability: Plus and minus 25 percent, minimum.
   2. Color: To be selected by Architect from manufacturer's standard range.
   3. Service Temperature Range: Minus 40 to 180 degrees F.

2.6 ACCESSORIES

A. Sealant Backing Materials, General: Materials placed in joint before applying sealants; assists sealant performance and service life by developing optimum sealant profile and preventing three-sided adhesion; type and size recommended by sealant manufacturer for compatibility with sealant, substrate, and application.

PART 3 EXECUTION

3.1 EXAMINATION

A. Verify that joints are ready to receive work.
B. Verify that backing materials are compatible with sealants.
C. Verify that backer rods are of the correct size.

3.2 PREPARATION

A. Remove loose materials and foreign matter that could impair adhesion of sealant.
B. Clean joints, and prime as necessary, in accordance with manufacturer's instructions.
C. Perform preparation in accordance with manufacturer's instructions and ASTM C1193.
D. Mask elements and surfaces adjacent to joints from damage and disfigurement due to sealant work; be aware that sealant drips and smears may not be completely removable.

3.3 INSTALLATION

A. Install this work in accordance with sealant manufacturer's requirements for preparation of surfaces and material installation instructions.
B. Provide joint sealant installations complying with ASTM C1193.
C. Install bond breaker backing tape where backer rod cannot be used.
D. Install sealant free of air pockets, foreign embedded matter, ridges, and sags, and without getting sealant on adjacent surfaces.
E. Do not install sealant when ambient temperature is outside manufacturer's recommended temperature range, or will be outside that range during the entire curing period, unless manufacturer's approval is obtained and instructions are followed.
F. Nonsag Sealants: Tool surface concave, unless otherwise indicated; remove masking tape immediately after tooling sealant surface.

END OF SECTION

SECTION 08 0671 - DOOR HARDWARE SCHEDULE

PART 1 GENERAL

1.1 SECTION INCLUDES

A. Preliminary schedule of door hardware sets for swinging, sliding, folding, and other door types as indicated on drawings.

1.2 RELATED REQUIREMENTS

A. Section 08 7100 - Door Hardware: Requirements to comply with in coordination with this section.

1.3 REFERENCE STANDARDS

A. BHMA (CPD) - Certified Products Directory.
B. BHMA A156.18 - Standard for Materials and Finishes.
C. DHI (H&S) - Sequence and Format for the Hardware Schedule.

1.4 SUBMITTALS

A. See Section 01 3000 - Administrative Requirements, for submittal procedures.
B. Comply with submittal requirements as indicated in Section 08 7100.

PART 2 PRODUCTS

2.1 MANUFACTURERS

A. Only manufacturers listed in Door Hardware Schedule or Section 08 7100 are considered acceptable, unless noted otherwise.
B. Obtain each type of door hardware as indicated from a single manufacturer and single supplier.
C. Products are listed and certified compliant with specified standards by BHMA (CPD).
D. Manufacturer's Abbreviations: Coordinate with manufacturers listed in Section 08 7100.
   1. AK - Alarm
   2. CR - Corbin Russwin.
   3. MK - McKinney.
   4. NO - Norton.
   5. PE - Pemko.
   6. RF - Rixson.
   7. RO - Rockwood.
   8. SA - Sargent.
   9. SU - Securitron.

2.2 FINISHES

A. Finishes: Complying with BHMA A156.18.

PART 3 EXECUTION

3.1 DOOR HARDWARE SCHEDULE

A. Organize listing of door hardware components within each hardware set in compliance with 10-Part scheduling sequence indicated in DHI (H&S), unless otherwise indicated.

3.2 HARDWARE SET # 1.0

A. Description: Exterior Aluminum Storefront Pair - Panic Egress - Access Control Function x Auto-Unlock x Auto-Door x Remote Release.
B. For use on Door Number(s): 143.

UNITS	DESCRIPTION	MODEL NUMBER	FINISH	MFR
2	Continuous Hinge	BSPFMxxSL - HD1 PT	BSP	PE
2	Electric Power Transfer	EL-CEPT	BSP	SU

1	Elec CVR Exit Device, EL/RX/LX/NL	ED4800 F457ET M110 M91 M92 MELR	BSP	CR
1	Elec CVR Exit Device, EL/RX/DT	ED4800 F450ET M110 M92 MELR	BSP	CR
1	Rim Cylinder	CR3500 AP	BSP	CR
1	Access Control Reader	By Security Contractor	-	OT
2	Offset Pull	RM3940-24 Mtg-Type 12XHD	BSP	RO
1	Conc Overhead Stop	6-336	BSP	RF
1	Closer w/ Stop	DC8210 A4 x M77/M78 if req'd	BSP	CR
1	Closer Mtg Plate	754F25	BSP	CR
1	Automatic Opener	6331	BSP	NO
1	Threshold	253x3AFG FHSL 14SS	-	PE
2	Wiring Harness - Frame	QC-C3000P	-	MK
2	Wiring Harness - Door	QC-CxxxP for door width	-	MK
2	Door Position Switch	DPS-M	-	SU
2	ADA Switch	5xx Series bollard/wall/jamb as req'd	-	NO
1	Door Release Button	TS-18D	-	AK
1	Power Supply (Consolidate)	AQ series x amps/options req'd	-	SU
1	Seals, Sweeps, & Astragal	By Aluminum Door Mfr	-	OT
1	Wiring Diagram(s)	Point-to-Point/Elev	-	OT

C. Notes: Entry by valid input at reader or remote release by intercom to retract latches (both leafs). Manual key override (active leaf). Free egress at all times. Push / Pull operation as required by electronic auto-unlock via access control system. Door position switches to monitor opening status. Exit devices have integral RX feature to signal egress. Auto-Door system must be integrated with electronic latching hardware. Auto operation by ADA switches. Exterior ADA switch is controlled by latch monitor (LX) feature in exit device and to operate only when latch is in retracted position / unlocked. Vestibule ADA switch will always trigger latch retraction for assisted egress when locked. Coordinate with electrical and security contractors..

3.3 HARDWARE SET #2.0

A. Description: Exterior Aluminum Storefront Pair - Push / Pull Function x Auto-Door.

B. For use on Door Number(s): 100.

UNITS	DESCRIPTION	MODEL NUMBER	FINISH	MFR
2	Continuous Hinge	BSPFMxxSL - HD1	BSP	PE
1	CVR Exit Device, NL/CD	ED4800 F457ET M110 M52	BSP	CR
1	CVR Exit Device, DT/CD	ED4800 F450ET M110 M52	BSP	CR
2	Thumbturn Cylinder	CR1300	BSP	CR
1	Rim Cylinder	CR3500 AP	BSP	CR
2	Offset Pull	RM2330-24 Mtg-Type 12XHD	BSP	RO
1	Conc Overhead Stop	6-336	BSP	RF
1	Closer w/ Stop	DC8210 A4 x M77/M78 if req'd	BSP	CR

1	Closer Mtg Plate	754F25	BSP	CR
1	Automatic Opener	6331	BSP	NO
1	ADA Switch	5xx Series bollard/wall/jamb as req'd	-	NO
1	Dual ADA Switch	504 (Vestibule)	-	NO
1	Seals, Sweeps, & Astragal	By Aluminum Door Mfr	-	OT

C. Notes: Doors normally in unlocked state for free entry and egress at all times. Doors can be manually locked from inside Vestibule 100 by thumbturns in the exit device rails. When locked, entry from exterior by manual key. Free egress at all times. Automatic door operation by post mount exterior or vestibule ADA switches. Vestibule switch is shared with Door 100A.Coordinate with electrical contractor.

3.4 HARDWARE SET #3.0

A. Description: Exterior Aluminum Storeroom - Panic Egress - Access Control Function.

B. For use on Door Number(s): 114.

UNITS	DESCRIPTION	MODEL NUMBER	FINISH	MFR
1	Continuous Hinge	BSPFMxxSL - HD1 PT	BSP	PE
1	Electric Power Transfer	EL-CEPT	BSP	SU
1	Elec CVR Exit Device, EL/RX/NL	ED4800 F457ET M110 M92 MELR	BSP	CR
1	Rim Cylinder	CR3500 AP	BSP	CR
1	Access Control Reader	By Security Contractor	-	OT
1	Offset Pull	RM3940-24 Mtg-Type 12XHD	BSP	RO
1	Closer w/ Stop	DC8210 A4 x M77/M78 if req'd	BSP	CR
1	Closer Mtg Plate	754F25	BSP	CR
1	Threshold	253x3AFG FHSL 14SS	BSP	PE
1	Wiring Harness - Frame	QC-C3000P	-	MK
1	Wiring Harness - Door	QC-CxxxP for door width	-	MK
1	Door Position Switch	DPS-M	-	SU
1	Power Supply (Consolidate)	AQ series x amps/options req'd	-	SU
1	Seals, Sweeps, & Astragal	By Aluminum Door Mfr	-	OT
1	Wiring Diagram(s)	Point-to-Point/Elev	-	OT

C. Notes: Entry by valid input at reader to retract latch or manual key when locked. Free egress at all times. Push / Pull operation as required by electronic auto-unlock via access control system. Door position switch to monitor opening status. Exit devices have integral RX feature to signal egress. Coordinate with electrical and security contractors.

3.5 HARDWARE SET #4.0

A. Description: Exterior - Access Control Function.

B. For use on Door Number(s): 170, 170F

UNITS	DESCRIPTION	MODEL NUMBER	FINISH	MFR
3	HW Hinge, Full Mortise	T4A3386 NRP size per spec	BSP	MK
1	Electric Power Transfer	EL-CEPT	BSP	SU

1	Fail Secure Lock w/ RX	CLX33905 PZD M92 AP	BSP	CR
1	Access Control Reader	By Security Contractor	-	OT
1	Closer w/ Stop	DC8210 A4 x M77/M78 if req'd	BSP	CR
1	Armor Plate	K1050(F) 34" height x CSK x BEV	BSP	RO
1	Perimeter Gasketing	303BSPPK TKSP	BSP	PE
1	Rain Guard	346BSP TKSP	BSP	PE
1	Sweep	345BSPPK TKSP	BSP	PE
1	Threshold	253x3AFG FHSL14SS	BSP	PE
1	Wiring Harness - Frame	QC-C3000P	-	MK
1	Wiring Harness - Door	QC-CxxxP for door width	-	MK
1	Door Position Switch	DPS-M	-	SU
1	Power Supply (Consolidate)	AQ series x amps/options req'd	-	SU
1	Wiring Diagram(s)	Point-to-Point/Elev	-	OT

C. Notes: Entry by valid input at reader to release lever. Free egress at all times. Door position switch to monitor opening status if required. Lockset has RX function to signal egress. Coordinate with electrical and security contractors.

3.6 HARDWARE SET #5.0

A. Description: Aluminum Storefront Pair - Push / Pull Function x Auto-Door

B. For use on Door Number(s): 142

UNITS	DESCRIPTION	MODEL NUMBER	FINISH	MFR
2	Continuous Hinge	BSPFMxxSL - HD1	BSP	PE
2	Offset Pull	RM3940-24 Mtg-Type 12XHD	BSP	RO
2	Push Bar	RM3912 Mtg-Type 12XHD	BSP	RO
1	Conc Overhead Stop	6-336	BSP	RF
1	Closer w/ Stop & Hold-Open	DC8210 A5 x M77/M78 if req'd	BSP	CR
1	Closer Mtg Plate	754F25	BSP	CR
1	Automatic Opener	6331	BSP	NO
1	ADA Switch	5xxx Series bollard/wall/jamb as req'd	-	NO
1	Dual ADA Switch	504 (Vestibule)	-	NO

3.7 HARDWARE SET #6.0

A. Description: Aluminum Storefront Pair - Panic Egress - Access Control Function x Auto-Unlock x Auto-Door x Remote Release

B. For use on Door Number(s): 100A

UNITS	DESCRIPTION	MODEL NUMBER	FINISH	MFR
2	Continuous Hinge	BSPFMxxSL - HD1 PT	BSP	PE
2	Electric Power Transfer	EL-CEPT	BSP	SU
1	Elec CVR Exit Device, EL/RX/LX/NL	ED4800 F457ET M110 M91 M92 MELR	BSP	CR

1	Elec CVR Exit Device, EL/RX/DT	ED4800 F450ET M110 M92 MELR	BSP	CR
1	Rim Cylinder	CR3500 AP	BSP	CR
1	Access Control Reader	By Security Contractor	-	OT
2	Offset Pull	RM3940-24 Mtg-Type 12XHD	BSP	RO
1	Conc Overhead Stop	6-336	BSP	RF
1	Closer w/ Stop	DC8210 A4 x M77/M78 if req'd	BSP	CR
1	Closer Mtg Plate	754F25	BSP	CR
1	Automatic Opener	6331	BSP	NO
2	Wiring Harness - Frame	QC-C3000P	-	MK
2	Wiring Harness - Door	QC-CxxxP for door width	-	MK
2	Door Position Switch	DPS-M	-	SU
1	ADA Switch	5xxx Series bollard/wall/jamb as req'd	-	NO
1	Door Release Button	TS-18D	-	AK
1	Power Supply (Consolidate)	AQ series x amps/options req'd	-	SU
1	Wiring Diagram(s)	Point-to-Point/Elev	-	OT

C. Notes: Entry to Public Lobby 101 by valid input at reader or remote release by intercom to retract latches (both leafs).Manual key override (active leaf). Free egress at all times. Push / Pull operation as required by electronic auto-unlock via access control system. Door position switches to monitor opening status. Exit devices have integral RX feature to signal egress. Auto-Door system must be integrated with electronic latching hardware. Auto operation by ADA switches. Exterior ADA switch is controlled by latch monitor (LX) feature in exit device and to operate only when latch is in retracted position / unlocked. Vestibule ADA switch will always trigger latch retraction for assisted egress when locked. Vestibule switch shared with Door 100.Coordinate with electrical and security contractors.

3.8 HARDWARE SET #7.0

A. Description: Aluminum Storefront - Panic Egress - Access Control Function x Remote Release

B. For use on Door Number(s): 101

UNITS	DESCRIPTION	MODEL NUMBER	FINISH	MFR
1	Continuous Hinge	BSPFMxxSL - HD1 PT	BSP	PE
1	Electric Power Transfer	EL-CEPT	BSP	SU
1	Elec CVR Exit Device, EL/RX/LX/NL	ED4200 F457ET M110 M91 M92 MELR	BSP	CR
1	Rim Cylinder	CR3500 AP	BSP	CR
1	Access Control Reader	By Security Contractor	-	OT
1	Offset Pull	RM3940-24 Mtg-Type 12XHD	BSP	RO
1	Closer w/ Stop	DC8210 A4 x M77/M78 if req'd	BSP	CR
1	Closer Mtg Plate	754F25	BSP	CR
1	Wiring Harness - Frame	QC-C3000P	-	MK
1	Wiring Harness - Door	QC-CxxxP for door width	-	MK
1	Door Position Switch	DPS-M	-	SU

1	Door Release Button	TS-18D	-	AK
1	Power Supply (Consolidate)	AQ series x amps/options req'd	-	SU
1	Wiring Diagram(s)	Point-to-Point/Elev	-	OT

C. Notes: Entry by valid input at reader or remote release by Reception to retract latch. Manual key override. Free egress at all times. Door position switch to monitor opening status. Exit device has RX function to signal egress. Coordinate with electrical, alarm and security contractors.

3.9 HARDWARE SET #8.0

A. Description: Access Control Function x Remote Release x Closer w/ Stop - Bullet Resistant

B. For use on Door Number(s): 106

UNITS	DESCRIPTION	MODEL NUMBER	FINISH	MFR
2	HW Hinge, Full Mortise	T4A3786 NRP size per spec	BSP	MK
1	Elec HW Hinge, Full Mortise	T4A3786 QC size per spec	BSP	MK
1	Fail Secure Lock w/ RX	CLX33905 PZD M92 AP	BSP	CR
1	Access Control Reader	By Security Contractor	-	OT
1	Closer w/ Stop	DC8210 A4 x M77/M78 if req'd	BSP	CR
1	Kick Plate	K1050 8" height x CSK x BEV	BSP	RO
3	Silencer	608/609	-	ro
1	Wiring Harness - Frame	QC-C3000P	-	MK
1	Wiring Harness - Door	QC-CxxxP for door width	-	MK
1	Door Position Switch	DPS-M	-	SU
1	Door Release Button	TS-18D	-	AK
1	Power Supply (Consolidate)	AQ series x amps/options req'd	-	SU
1	Wiring Diagram(s)	Point-to-Point/Elev	-	OT

C. Notes: Entry by valid input at reader or remote release by Reception to release lever. Manual key override. Free egress at all times. Door position switch to monitor opening status. Lock has RX option to signal egress. Coordinate with electrical, alarm and security contractors.

3.10 HARDWARE SET #9.0

A. Description: Access Control Function (Fail Safe) x Closer w/ Stop x Armor Plate.

B. For use on Door Number(s): 162

UNITS	DESCRIPTION	MODEL NUMBER	FINISH	MFR
2	Hinge, Full Mortise	TA2714 size per spec, NRP as req'd	BSP	MK
1	Elec Hinge, Full Mortise	TA2714 QC size per spec	BSP	MK
1	Fail Safe Lock w/ RX	CLX33903 PZD M92 AP	BSP	CR
1	Access Control Reader	By Security Contractor	-	OT
1	Closer w/ Stop	DC8210 A4 x M77/M78 if req'd	BSP	CR
1	Armor Plate	K1050(F) 34" height x CSK x BEV	BSP	RO
3	Silencer	608/609	-	RO
1	Wiring Harness - Frame	QC-C3000P	-	MK

1	Wiring Harness - Door	QC-CxxxP for door width	-	MK
1	Door Position Switch	DPS-M	-	SU
1	Power Supply (Consolidate)	AQ series x amps/options req'd	-	SU
1	Wiring Diagram(s)	Point-to-Point/Elev	-	OT

C. Notes: Entry by valid input at reader to release lever or manual key. Free egress at all times. Lockset is "fail safe" and must be integrated with building fire alarm system and release in alarmed state. Door position switch to monitor opening status. Lockset has RX function to signal egress. Coordinate with electrical, alarm and security contractors.

3.11 HARDWARE SET # 9.1

A. Description: Access Control Function (Fail Safe) x Closer w/ Stop

B. For use on Door Number(s): 109

UNITS	DESCRIPTION	MODEL NUMBER	FINISH	MFR
2	Hinge, Full Mortise	TA2714 size per spec, NRP as req'd	BSP	MK
1	Elec Hinge, Full Mortise	TA2714 QC size per spec	BSP	MK
1	Fail Safe Lock w/ RX	CLX33903 PZD M92 AP	BSP	CR
1	Access Control Reader	By Security Contractor	-	OT
1	Closer w/ Stop	DC8210 A4 x M77/M78 if req'd	BSP	CR
1	Kick Plate	K1050 8" height x CSK x BEV	BSP	RO
3	Silencer	608/609	-	RO
1	Wiring Harness - Frame	QC-C3000P	-	MK
1	Wiring Harness - Door	QC-CxxxP for door width	-	MK
1	Door Position Switch	DPS-M	-	SU
1	Power Supply (Consolidate)	AQ series x amps/options req'd	-	SU
1	Wiring Diagram(s)	Point-to-Point/Elev	-	OT

C. Notes: Entry by valid input at reader to release lever or manual key. Free egress at all times. Lockset is "fail safe" and must be integrated with building fire alarm system and release in alarmed state. Door position switch to monitor opening status. Lockset has RX function to signal egress. Coordinate with electrical, alarm and security contractors.

3.12 HARDWARE SET #10.0

A. Description: Access Control Function (Fail Secure) x Closer

B. For use on Door Number(s): 127

UNITS	DESCRIPTION	MODEL NUMBER	FINISH	MFR
2	Hinge, Full Mortise	TA2714 size per spec, NRP as req'd	BSP	MK
1	Elec Hinge, Full Mortise	TA2714 QC size per spec	BSP	MK
1	Fail Secure Lock w/ RX	CLX33903 PZD M92 AP	BSP	CR
1	Access Control Reader	By Security Contractor	-	OT
1	Closer, Tri-Mount	DC8200	BSP	CR
1	Kick Plate	K1050 8" height x CSK x BEV	BSP	RO
1	Door Stop	400 series as req'd	BSP	RO
1	Wiring Harness - Frame	QC-C3000P	-	MK

1	Wiring Harness - Door	QC-CxxxP for door width	-	MK
1	Door Position Switch	DPS-M	-	SU
1	Power Supply (Consolidate)	AQ series x amps/options req'd	-	SU
1	Wiring Diagram(s)	Point-to-Point/Elev	-	OT

C. Notes: Entry by valid input at reader to release lever or manual key. Free egress at all times.Lockset is "fail secure" and must be integrated with building fire alarm system and release in alarmed state.Door position switch to monitor opening status. Lockset has RX function to signal egress.Coordinate with electrical, alarm and security contractors.

3.13 HARDWARE SET #11.0

A. Description: Access Control Function x Closer w/ Stop x HW Hinges - Fire Rated

B. For use on Door Number(s): 114A

UNITS	DESCRIPTION	MODEL NUMBER	FINISH	MFR
2	HW Hinge, Full Mortise	T4A3786 NRP size per spec	BSP	MK
1	Elec HW Hinge, Full Mortise	T4A3786 QC size per spec	BSP	MK
1	Fail Secure Lock w/ RX	CLX33905 PZD M92 AP	BSP	CR
1	Access Control Reader	By Security Contractor	-	OT
1	Closer w/ Stop	DC8210 A4 x M77/M78 if req'd	BSP	CR
1	Armor Plate	K1050(F) 34" height x CSK x BEV	BSP	RO
1	Gasketing	S88	-	PE
1	Wiring Harness - Frame	QC-C3000P	-	MK
1	Wiring Harness - Door	QC-CxxxP for door width	-	MK
1	Door Position Switch	DPS-M	-	SU
1	Power Supply (Consolidate)	AQ series x amps/options req'd	-	SU
1	Wiring Diagram(s)	Point-to-Point/Elev	-	OT

C. Notes: Entry by valid input at reader to release lever or manual key. Free egress at all times.Door position switch to monitor opening status. Lock has RX option to signal egress.Coordinate with electrical and security contractors.

3.14 HARDWARE SET #12.0

A. Description: Access Control Function x Closer w/ Stop

B. For use on Door Number(s): 170A

UNITS	DESCRIPTION	MODEL NUMBER	FINISH	MFR
2	HW Hinge, Full Mortise	T4A2714 size per spec, NRP as req'd	BSP	MK
1	Elec HW Hinge, Full Mortise	T4A2714 QC size per spec	BSP	MK
1	Fail Secure Lock w/ RX	CLX33905 PZD M92 AP	BSP	CR
1	Access Control Reader	By Security Contractor	-	OT
1	Closer w/ Stop	DC8210 A4 x M77/M78 if req'd	BSP	CR
1	Armor Plate	K1050(F) 34" height x CSK x BEV	BSP	RO

3	Silencer	608/609	-	PE
1	Wiring Harness - Frame	QC-C3000P	-	MK
1	Wiring Harness - Door	QC-CxxxP for door width	-	MK
1	Door Position Switch	DPS-M	-	SU
1	Power Supply (Consolidate)	AQ series x amps/options req'd	-	SU
1	Wiring Diagram(s)	Point-to-Point/Elev	-	OT

C. Notes: Entry by valid input at reader to release lever or manual key. Free egress at all times.Door position switch to monitor opening status. Lock has RX option to signal egress.Coordinate with electrical and security contractors.

3.15 HARDWARE SET #13.0

A. Description: Access Control Function x Closer x HW Hinges - Fire Rated

B. For use on Door Number(s): 158

UNITS	DESCRIPTION	MODEL NUMBER	FINISH	MFR
2	HW Hinge, Full Mortise	T4A3786 NRP size per spec	BSP	MK
1	Elec HW Hinge, Full Mortise	T4A3786 QC size per spec	BSP	MK
1	Fail Secure Lock w/ RX	CLX33905 PZD M92 AP	BSP	CR
1	Access Control Reader	By Security Contractor	-	OT
1	Closer, Tri-Mount	DC8200	BSP	CR
1	Armor Plate	K1050(F) 34" height x CSK x BEV	BSP	RO
1	Door Stop	400 series as req'd	BSP	RO
1	Gasketing	S88	-	PE
1	Wiring Harness - Frame	QC-C3000P	-	MK
1	Wiring Harness - Door	QC-CxxxP for door width	-	MK
1	Door Position Switch	DPS-M	-	SU
1	Power Supply (Consolidate)	AQ series x amps/options req'd	-	SU
1	Wiring Diagram(s)	Point-to-Point/Elev	-	OT

C. Notes: Entry by valid input at reader to release lever or manual key. Free egress at all times.Door position switch to monitor opening status. Lock has RX option to signal egress.Coordinate with electrical and security contractors.

3.16 HARDWARE SET #14.0

A. Description: Access Control Function x Closer - Fire Rated

B. For use on Door Number(s): 157

UNITS	DESCRIPTION	MODEL NUMBER	FINISH	MFR
2	HW Hinge, Full Mortise	TA2714 size per spec, NRP as req'd	BSP	MK
1	Elec HW Hinge, Full Mortise	TA2714 QC size per spec	BSP	MK
1	Fail Secure Lock w/ RX	CLX33905 PZD M92 AP	BSP	CR
1	Access Control Reader	By Security Contractor	-	OT

1	Closer, Tri-Mount	DC8200	BSP	CR
1	Armor Plate	K1050(F) 34" height x CSK x BEV	BSP	RO
1	Gasketing	S88	-	PE
1	Wiring Harness - Frame	QC-C3000P	-	MK
1	Wiring Harness - Door	QC-CxxxP for door width	-	MK
1	Door Position Switch	DPS-M	-	SU
1	Power Supply (Consolidate)	AQ series x amps/options req'd	-	SU
1	Wiring Diagram(s)	Point-to-Point/Elev	-	OT

C. Notes: Entry by valid input at reader to release lever or manual key. Free egress at all times.Door position switch to monitor opening status. Lock has RX option to signal egress.Coordinate with electrical and security contractors.

3.17 HARDWARE SET #15.0

A. Description: Access Control Function x Closer

B. For use on Door Number(s): 162A, 165A

UNITS	DESCRIPTION	MODEL NUMBER	FINISH	MFR
2	HW Hinge, Full Mortise	TA2714 size per spec, NRP as req'd	BSP	MK
1	Elec HW Hinge, Full Mortise	TA2714 QC size per spec	BSP	MK
1	Fail Secure Lock w/ RX	CLX33905 PZD M92 AP	BSP	CR
1	Access Control Reader	By Security Contractor	-	OT
1	Closer, Tri-Mount	DC8200	BSP	CR
1	Kick Plate	K1050 8" height x CSK x BEV	BSP	RO
3	Silencer	608/609	-	RO
1	Wiring Harness - Frame	QC-C3000P	-	MK
1	Wiring Harness - Door	QC-CxxxP for door width	-	MK
1	Power Supply (Consolidate)	AQ series x amps/options req'd	-	SU
1	Wiring Diagram(s)	Point-to-Point/Elev	-	OT

C. Notes: Entry by valid input at reader to release lever or manual key. Free egress at all times.Coordinate with electrical and security contractors.

3.18 HARDWARE SET #16.0

A. Description: Access Control Function Pair - Active x Inactive - Fire Rated

B. For use on Door Number(s): 163, 163A, 164

UNITS	DESCRIPTION	MODEL NUMBER	FINISH	MFR
5	HW Hinge, Full Mortise	TA2714 size per spec, NRP as req'd	BSP	MK
1	Elec HW Hinge, Full Mortise	TA2714 QC size per spec	BSP	MK
1	Dust Proof Strike	570	BSP	RO
1	Latching Flush Bolt	2845/2945 as req'd	BSP	RO
1	Fail Secure Lock w/ RX	CLX33905 PZD M92 AP	BSP	CR

1	Access Control Reader	By Security Contractor		RO
1	Coordinator	576	BSP	RO
1	Surf Overhead Stop	10-336	BSP	RF
2	Closer, Tri-Mount	DC8200	BSP	CR
2	Armor Plate	K1050(F) 34" heigh x CSK x BEV	BSP	RO
1	Door Stop	400 series as req'd	BSP	RO
1	Gasketing	S88	-	PE
1	Wiring Harness - Frame	QC-C3000P	-	MK
1	Wiring Harness - Door	QC-CxxxP for door width	-	MK
2	Door Position Switch	DPS-M	-	SU
1	Power Supply (Consolidate)	AQ series x amps/options req'd	-	SU
1	Wiring Diagram(s)	Point-to-Point/Elev	-	OT

C. Notes: Entry by valid input at reader to release lever or manual key (active leaf). Free egress at all times.Door position switches to monitor opening status. Lockset has RX option to signal egress.Coordinate with electrical and security contractors.

3.19 HARDWARE SET #17.0

A. Description: Access Control Function (Dual Authentication) x HW Hinges

B. For use on Door Number(s): 167, 168

UNITS	DESCRIPTION	MODEL NUMBER	FINISH	MFR
2	HW Hinge, Full Mortise	T4A3786 NRP size per spec	BSP	MK
1	Elec HW Hinge, Full Mortise	T4A3786 QC size per spec	BSP	MK
1	Fail Secure Lock w/ RX	CLX33905 PZD M92 AP	BSP	CR
1	Access Control Reader	By Security Contractor	-	OT
1	Keypad / Biometric Reader	By Security Contractor	-	OT
1	Closer, Tri-Mount	DC8200	BSP	CR
1	Door Stop	400 series as req'd	BSP	RO
3	Silencer	608/609	-	RO
1	Wiring Harness - Frame	QC-C3000P	-	MK
1	Wiring Harness - Door	QC-CxxxP for door width	-	MK
1	Door Position Switch	DPS-M	-	SU
1	Power Supply (Consolidate)	AQ series x amps/options req'd	-	SU
1	Wiring Diagram(s)	Point-to-Point/Elev	-	OT

C. Notes: Entry by valid input at reader and keypad (or other device) to release lever or manual key. Free egress at all times.Door position switch to monitor opening status. Lockset has RX option to signal egress.Coordinate with electrical and security contractors.

3.20 HARDWARE SET #18.0

A. Description: Panic Egress w/ Delay & Alarm - Classroom Function x Closer w/ Stop - Fire Rated - Bullet Resistant

B. For use on Door Number(s): 105B

UNITS	DESCRIPTION	MODEL NUMBER	FINISH	MFR
3	HW Hinge, Full Mortise	T4A3786 NRP size per spec	BSP	MK
1	Electric Power Transfer	EL-CEPT	BSP	SU
1	Delayed Egress Rim Exit Device, Classroom	ED5200A D PR955ET M110 M93	BSP	CR
1	Mortise Cylinder	CR1500 AP	BSP	CR
1	Rim Cylinder	CR3500 AP	BSP	CR
2	Access Control Reader	By Security Contractor	-	OT
1	Closer w/ Stop	DC8210 A4 x M77/M78 if req'd	BSP	CR
1	Kick Plate	K1050 8" height x CSK x BEV	BSP	RO
1	Gasketing	S88	-	PE
1	Wiring Harness - Frame	QC-C3000P	-	MK
1	Wiring Harness - Door	QC-CxxxP for door width	-	MK
1	Door Position Switch	DPS-M	-	SU
1	Power Supply (Consolidate)	AQ series x amps/options req'd	-	SU
1	Wiring Diagram(s)	Point-to-Point/Elev	-	OT

C. Notes: Entry to Public Meeting Room 105 by manual key when locked. lever trim can be locked/unlocked as needed. Authorized free egress by valid input at reader in Public Meeting Room to shunt delayed egress alarm sequence when armed.Unauthorized delayed/alarmed egress at all times. Manual egress attempt will trigger 15 second alarmed delay sequence before releasing and allowing egress.Delayed Egress & Alarm on/off/reset by lock cylinder in panic bar rail.Coordinate with electrical, alarm and security contractors.

3.21 HARDWARE SET #19.0

A. Description: Storeroom Function x Kick Plate

B. For use on Door Number(s): 103, 141

UNITS	DESCRIPTION	MODEL NUMBER	FINISH	MFR
3	HW Hinge, Full Mortise	TA2714 size per spec, NRP as req'd	BSP	MK
1	Storeroom Lock	CLX3357 PZD AP	BSP	CR
1	Kick Plate	K1050 8" height x CSK x BEV	BSP	RO
1	Door Stop	400 series as req'd	BSP	RO
3	Silencer	608/609	-	RO

3.22 HARDWARE SET #20.0

A. Description: Storeroom Function

B. For use on Door Number(s): 105A, 122B, 131, 159A, 161

UNITS	DESCRIPTION	MODEL NUMBER	FINISH	MFR
3	Hinge, Full Mortise	TA2714 size per spec, NRP as req'd	BSP	MK
1	Storeroom Lock	CLX3357 PZD AP	BSP	CR
1	Door Stop	400 series as req'd	BSP	RO
3	Silencer	608/609	-	RO

3.23 HARDWARE SET #21.0

A. Description: Storeroom Function Pair - Inswing
B. For use on Door Number(s): 160

UNITS	DESCRIPTION	MODEL NUMBER	FINISH	MFR
6	HW Hinge, Full Mortise	TA2714 size per spec, NRP as req'd	BSP	MK
1	Flush Bolt	555/557 as req'd	BSP	RO
1	Storeroom Lock	CLX3357 PZD AP	BSP	CR
1	Surf Overhead Stop	10-336	BSP	RF
1	Door Stop	400 series as req'd	BSP	RO
2	Silencer	608/609	-	RO

3.24 HARDWARE SET #22.0

A. Description: FEMA / ICC Shelter Door - Classroom Function - Fire Rated
B. For use on Door Number(s): 122, 122A

UNITS	DESCRIPTION	MODEL NUMBER	FINISH	MFR
4	HW Hinge	SP3786 5" x 4-1/2"	BSP	MK
1	Multi-Point Lock	FE6665 PSA LC	BSP	CR
1	Closer w/ Stop	DC8210 A4 M54	BSP	CR
1	Kick Plate	K1050 WS 8" height x CSK x BEV	BSP	RO
1	Gasketing	S773D (Head & Jambs)	-	PE

3.25 HARDWARE SET #23.0

A. Description: Classroom Function Pair - Panic Egress - Fire Rated
B. For use on Door Number(s): 105

UNITS	DESCRIPTION	MODEL NUMBER	FINISH	MFR
6	Hinge, Full Mortise	TA2714 size per spec, NRP as req'd	BSP	MK
2	SVR Exit Device, Classroom	ED5470B PR955ET M55 M110	BSP	CR
2	Closer w/ Stop	DC8210 A4 x M77/M78 if req'd	BSP	CR
2	Closer Mtg Plate	754F25	BSP	CR
2	Kick Plate	K1050 8" height x CSK x BEV	BSP	RO
1	Gasketing	S88	-	PE

3.26 HARDWARE SET #24.0

A. Description: Classroom Function
B. For use on Door Number(s): 133, 137, 150

UNITS	DESCRIPTION	MODEL NUMBER	FINISH	MFR
3	Hinge, Full Mortise	TA2714 size per spec, NRP as req'd	BSP	MK
1	Classroom Lock	CLX3355 PZD AP	BSP	CR
1	Door Stop	400 series as req'd	BSP	RO
3	Silencer	608/609	-	RO

3.27 HARDWARE SET #25.0

A. Description: Office Function

B. For use on Door Number(s): 112, 117, 118, 119, 120, 130, 134, 135, 136, 138, 139, 140, 148, 149, 151, 152, 154.

UNITS	DESCRIPTION	MODEL NUMBER	FINISH	MFR
3	Hinge, Full Mortise	TA2714 size per spec, NRP as req'd	BSP	MK
1	Entrance Lock	CLX3351 PZD AP	BSP	CR
1	Door Stop	400 series as req'd	BSP	RO
3	Silencer	608/609	-	RO

C. Notes: Lockset requires 4-1/2" min. door stile width.

3.28 HARDWARE SET #26.0

A. Description: Surface Sliding Door

B. For use on Door Number(s): 123, 124, 125

UNITS	DESCRIPTION	MODEL NUMBER	FINISH	MFR
1	Sliding Door Track System	DSG-FT-05BSP	BSP	PE
2	Door Pull	RM39-12 Mtg-Type 11XHD	BSP	RO

3.29 HARDWARE SET #27.0

A. Description: Office Function x Closer - Fire Rated

B. For use on Door Number(s): 165

UNITS	DESCRIPTION	MODEL NUMBER	FINISH	MFR
3	Hinge, Full Mortise	TA2714 size per spec, NRP as req'd	BSP	MK
1	Entrance Lock	CLX3351 PZD AP	BSP	CR
1	Closer, Tri-Mount	DC8200	BSP	RO
1	Kick Plate	K1050 8" height x CSK x BEV	BSP	RO
1	Door Stop	400 series as req'd	BSP	RO
1	Gasketing	S88	-	PE
1	Coat Hook	RM812	BSP	RO

3.30 HARDWARE SET #28.0

A. Description: Privacy Function x Overhead Stop

B. For use on Door Number(s): 121

UNITS	DESCRIPTION	MODEL NUMBER	FINISH	MFR
3	Hinge, Full Mortise	TA2314 size per spec	BSP	MK
1	Privacy Lock w/ Indicator	ML2030 PSA V20	BSP	CR
1	Foot Pull	FP1230	BSP	RO
1	Surf Overhead Stop	10-336	BSP	RF
3	Silencer	608/609	-	RO
1	Coat Hook	RM812	BSP	RO

3.31 HARDWARE SET #29.0

A. Description: Privacy Function

B. For use on Door Number(s): 126

UNITS	DESCRIPTION	MODEL NUMBER	FINISH	MFR
3	Hinge, Full Mortise	TA2314 size per spec	BSP	MK
1	Privacy Lock w/ Indicator	ML2030 PSA V20	BSP	CR

1	Foot Pull	FP1230	BSP	RO
1	Door Stop	400 series as req'd	BSP	RO
1	Gasketing	S88	-	PE
1	Coat Hook	RM812	BSP	RO

3.32 HARDWARE SET #30.0

A. Description: Aluminum Storefront - Passage Function

B. For use on Door Number(s): 115, 146

UNITS	DESCRIPTION	MODEL NUMBER	FINISH	MFR
3	Hinge, Full Mortise	TA2714 size per spec, NRP as req'd	BSP	MK
1	Passage Latch (ALSF)	CLX3310 PZD B238	BSP	CR
1	Door Stop	400 series as req'd	BSP	RO

C. Notes: Lockset requires 4-1/2" min. door stile width.

3.33 HARDWARE SET #31.0

A. Description: Passage Function

B. For use on Door Number(s): 107, 108, 113, 116, 132, 132A, 153, 153A

UNITS	DESCRIPTION	MODEL NUMBER	FINISH	MFR
3	Hinge, Full Mortise	TA2714 size per spec, NRP as req'd	BSP	MK
1	Passage Latch	CLX3310 PZD	BSP	CR
1	Door Stop	400 series as req'd	BSP	RO
3	Silencer	608/609	-	RO

C. Notes: Verify hardware set with STC door system manufacturer.

3.34 HARDWARE SET #32.0

A. Description: Passage Function x Closer

B. For use on Door Number(s): 159

UNITS	DESCRIPTION	MODEL NUMBER	FINISH	MFR
3	Hinge, Full Mortise	TA2714 size per spec, NRP as req'd	BSP	MK
1	Passage Latch	CLX3310 PZD	BSP	CR
1	Closer, Tri-Mount	DC8200	BSP	CR
1	Kick Plate	K1050 8" height x CSK x BEV	BSP	RO
1	Door Stop	400 series as req'd	BSP	RO
3	Silencer	608/609	-	RO

3.35 HARDWARE SET #33.0

A. Description: Push / Pull Function - Restrooms / Lockers

B. For use on Door Number(s): 102, 104, 144, 145, 155, 156

UNITS	DESCRIPTION	MODEL NUMBER	FINISH	MFR
3	Hinge, Full Mortise	TA2314 size per spec	BSP	MK
1	Pull Plate	BF 1x70C	BSP	RO
1	Push Plate	70E	BSP	RO
1	Foot Pull	FP1230	BSP	RO
1	Closer, Tri-Mount	DC8200	BSP	CR
1	Kick Plate	K1050 8" height x CSK x BEV	BSP	RO

1	Mop Plate	K1050 4" height x CSK x BEV	BSP	RO
1	Door Stop	400 series as req'd	BSP	RO
3	Silencer	608/609	-	RO

3.36 HARDWARE SET #34.0

A. Demountable Sliding Doors
B. For use on Door Number(s): 129A, 129B, 129C, 129D, 129E, 129F, 129G, 129H, 129J

UNITS	DESCRIPTION	MODEL NUMBER	FINISH	MFR
1	Sliding Track & Hanger	Manufacturer's Standard	BSP	KI Wall
1	Locking Ladder Pull	Manufacturer's Standard	BSP	KI Wall
1	Lock Cylinder	To match other hardware	BSP	-
1	Dust-Proof Strike	Manufacturer's Standard	BSP	KI Wall

3.37 HARDWARE SET #35.0

A. Overhead Doors
B. For use on Door Number(s): 170B, 170C, 170D, 170E
C. Manufacturer's Standard Hardware
D. Overhead doors to be outfitted with Access Control Readers.
E. Notes: Entry by valid input at reader to operate overhead door. Free egress at all times.Coordinate with electrical and security contractors.

END OF SECTION

SECTION 08 1113 - HOLLOW METAL DOORS AND FRAMES

PART 1 GENERAL

1.1 SECTION INCLUDES

A. Non-fire-rated hollow metal doors and frames.
B. Hollow metal frames for wood doors.
C. Fire-rated hollow metal doors and frames.
D. Thermally insulated hollow metal doors with frames.
E. Bullet-resistant hollow metal doors and frames.
F. Tornado-resistant hollow metal doors and frames.
G. Hollow metal borrowed lites glazing frames.

1.2 RELATED REQUIREMENTS

A. Section 08 7100 - Door Hardware.
B. Section 08 8000 - Glazing: Glass for doors and borrowed lites.

1.3 REFERENCE STANDARDS

A. ADA Standards - Americans with Disabilities Act (ADA) Standards for Accessible Design.
B. ANSI/SDI A250.3 - Test Procedure and Acceptance Criteria for Factory Applied Finish Coatings for Steel Doors and Frames.
C. ANSI/SDI A250.4 - Test Procedure and Acceptance Criteria for Physical Endurance for Steel Doors, Frames and Frame Anchors.
D. ANSI/SDI A250.6 - Recommended Practice for Hardware Reinforcing on Standard Steel Doors and Frames.
E. ANSI/SDI A250.8 - Specifications for Standard Steel Doors and Frames (SDI-100).
F. ANSI/SDI A250.10 - Test Procedure and Acceptance Criteria for Prime Painted Steel Surfaces for Steel Doors and Frames.
G. ASCE 7 - Minimum Design Loads and Associated Criteria for Buildings and Other Structures.
H. ASTM A653/A653M - Standard Specification for Steel Sheet, Zinc-Coated (Galvanized) or Zinc-Iron Alloy-Coated (Galvannealed) by the Hot-Dip Process.
I. ASTM A666 - Standard Specification for Annealed or Cold-Worked Austenitic Stainless Steel Sheet, Strip, Plate, and Flat Bar.
J. ASTM A1008/A1008M - Standard Specification for Steel, Sheet, Cold-Rolled, Carbon, Structural, High-Strength Low-Alloy, High-Strength Low-Alloy with Improved Formability, Required Hardness, Solution Hardened, and Bake Hardenable.
K. ASTM A1011/A1011M - Standard Specification for Steel, Sheet and Strip, Hot-Rolled, Carbon, Structural, High-Strength Low-Alloy, High-Strength Low-Alloy with Improved Formability, and Ultra-High Strength.
L. ASTM C143/C143M - Standard Test Method for Slump of Hydraulic-Cement Concrete.
M. ASTM C476 - Standard Specification for Grout for Masonry.
N. ASTM E330/E330M - Standard Test Method for Structural Performance of Exterior Windows, Doors, Skylights and Curtain Walls by Uniform Static Air Pressure Difference.
O. ASTM F1450 - Standard Test Methods for Hollow Metal Swinging Door Assemblies for Detention and Correctional Facilities.
P. BHMA A156.115 - American National Standard for Hardware Preparation in Steel Doors and Steel Frames.
Q. FEMA P-361 - Safe Rooms for Tornadoes and Hurricanes: Guidance for Community and Residential Safe Rooms.
R. FLA (PAD) - Florida Building Code Online - Product Approval Directory.

S. ICC 500 - ICC/NSSA Standard for the Design and Construction of Storm Shelters; National Storm Shelter Association.
T. ICC A117.1 - Accessible and Usable Buildings and Facilities.
U. ITS (DIR) - Directory of Listed Products.
V. Miami (APD) - Approved Products Directory; Miami-Dade County.
W. NAAMM HMMA 840 - Guide Specifications For Receipt, Storage and Installation of Hollow Metal Doors and Frames.
X. NFPA 80 - Standard for Fire Doors and Other Opening Protectives.
Y. NFPA 252 - Standard Methods of Fire Tests of Door Assemblies.
Z. SDI 117 - Manufacturing Tolerances for Standard Steel Doors and Frames.
AA. UL (DIR) - Online Certifications Directory.
BB. UL 10C - Standard for Positive Pressure Fire Tests of Door Assemblies.
CC. UL 752 - Standard for Bullet-Resisting Equipment.
DD. UL 1784 - Standard for Air Leakage Tests of Door Assemblies.

1.4 SUBMITTALS

A. See Section 01 3000 - Administrative Requirements for submittal procedures.
B. Product Data: Materials and details of design and construction, hardware locations, reinforcement type and locations, anchorage and fastening methods, and finishes; and one copy of referenced standards/guidelines.
C. Shop Drawings: Details of each opening, showing elevations, glazing, frame profiles, fire-resistance rating and any indicated finish requirements. Shop Drawings should include the following:
   1. Elevations of each door design.
   2. Details of doors, including vertical and horizontal edge details and metal thicknesses.
   3. Frame details for each frame type, including dimensioned profiles and metal thicknesses.
   4. Locations of reinforcement and preparations for hardware.
   5. Details of anchorages, joints, field splices, and connections.
   6. Details of accessories.
   7. Details of moldings, removable stops, and glazing.
   8. Details of conduit and preparations for power, signal, and control systems.
D. Door hardware supplier is to furnish templates, template reference number and/or physical hardware to the steel door and frame supplier in order to prepare the doors and frames to receive the finish hardware items.

1.5 QUALITY ASSURANCE

A. Source Limitations: Obtain hollow metal doors and frames through one source from a single manufacturer wherever possible.
B. Manufacturer Qualifications: Company specializing in manufacturing products specified in this section, with not less than three years documented experience.
C. Installer Qualifications: Company specializing in performing work of the type specified and with at least three years of documented experience.
D. Quality Standard: In addition to requirements specified, furnish SDI-Certified manufacturer products that comply with ANSI/SDI A250.8, latest edition, "Recommended Specifications for Standard Steel Doors and Frames".
E. Fire-Rated Door Assemblies: Assemblies complying with NFPA 80 that are listed and labeled by a qualified testing agency, for fire-protection ratings indicated, based on testing at positive pressure according to UL10C (neutral pressure at 40” above sill) or UL 10C.

1. Oversize Fire-Rated Door Assemblies Construction: For units exceeding sizes of tested assemblies, attach construction label certifying doors are built to standard construction requirements for tested and labeled fire rated door assemblies except for size.
2. Temperature-Rise Limit: Where indicated and at vertical exit enclosures (stairwell openings) and exit passageways, provide doors that have a maximum transmitted temperature end point of not more than 450 deg F (250 deg C) above ambient after 30 minutes of standard fire-test exposure.
3. Smoke Control Door Assemblies: Comply with NFPA 105.
   a. Smoke "S" Label: Doors to bear “S” label, and include smoke and draft control gasketing applied to frame and on meeting stiles of pair doors.
4. Fire-Rated, Borrowed-Light Frame Assemblies: Assemblies complying with NFPA 80 that are listed and labeled, by a testing and inspecting agency acceptable to authorities having jurisdiction, for fire-protection ratings indicated, based on testing according to NFPA 257. Provide labeled glazing material.

F. Maintain at project site copies of reference standards relating to installation of products specified.

1.6 DELIVERY, STORAGE, AND HANDLING

A. Comply with NAAMM HMMA 840 or ANSI/SDI A250.8 (SDI-100) in accordance with specified requirements.
B. Deliver hollow metal work palletized, wrapped, or crated to provide protection during transit and Project site storage. Do not use non-vented plastic.
C. Protect with resilient packaging; avoid humidity build-up under coverings; prevent corrosion and adverse effects on factory applied painted finish.
D. Deliver welded frames with two removable spreader bars across bottom of frames, tack welded to jambs and mullions.
E. Store hollow metal work under cover at Project site. Place in stacks of five units maximum in a vertical position with heads up, spaced by blocking, on minimum 4-inch high wood blocking. Do not store in a manner that traps excess humidity.
   1. Provide minimum 1/4-inch space between each stacked door to permit air circulation. Door and frames to be stacked in a vertical upright position.

1.7 PROJECT CONDITIONS

A. Field Measurements: Verify actual dimensions of openings by field measurements before fabrication.

1.8 COORDINATION

A. Coordinate installation of anchorages for hollow metal frames. Furnish setting drawings, templates, and directions for installing anchorages, including sleeves, concrete inserts, anchor bolts, and items with integral anchors. Deliver such items to Project site in time for installation.

1.9 WARRANTY

A. Special Warranty: Manufacturer's standard form in which manufacturer agrees to repair or replace doors that fail in materials or workmanship within specified warranty period.
B. Warranty includes installation and finishing that may be required due to repair or replacement of defective doors.

PART 2 PRODUCTS

2.1 MANUFACTURERS

A. Hollow Metal Doors and Frames:
   1. Ceco Door, an Assa Abloy Group company: www.assaabloydss.com/#sle.
   2. Curries, an Assa Abloy Group company: www.assaabloydss.com/#sle.
   3. Steelcraft, an Allegion brand: www.allegion.com/#sle.
   4. Substitutions: See Section 01 6000 - Product Requirements.

B. Bullet-Resistant and Detention Security Hollow Metal Doors and Frames:
   1. Armortex.
   2. Substitutions: See Section 01 6000 - Product Requirements.
C. Tornado-Resistant Hollow Metal Doors and Frames:
   1. Assa Abloy Ceco Door; StormPro Tornado Resistant Door.
   2. Substitutions: See Section 01 6000 - Product Requirements.

2.2 PERFORMANCE REQUIREMENTS

A. Requirements for Hollow Metal Doors and Frames:
   1. Provide 1-3/4 inch doors of design indicated, not less than thickness indicated; fabricated with smooth surfaces, without visible joints or seams on exposed faces unless otherwise indicated. Comply with ANSI/SDI A250.8 and ANSI/NAAMM HMMA 867.
   2. Steel Sheet: Comply with one or more of the following requirements; galvannealed steel complying with ASTM A653/A653M, cold-rolled steel complying with ASTM A1008/A1008M, or hot-rolled pickled and oiled (HRPO) steel complying with ASTM A1011/A1011M, commercial steel (CS) Type B, for each.
   3. Provide doors complying with requirements indicated below by referencing ANSI/SDI A250.8 for level and model and ANSI/SDI A250.4 for physical performance level:
      a. Design: Flush panel.
         1) Fire Door Core: As required to provide fire-protection and temperature-rise ratings indicated.
      b. Top and Bottom Edges: Reinforce tops and bottoms of doors with a continuous steel channel not less than 16 gauge, extending the full width of the door and welded to the face sheet.
      c. Hardware Reinforcements: Fabricate according to ANSI/SDI A250.6 with reinforcing plates from same material as door face sheets.
   4. Accessibility: Comply with ICC A117.1 and ADA Standards.
B. Hollow Metal Panels: Same construction, performance, and finish as doors.
C. Combined Requirements: If a particular door and frame unit is indicated to comply with more than one type of requirement, comply with the specified requirements for each type; for instance, an exterior door that is also indicated as being sound-rated must comply with the requirements specified for exterior doors and for sound-rated doors; where two requirements conflict, comply with the most stringent.
D. Hollow Metal Frame Anchors:
   1. Masonry Type: Adjustable strap-and-stirrup or T-shaped anchors to suit frame size, formed from A60 metallic coated material, not less than 0.042 inch thick, with corrugated or perforated straps not less than 2 inches wide by 10 inches long; or wire anchors not less than 0.177 inch thick.
   2. Stud Wall Type: Designed to engage stud and not less than 0.042 inch thick.

2.3 MATERIALS

A. Cold-Rolled Steel Sheet: ASTM A 1008/A 1008M, Commercial Steel (CS), Type B; suitable for exposed applications.
B. Metallic-Coated Steel Sheet: ASTM A 653/A 653M, Commerical Steel (CS), Type B; with minimum G60 (Z180) or A60 (ZF180) metallic coating.
C. Frame Anchors: ASTM A 653/A 653M, Commercial Steel (CS), Type B; with minimum G60 (Z180) or A 60 (ZF180) metallic coating.

2.4 HOLLOW METAL DOORS

A. Exterior Doors: Thermally insulated.
   1. Based on SDI Standards: ANSI/SDI A250.8 (SDI-100).
      a. Level 3 - Extra Heavy-duty.

b. Physical Performance Level A, 1,000,000 cycles; in accordance with ANSI/SDI A250.4.
c. Model 1 - Full Flush.
d. Door Face Metal Thickness: 16 gauge, 0.053 inch, minimum.

2. Door Core Material: To comply with R-Value Requirements on drawings.
3. Door Thickness: 1-3/4 inches, nominal.
4. Top Closures for Outswinging Doors: Flush with top of faces and edges.
5. Weatherstripping: Integral, recessed into door edge or frame.
6. Door Finish: Factory primed and field finished.
7. Hinge Reinforcement: Minimum 7 gauge (3/16") plate 1-1/4" x 9" or minimum 14 gauge continuous channel with pierced holes, drilled and tapped.
8. Hardware Reinforcements: Fabricate according to ANSI/SDI A250.6 with reinforcing plates from same material as door face sheets.

B. Interior Doors, Non-Fire-Rated:

1. Based on SDI Standards: ANSI/SDI A250.8 (SDI-100).
   a. Level 2 - Heavy-duty.
   b. Physical Performance Level B, 500,000 cycles; in accordance with ANSI/SDI A250.4.
   c. Model 1 - Full Flush.
   d. Door Face Metal Thickness: 18 gauge, 0.042 inch, minimum.
2. Door Core Material: Manufacturer's standard kraft-paper honeycomb, or one-piece polystryrene core, securely bonded to both faces..
3. Door Thickness: 1-3/4 inches, nominal.
4. Door Finish: Factory primed and field finished.

C. Fire-Rated Doors:

1. Based on SDI Standards: ANSI/SDI A250.8 (SDI-100).
   a. Level 2 - Heavy-duty.
   b. Physical Performance Level B, 500,000 cycles; in accordance with ANSI/SDI A250.4.
   c. Model 1 - Full Flush.
   d. Door Face Metal Thickness: 18 gauge, 0.042 inch, minimum.
2. Fire Rating: As indicated on Door Schedule, tested in accordance with UL 10C and NFPA 252 ("positive pressure fire tests").
3. Provide units listed and labeled by UL (DIR) or ITS (DIR).
   a. Attach fire rating label to each fire rated unit.
4. Door Thickness: 1-3/4 inches, nominal.
5. Door Finish: Factory primed and field finished.

D. Bullet-Resistant Doors; Interior:

1. Based on SDI Standards: ANSI/SDI A250.8 (SDI-100).
   a. Level 2 - Heavy-duty.
   b. Physical Performance Level B, 500,000 cycles; in accordance with ANSI/SDI A250.4.
   c. Model 1 - Full Flush.
   d. Door Face Metal Thickness: 18 gauge, 0.042 inch, minimum.
2. Bullet Resistance: UL 752, Threat Level Rating - Level 3.
3. Door Core Material: Manufacturers standard core material/construction in compliance with requirements.
4. Door Thickness: As required to meet requirements indicated.
5. Door Face Sheets: Flush.
6. Door Finish: Factory primed and field finished.

E. Tornado-Resistant Doors:

1. Design and size door and frame components to withstand the specified load requirements without damage or permanent set, when tested in accordance with ASTM E330/E330M.
    a. Design Wind Loads: Comply with requirements of authorities having jurisdiction.
    b. Wind-Borne Debris Resistance: Door and frame components shall have FLA (PAD) approval, Miami (APD) approval, or UL (DIR) approval for Large and Small Missile impact and pressure cycling at design wind loads.
2. Tornado Shelter Application: Comply with ICC 500 standard.
    a. Commercial: Designed and tested to comply with FEMA P-361 community shelter door assembly guidelines.
3. Based on SDI Standards: ANSI/SDI A250.8 (SDI-100).
    a. Level 3 - Extra Heavy-duty.
    b. Physical Performance Level A, 1,000,000 cycles; in accordance with ANSI/SDI A250.4.
    c. Model 1 - Full Flush.
    d. Door Face Metal Thickness: 16 gauge, 0.053 inch, minimum.

2.5 HOLLOW METAL FRAMES

A. Comply with standards and/or custom guidelines as indicated for corresponding door in accordance with applicable door frame requirements.
B. Frame Finish: Factory primed and field finished.
C. Exterior Door Frames: Full profile/continuously welded type.
    1. Galvanizing: Components hot-dipped zinc-iron alloy-coated (galvannealed) in accordance with ASTM A653/A653M, with A40/ZF120 coating.
    2. Frame Metal Thickness: 14 gauge, 0.067 inch, minimum.
    3. Weatherstripping: Integral, recessed into frame edge.
    4. Fabricate frames with mitered or coped corners. Profile as indicated on drawings.
D. Interior Door Frames, Non-Fire Rated: Full profile/continuously welded type.
    1. Terminated Stops: Provide at interior doors; closed end stop terminated 6 inch, maximum, above floor at 45 degree angle.
    2. Frame Metal Thickness: 16 gauge, 0.053 inch, minimum.
E. Door Frames, Fire-Rated: Full profile/continuously welded type.
    1. Fire Rating: Same as door, labeled.
    2. Fabricate frames in accordance with NFPA 80, listed and labeled by a qualified testing agency, for fire-protection ratings indicated.
    3. Frame Metal Thickness: 16 gauge, 0.053 inch, minimum.
F. Bullet-Resistant Door Frames: Comply with UL 752, with same level of bullet resistance as door; face welded construction, ground smooth, fully prepared and reinforced for hardware installation.
    1. Frame Metal Thickness: 14 gauge, 0.067 inch, minimum.
G. Tornado-Resistant Door Frames: With same tornado resistance as door; face welded or full profile/continuously welded construction, ground smooth, fully prepared and reinforced for hardware installation.
    1. Frame Metal Thickness: 14 gauge, 0.067 inch, minimum.
H. Frames for Wood Doors: Comply with frame requirements in accordance with corresponding door.
I. Mullions for Pairs of Doors: Removable type, with profile similar to jambs.
J. Borrowed Lites Glazing Frames: Construction and face dimensions to match door frames, and as indicated on drawings.
K. Provide mortar guard boxes for hardware cut-outs in frames to be installed in masonry or to be grouted.

L. Frames in Masonry Walls: Size to suit masonry coursing with head member 4 inches high to fill opening without cutting masonry units.
M. Frames Wider than 48 inches: Reinforce with steel channel fitted tightly into frame head, flush with top.
N. Hardware Reinforcement: Fabricate according to ANSI/SDI A250.6 Table 4 with reinforcement plates from same material as frames.

2.6 LIGHT OPENINGS AND GLAZING

A. Stops and Moldings: Provide stops and moldings around glazed lites where indicated. Form corners of stops and moldings with butted or mitered hairline joints at fabricator's shop. Fixed and removable stops to allow multiple glazed lites each to be removed independently. Coordinate frame rabbet widths between fixed and removable stops with the type of glazing and installation indicated.
B. Moldings for Glazed Lites in Doors and Loose Stops for Glazed Lites in Frames: Minimum 20 gauge thick, fabricated from same material as door face sheet in which they are installed.
C. Fixed Frame Moldings: Formed integral with hollow metal frames, a minimum of 5/8 inch (16 mm) high unless otherwise indicated. Provide fixed frame moldings and stops on outside of exterior and on secure side of interior doors and frames.

2.7 FABRICATION

A. Fabricate hollow metal work to be rigid and free of defects, warp, or buckle. Accurately form metal to required sizes and profiles, with minimum radius for thickness of metal. Where practical, fit and assemble units in manufacturer's plant. When shipping limitations so dictate, frames for large openings are to be fabricated in sections for splicing or splining in the field by others.
B. Tolerances: Fabricate hollow metal work to tolerances indicated in ANSI/SDI A250.8.
C. Hollow Metal Doors:
    1. Exterior Doors: Provide optional weep-hole openings in bottom of exterior doors to permit moisture to escape where specified.
D. Hollow Metal Frames:
    1. Shipping Limitations: Where frames are fabricated in sections due to shipping or handling limitations, provide alignment plates or angles at each joint, fabricated of same thickness metal as frames.
    2. Welded Frames: Weld flush face joints continuously; grind, fill, dress, and make smooth, flush, and invisible.
        a. Welded frames are to be provided with two steel spreaders temporarily attached to the bottom of both jambs to serve as a brace during shipping and handling. Spreader bars are for bracing only and are not to be used to size the frame opening.
    3. Sidelight and Transom Bar Frames: Provide closed tubular members with no visible face seams or joints, fabricated from same material as door frame. Fasten members at crossings and to jambs by butt welding.
    4. High Frequency Hinge Reinforcement: Provide high frequency hinge reinforcements at door openings 48-inches and wider with mortise butt type hinges at top hinge locations.
    5. Provide countersunk, flat- or oval-head exposed screws and bolts for exposed fasteners unless otherwise indicated for removable stops, provide security screws at exterior locations.
    6. Mortar Guards: Provide guard boxes at back of hardware mortises in frames at all hinges and strike preps regardless of grouting requirements.
    7. Floor Anchors: Weld anchors to bottom of jambs and mullions with at least four spot welds per anchor.
    8. Jamb Anchors: Provide number and spacing of anchors as follows:
        a. Masonry Type: Locate anchors not more than 18 inches from top and bottom of frame. Space anchors not more than 32 inches o.c. and as follows:

1) Three anchors per jamb from 60 to 90 inches high.
2) Four anchors per jamb from 90 to 120 inches high.

b. Stud Wall Type: Locate anchors not more than 18 inches from top and bottom of frame. Space anchors not more than 32 inches o.c. and as follows:
1) Four anchors per jamb from 60 to 90 inches high.
2) Five anchors per jamb from 90 to 96 inches high.

9. Door Silencers: Except on weatherstripped or gasketed doors, drill stops to receive door silencers. Silencers to be supplied by frame manufacturer regardless if specified in Division 08 Section "Door Hardware".

E. Hardware Preparation: Factory prepare hollow metal work to receive template mortised hardware; include cutouts, reinforcement, mortising, drilling, and tapping according to the Door Hardware Schedule and templates furnished as specified in Division 08 Section "Door Hardware."
1. Locate hardware as indicated, or if not indicated, according to ANSI/SDI A250.8.

2.8 FINISHES

A. Primer: Rust-inhibiting, complying with ANSI/SDI A250.10, door manufacturer's standard. Doors and frames to be cleaned, and chemically treated to insure maximum finish paint adhesion. Surfaces of the door and frame exposed to view to receive a factory applied coat of rust inhibiting shop primer. Refer to Drawings for Color.

2.9 ACCESSORIES

A. Door Window Frames: Door window frames with glazing securely fastened within door opening.
1. Size: As indicated on drawings.
2. Frame Material: 18 gauge, 0.0478 inch, galvanized steel.
3. Glazing: 1/4 inch thick, tempered glass, in compliance with requirements of authorities having jurisdiction.

B. Removable Stops: Formed sheet steel, shape as indicated on drawings, mitered or butted corners; prepared for countersink style tamper proof screws.

C. Astragals and Edges for Double Doors: Pairs of door astragals, and door edge sealing and protection devices.
1. UL listed products in compliance with requirements of authorities having jurisdiction.
2. Provide surface mounted astragal to cover or fill space for full door height between pair of doors or door and adjacent jamb.
3. Astragal Type: Split, two parts, and with automatic locking, cutouts for other door hardware, and sealing gasket.
4. Edge Type: Beveled edge

D. Grout Guards: Formed from same material as frames, not less than 0.016 inches thick.

E. Grout for Frames: Mortar grout complying with ASTM C476 with maximum slump of 4 inches as measured in accordance with ASTM C143/C143M for hand troweling in place; plaster grout and thinner pumpable grout are prohibited.

F. Silencers: Resilient rubber, fitted into drilled hole; provide three on strike side of single door, three on center mullion of pairs, and two on head of pairs without center mullions.

G. Temporary Frame Spreaders: Provide for factory- or shop-assembled frames.

PART 3 EXECUTION

3.1 EXAMINATION

A. Verify existing conditions before starting work. Examine substrates, areas, and conditions, with Installer present, for compliance with requirements for installation tolerances and other conditions affecting performance of the Work.

B. Verify that opening sizes and tolerances are acceptable. General Contractor to verify the accuracy of dimensions given to the steel door and frame manufacturer for existing openings or existing frames (strike height, hinge spacing, hinge back set, etc.).
C. Verify that finished walls are in plane to ensure proper door alignment.

3.2 PREPARATION

A. Coat inside of frames to be installed in masonry or to be grouted, with bituminous coating, prior to installation.
B. Coordinate installation of anchorages for hollow metal frames. Furnish setting drawings, templates, and directions for installing anchorages, including sleeves, concrete inserts, anchor bolts, and items with integral anchors. Deliver such items to Project site in time for installation.
C. Remove welded in shipping spreaders installed at factory. Restore exposed finish by grinding, filling, and dressing, as required to make repaired area smooth, flush, and invisible on exposed faces.
D. Prior to installation, adjust and securely brace welded hollow metal frames for square, level, twist, and plumb condition.
E. Tolerances shall comply with SDI-117 "Manufacturing Tolerances Standard Steel Doors and Frames."
F. Drill and tap doors and frames to receive non-template, mortised, and surface-mounted door hardware.

3.3 INSTALLATION

A. Install doors and frames in accordance with manufacturer's instructions and related requirements of specified door and frame standards or custom guidelines indicated. Install hollow metal work plumb, rigid, properly aligned, and securely fastened in place.
B. Install hollow metal frames of size and profile indicated. Comply with ANSI/SDI A250.11.
    1. Set frames accurately in position, plumbed, leveled, aligned, and braced securely until permanent anchors are set. After wall construction is complete and frames properly set and secured, remove temporary braces, leaving surfaces smooth and undamaged. Shim as necessary to comply with installation tolerances.
    2. Floor Anchors: Provide floor anchors for each jamb and mullion that extends to floor, and secure with post-installed expansion anchors.
    3. Masonry Walls: Coordinate installation of frames to allow for solidly filling space between frames and masonry with mortar.
    4. Grout Requirements: Do not grout head of frames unless reinforcing has been installed in head of frame. Do not grout vertical or horizontal closed mullion members.
C. Install fire rated units in accordance with NFPA 80.
D. Coordinate frame anchor placement with wall construction.
E. Grout frames in masonry construction, using hand trowel methods; brace frames so that pressure of grout before setting will not deform frames.
F. Fit hollow metal doors accurately in frames, within clearances specified below. Shim as necessary.
    1. Non-Fire-Rated Standard Steel Doors:
        a. Jambs and Head: 1/8 inch plus or minus 1/16 inch.
        b. Between Edges of Pairs of Doors: 1/8 inch plus or minus 1/16 inch.
        c. Between Bottom of Door and Top of Threshold: Maximum 3/8 inch.
        d. Between Bottom of Door and Top of Finish Floor (No Threshold): Maximum 3/4 inch.
    2. Fire-Rated Doors: Install doors with clearances according to NFPA 80.
G. Install door hardware as specified in Section 08 7100.
H. Comply with glazing installation requirements of Section 08 8000.
I. Touch up damaged factory finishes.

3.4 ADJUSTING AND CLEANING

A. Adjust for smooth and balanced door movement. Check and readjust operating hardware items immediately before final inspection. Leave work in complete and proper operating condition. Remove and replace defective work, including hollow metal work that is warped, bowed, or otherwise unacceptable.

B. Remove grout and other bonding material from hollow metal work immediately after installation.

C. Prime-Coat and Painted Finish Touchup: Immediately after erection, sand smooth rusted or damaged areas of prime coat, or painted finishes, and apply touchup of compatible air drying, rust-inhibitive primer, zinc rich primer (exterior and galvanized openings) or finish paint.

3.5 SCHEDULE

A. Refer to Door and Frame Schedule on the drawings.

END OF SECTION

SECTION 08 1416 - FLUSH WOOD DOORS

PART 1 GENERAL

1.1 SECTION INCLUDES

A. Flush wood doors; flush and flush glazed configuration; fire-rated and non-rated.

1.2 RELATED REQUIREMENTS

A. Section 08 1113 - Hollow Metal Doors and Frames.
B. Section 08 7100 - Door Hardware.

1.3 REFERENCE STANDARDS

A. 16 CFR 1201 - Safety Standard for Architectural Glazing Materials.
B. AWI/AWMAC/WI (AWS) - Architectural Woodwork Standards, 2nd Edition.
C. AWMAC/WI (NAAWS) - North American Architectural Woodwork Standards, U.S. Version 3.1.
D. NFPA 80 - Standard for Fire Doors and Other Opening Protectives.
E. UL 10C - Standard for Positive Pressure Fire Tests of Door Assemblies.
F. UL 752 - Standard for Bullet-Resisting Equipment.

1.4 SUBMITTALS

A. See Section 01 3000 - Administrative Requirements for submittal procedures.
B. Product Data: Indicate door core materials and construction; veneer species, type and characteristics.
C. Shop Drawings: Show doors and frames, elevations, location and size of each door, types, swings, undercuts, beveling, blocking for hardware, factory machining, factory finishing, cutouts for glazing and other details.
   1. For factory-premachined doors, indicate dimensions and locations of cutouts for locksets and other cutouts adjacent to light and louver openings.
D. Samples: Submit two samples of door veneer, 8 by 8 inches in size illustrating wood grain, stain color, and sheen.
   1. Finish sample with same materials proposed for factory-finished doors.
E. Test Reports: Show compliance with specified requirements for the following:
   1. Bullet resistant doors and frames.
F. Warranty, executed in Owner's name.

1.5 QUALITY ASSURANCE

A. Manufacturer Qualifications: Company specializing in manufacturing the products specified in this section, with not less than three years of documented experience.
   1. Company with at least one project within past five years with value of woodwork within at least 20 percent of cost of woodwork for this project.
B. Installer Qualifications: Company specializing in performing work of the type specified in this section, with not less than three years of documented experience.
C. Fire-Rated Wood Doors: Provide wood doors which are identical in materials and construction to units tested in door and frame assemblies per ASTM E 152 and which are labeled and listed for ratings indicated by UL, Warnock Hersey or other testing and inspection agency acceptable to authorities having jurisdiction.

1.6 DELIVERY, STORAGE, AND HANDLING

A. Package, deliver and store doors in accordance with specified quality standard.
B. Accept doors on site in manufacturer's packaging, and inspect for damage.
C. Protect doors with resilient packaging sealed with heat shrunk plastic; do not store in damp or wet areas or areas where sunlight might bleach veneer; seal top and bottom edges with tinted sealer if stored more than one week, and break seal on site to permit ventilation.
D. Identify each door with individual opening numbers which correlate with designation system used on shop drawings for door, frames, and hardware, using temporary, removable or concealed markings.

1.7 WARRANTY

A. See Section 01 7800 - Closeout Submittals for additional warranty requirements.
B. Interior Doors: Provide manufacturer's warranty for the life of the installation.
C. Include coverage for delamination of veneer, warping beyond specified installation tolerances, defective materials, and telegraphing core construction.
D. Contractor's Responsibilities: Replace or refinish doors where Contractor's work contributed to rejection or to voiding of manufacturer's warranty.

PART 2 PRODUCTS

2.1 MANUFACTURERS

A. Wood Veneer Faced Doors:
   1. VT Industries, Inc: www.vtindustries.com/#sle.
   2. Substitutions: Not permitted.
B. Bullet Resistant Wood Doors:
   1. Armortex.
   2. Substitutions: See Section 01 6000 - Product Requirements.

2.2 DOORS AND PANELS

A. Doors: See drawings for locations and additional requirements.
   1. Quality Standard: Custom Grade, Heavy Duty performance, in accordance with AWI/AWMAC/WI (AWS) or AWMAC/WI (NAAWS), unless noted otherwise.
   2. Wood Veneer Faced Doors: 5-ply unless otherwise indicated.
   3. Fire-Rated Doors: Labeled and listed with rating required by a testing and inspection organization acceptable to authority having jurisdiction.
   4. Low-Emitting Materials: Provide doors made with adhesives and composite wood products that do not contain urea-formaldehyde resins.
B. Interior Doors: 1-3/4 inches thick unless otherwise indicated; flush construction.
   1. Provide solid core doors at each location.
   2. Fire Rated Doors: Tested to ratings indicated on drawings in accordance with UL 10C - Positive Pressure; Underwriters Laboratories Inc (UL) or Intertek/Warnock Hersey (WHI) labeled without any visible seals when door is open.
   3. Bullet Resistant Doors: UL 752, Level 3.
   4. Wood veneer facing with factory transparent finish as indicated on drawings.

2.3 DOOR AND PANEL CORES

A. Non-Rated Solid Core and 20 Minute Rated Doors: Type particleboard core (PC), plies and faces as indicated.
B. Fire-Rated Doors: Mineral core type, with fire resistant composite core (FD), plies and faces as indicated above; with core blocking as required to provide adequate anchorage of hardware without through-bolting. At hinge stiles, provide manufacturer's standard laminated-edge construction with improved screw-holding capability and split resistance and with outer stile matching face veneer.
C. Bullet Resistant Doors: Equivalent to type, with bonded particleboard core (PC); rating; plies and faces as indicated above.

2.4 DOOR FACINGS

A. Manufacturer's standard 5-ply or 7-ply face panels, unless otherwise indicated.
B. Veneer Facing for Transparent Finish: White birch, veneer grade in accordance with quality standard indicated, plain sliced (flat cut), with book match between leaves of veneer, balance match of spliced veneer leaves assembled on door or panel face.
   1. Vertical Edges: Same species as face veneer.

2.5 DOOR CONSTRUCTION

A. Fabricate doors in accordance with door quality standard specified and comply with following requirements:
   1. Factory-prefit and premachine doors to fit frame opening sizes indicated..
   2. Comply with tolerance requirements of AWI for prefitting. Comply with final hardware schedules and door frame shop drawings and with hardware templates.
   3. Coordinate measurements of hardware mortises in frames to verify dimensions and alignment before proceeding with factory pre-machining.
   4. Field verify all door heights before fabrication.

B. Cores Constructed with stiles and rails:
   1. Provide solid blocks at lock edge for hardware reinforcement.
   2. Provide solid blocking for other throughbolted hardware.

C. Glazed Openings: Non-removable stops on non-secure side; sizes and configurations as indicated on drawings.

D. Wood Beads for Light Openings in Wood Doors:
   1. Wood Species: Same species as door faces.
   2. Profile: Flush rectangular beads.
   3. At 20-minute, fire-rated, wood-core doors, provide wood beads and metal glazing clips approved for such use.

E. Openings: Cut and trim openings through doors to comply with applicable requirements of referenced standards for kind(s) of doors required.
   1. Light Openings: Trim openings with moldings of material and profile indicated.

F. Factory machine doors for hardware other than surface-mounted hardware, in accordance with hardware requirements and dimensions.

G. Factory fit doors for frame opening dimensions identified on shop drawings, with edge clearances in accordance with specified quality standard.

H. Provide edge clearances in accordance with the quality standard specified.

2.6 FINISHES - WOOD VENEER DOORS

A. Comply with referenced AWI quality standard including Section 1500 "Factory Finishing". Sealing of tops and bottoms of doors shall be included in the finishing process.

B. Finish work in accordance with AWI/AWMAC/WI (AWS) or AWMAC/WI (NAAWS), Section 5 - Finishing for grade specified and as follows:
   1. Transparent:
      a. System - 12, Polyurethane, Water-based.
      b. Stain: See Finish Schedule (WD
      c. Sheen: Satin.

C. Factory finish doors in accordance with approved sample.

2.7 ACCESSORIES

A. Hollow Metal Door Frames: See Section 08 1113.

B. Glazed Openings:
   1. Laminated Safety Glass: Comply with 16 CFR 1201 test requirements for Category II.
   2. Fire-Protection-Rated Glass: Safety Certification, 16 CFR 1201, Category II.
   3. Tint: Clear.

PART 3 EXECUTION

3.1 EXAMINATION

A. Verify existing conditions before starting work.

B. Verify that opening sizes and tolerances are acceptable.

C. Verify that frames comply with indicated requirements for type, size, location, and swing characteristics and have been installed with plumb jambs and level heads.
D. Reject doors with defects
E. Do not install doors in frame openings that are not plumb or are out-of-tolerance for size or alignment.
F. Do not deliver or install doors until conditions for temperature and relative humidity have been stabilized and will be maintained in storage and installation areas during remainder of construction period to comply with the following requirements applicable to project's geographical location:
G. Do not proceed with installation until unsatisfactory conditions have been corrected.

3.2 INSTALLATION

A. Install doors in accordance with manufacturer's instructions and specified quality standard.
   1. Install fire-rated doors in accordance with NFPA 80 requirements.
B. Factory-Finished Doors: Do not field cut or trim; if fit or clearance is not correct, replace door.
C. Use machine tools to cut or drill for hardware.
D. Coordinate installation of doors with installation of frames and hardware.

3.3 TOLERANCES

A. Comply with specified quality standard for fit and clearance tolerances.
B. Comply with specified quality standard for telegraphing, warp, and squareness.

3.4 ADJUSTING AND PROTECTING

A. Adjust doors for smooth and balanced door movement. Rehang or replace doors which do not swing or operate freely
B. Refinish or replace doors damaged during installation
C. Adjust closers for full closure.
D. Protect doors as recommended by door manufacturer to ensure that wood doors will be without damage or deterioration at time of Substantial Completion.

END OF SECTION

SECTION 08 3613 - SECTIONAL DOORS

PART 1 GENERAL

1.1 SECTION INCLUDES

A. Overhead sectional doors, electrically operated.
B. Operating hardware and supports.
C. Electrical controls.

1.2 REFERENCE STANDARDS

A. 16 CFR 1201 - Safety Standard for Architectural Glazing Materials.
B. ANSI Z97.1 - American National Standard for Safety Glazing Materials Used in Buildings - Safety Performance Specifications and Methods of Test.
C. ASTM A653/A653M - Standard Specification for Steel Sheet, Zinc-Coated (Galvanized) or Zinc-Iron Alloy-Coated (Galvannealed) by the Hot-Dip Process.
D. ASTM C1172 - Standard Specification for Laminated Architectural Flat Glass.
E. ASTM E283/E283M - Standard Test Method for Determining Rate of Air Leakage Through Exterior Windows, Skylights, Curtain Walls, and Doors Under Specified Pressure Differences Across the Specimen.
F. ASTM E330/E330M - Standard Test Method for Structural Performance of Exterior Windows, Doors, Skylights and Curtain Walls by Uniform Static Air Pressure Difference.
G. DASMA 102 - American National Standard Specifications for Sectional Doors.
H. NEMA ICS 2 - Industrial Control and Systems Controllers, Contactors and Overload Relays Rated 600 Volts.
I. NEMA 250 - Enclosures for Electrical Equipment (1000 Volts Maximum).
J. NFPA 70 - National Electrical Code.
K. UL 325 - Standard for Door, Drapery, Gate, Louver, and Window Operators and Systems.

1.3 SUBMITTALS

A. See Section 01 3000 - Administrative Requirements for submittal procedures.
B. Shop Drawings: Indicate opening dimensions and required tolerances, connection details, anchorage spacing, hardware locations, and installation details.
C. Product Data: Show component construction, anchorage method, and hardware.
D. Specimen warranty.

1.4 WARRANTY

A. See Section 01 7800 - Closeout Submittals for warranty requirements.
B. Extended Correction Period: Correct defective work within a 2-year period commencing on Date of Substantial Completion.
C. Manufacturer Warranty: Provide 5-year manufacturer warranty for electric operating equipment. Complete forms in Owner's name and register with manufacturer.

PART 2 PRODUCTS

2.1 MANUFACTURERS

A. Sectional Doors:
   1. Overhead Door Corporation; Model 591: www.overheaddoor.com/#sle.
   2. Substitutions: See Section 01 6000 - Product Requirements.

2.2 PERFORMANCE REQUIREMENTS

A. Performance: Withstand positive and negative wind loads equal to 1.5 times design wind loads specified by local code without damage or permanent set, when tested in accordance with ASTM E330/E330M, using 10 second duration of maximum load.

B. Air Leakage Rate: Less than 0.40 cfm/sq ft when tested in accordance with ASTM E283/E283M at test pressure difference of 1.57 psf.
C. Thermal Transmittance: U-factor of 0.31 Btu/hr sq ft degrees F, maximum, in accordance with DASMA 102.

2.3 STEEL DOORS

A. Doors: Flush steel, insulated; standard lift operating style with track and hardware; complying with DASMA 102, Commercial application.
   1. Door Panels: Steel construction; outer steel sheet of 20 gauge, 0.0359 inch minimum thickness, flush profile; inner steel sheet of 20 gauge, 0.0359 inch minimum thickness, flat profile; core reinforcement sheet steel roll formed to channel shape, rabbeted weather joints at meeting rails; polyurethane insulation.
   2. Door Nominal Thickness: 2 inches thick.
   3. Exterior Finish:
      a. Factory finished with acrylic baked enamel; color as selected by Architect from manufacturer's full line.
   4. Interior Finish:
      a. Factory finished with acrylic baked enamel; color as selected from manufacturers standard line.
   5. Glazed Lites: Three glazed lights per panel, 3 row; set in place with resilient glazing channel.
   6. Electric Operation: Electric Control Station, Remote operators, and access control.

2.4 COMPONENTS

A. Track: Rolled galvanized steel, 0.090 inch minimum thickness; 2 inch wide, continuous one piece per side; galvanized steel mounting brackets 1/4 inch thick.
B. Lift Mechanism: Torsion spring on cross head shaft, with braided galvanized steel lifting cables.
C. Sill Weatherstripping: Resilient hollow rubber strip, one piece; fitted to bottom of door panel, full length contact.
D. Jamb Weatherstripping: Roll formed steel section full height of jamb, fitted with resilient weatherstripping, placed in moderate contact with door panels.
E. Head Weatherstripping: EPDM rubber seal, one piece full length.
F. Panel Joint Weatherstripping: Neoprene foam seal, one piece full length.
G. Lock: Inside center mounted, adjustable keeper, spring activated latch bar with feature to retain in locked or retracted position; interior and exterior handle.

2.5 MATERIALS

A. Sheet Steel: Hot-dipped galvanized steel sheet, ASTM A653/A653M, with G60/Z180 coating, plain surface.
B. Laminated Safety Glass: ASTM C1172 with at least 0.030 inch thick polyvinyl butyral (PVB) interlayer, and in compliance with safety criteria 16 CFR 1201 Categories 1 and 2, and ANSI Z97.1.
C. Insulation: Foamed-in-place polyurethane.
   1. Same thickness as core framing members.

2.6 ELECTRIC OPERATION

A. Electric Operators:
   1. Mounting: Side mounted on cross head shaft.
   2. Motor Enclosure:
   3. Motor Rating: 1/3 hp; continuous duty.
   4. Motor Voltage: 120 volts, single phase, 60 Hz.
   5. Motor Controller: NEMA ICS 2, full voltage, reversing magnetic motor starter.
   6. Controller Enclosure: NEMA 250, Type 1.
   7. Opening Speed: 12 inches per second.

8. Brake: Adjustable friction clutch type, activated by motor controller.
9. Manual override in case of power failure.
10. See Section 26 0583 for electrical connections.

B. Wiring Terminations: Provide terminal lugs to match branch circuit conductor quantities, sizes, and materials indicated; enclose terminal lugs in terminal box sized to comply with NFPA 70.

C. Control Station: Provide standard three button (Open-Close-Stop) momentary-contact control device for each operator complying with UL 325.
   1. 24 volt circuit.
   2. Surface mounted, at interior door jamb.
   3. Entrapment Protection Devices: Provide sensing devices and safety mechanisms complying with UL 325.
      a. Primary Device: Provide electric sensing edge, wireless sensing, NEMA 1 photo eye sensors, or NEMA 4X photo eye sensors as required with momentary-contact control device.

D. Safety Edge: Located at bottom of sectional door panel, full width; electro-mechanical sensitized type, wired to stop and reverse door direction upon striking object; hollow neoprene covered to provide weatherstrip seal.

E. Provide interconnection to security system.

PART 3 EXECUTION

3.1 EXAMINATION

A. Verify that wall openings are ready to receive work and opening dimensions and tolerances are within specified limits.

B. Verify that electric power is available and of the correct characteristics.

3.2 INSTALLATION

A. Install door unit assembly in accordance with manufacturer's instructions.

B. Anchor assembly to wall construction and building framing without distortion or stress.

C. Securely brace door tracks suspended from structure. Secure tracks to structural members only.

D. Fit and align door assembly including hardware.

E. Coordinate installation of electrical service. Complete power and control wiring from disconnect to unit components.

3.3 TOLERANCES

A. Maximum Variation from Plumb: 1/16 inch.

B. Maximum Variation from Level: 1/16 inch.

C. Longitudinal or Diagonal Warp: Plus or minus 1/8 inch from 10 ft straight edge.

D. Maintain dimensional tolerances and alignment with adjacent work.

3.4 ADJUSTING

A. Adjust door assembly for smooth operation and full contact with weatherstripping.

3.5 CLEANING

A. Clean doors and frames and glazing.

B. Remove temporary labels and visible markings.

3.6 PROTECTION

A. Protect installed products from damage until Date of Substantial Completion.

B. Do not permit construction traffic through overhead door openings after adjustment and cleaning.

END OF SECTION

SECTION 08 4313 - ALUMINUM-FRAMED STOREFRONTS

PART 1 GENERAL

1.1 SECTION INCLUDES

A. Aluminum-framed storefront, with vision glass.
B. Aluminum doors and frames.
C. Weatherstripping.

1.2 RELATED REQUIREMENTS

A. Section 08 7100 - Door Hardware: Hardware items other than specified in this section.

1.3 REFERENCE STANDARDS

A. AAMA 611 - Voluntary Specification for Anodized Architectural Aluminum.
B. AAMA 2605 - Voluntary Specification, Performance Requirements and Test Procedures for Superior Performing Organic Coatings on Aluminum Extrusions and Panels (with Coil Coating Appendix).
C. ASTM B221 - Standard Specification for Aluminum and Aluminum-Alloy Extruded Bars, Rods, Wire, Profiles, and Tubes.
D. ASTM B221M - Standard Specification for Aluminum and Aluminum-Alloy Extruded Bars, Rods, Wire, Profiles, and Tubes (Metric).
E. ASTM E283/E283M - Standard Test Method for Determining Rate of Air Leakage Through Exterior Windows, Skylights, Curtain Walls, and Doors Under Specified Pressure Differences Across the Specimen.
F. ASTM E330/E330M - Standard Test Method for Structural Performance of Exterior Windows, Doors, Skylights and Curtain Walls by Uniform Static Air Pressure Difference.

1.4 SUBMITTALS

A. See Section 01 3000 - Administrative Requirements for submittal procedures.
B. Product Data: Provide component dimensions, describe components within assembly, anchorage and fasteners, glass and infill, door hardware, and internal drainage details.
C. Shop Drawings: Indicate system dimensions, framed opening requirements and tolerances, affected related work, expansion and contraction joint location and details, and field welding required.
D. Hardware Schedule: Complete itemization of each item of hardware to be provided for each door, cross-referenced to door identification numbers in Contract Documents.

1.5 QUALITY ASSURANCE

A. Manufacturer Qualifications: Company specializing in performing work of type specified and with at least three years of documented experience.
B. Installer Qualifications: Company specializing in performing work of type specified and with at least three years of documented experience.

1.6 FIELD CONDITIONS

A. Do not install sealants when ambient temperature is less than 40 degrees F. Maintain this minimum temperature during and 48 hours after installation.

1.7 WARRANTY

A. See Section 01 7800 - Closeout Submittals for additional warranty requirements.
B. Provide five year manufacturer warranty against failure of glass seal on insulating glass units, including interpane dusting or misting. Include provision for replacement of failed units.
C. Provide five year manufacturer warranty against excessive degradation of exterior finish. Include provision for replacement of units with excessive fading, chalking, or flaking.

PART 2 PRODUCTS

2.1 ALUMINUM-FRAMED STOREFRONT

A. Aluminum-Framed Storefront: Factory fabricated, factory finished aluminum framing members with infill, and related flashings, anchorage and attachment devices.
   1. Glazing Position: Front-set.
   2. Finish: Class I color anodized.
      a. Factory finish all surfaces that will be exposed in completed assemblies.
   3. Finish Color: Black.
   4. Fabrication: Joints and corners flush, hairline, and weatherproof, accurately fitted and secured; prepared to receive anchors and hardware; fasteners and attachments concealed from view; reinforced as required for imposed loads.
   5. Construction: Eliminate noises caused by wind and thermal movement, prevent vibration harmonics, and prevent "stack effect" in internal spaces.
   6. System Internal Drainage: Drain to the exterior by means of a weep drainage network any water entering joints, condensation occurring in glazing channel, and migrating moisture occurring within system.
   7. Expansion/Contraction: Provide for expansion and contraction within system components caused by cycling temperature range of 170 degrees F over a 12 hour period without causing detrimental effect to system components, anchorages, and other building elements.
   8. Movement: Allow for movement between storefront and adjacent construction, without damage to components or deterioration of seals.
   9. Perimeter Clearance: Minimize space between framing members and adjacent construction while allowing expected movement.
   10. Maintain continuous air barrier and/or vapor retarder seal throughout assembly, primarily in line with inside pane of glazing and inner sheet of infill panel, and heel bead of glazing compound.

B. Performance Requirements
   1. Wind Loads: Design and size components to withstand the specified load requirements without damage or permanent set, when tested in accordance with ASTM E330/E330M, using loads 1.5 times the design wind loads and 10 second duration of maximum load.
      a. Member Deflection: Limit member deflection to flexure limit of glass in any direction, with full recovery of glazing materials.
   2. Air Leakage: 0.06 cfm/sq ft maximum leakage of storefront wall area when tested in accordance with ASTM E283/E283M at 1.57 psf pressure difference.

2.2 COMPONENTS

A. Aluminum Framing Members: Tubular aluminum sections, drainage holes and internal weep drainage system.
   1. Framing members for interior applications need not be thermally broken.
   2. Glazing Stops: Flush.
   3. Cross-Section: As indicated on drawings.

B. Infill Panels: Insulated, spandrel glass, with edges formed to fit glazing channel and sealed.
   1. Total Nominal Thickness: 1 inch.
   2. Core: Glass fiber insulation core with U-value of 0.38.
   3. Finish: Same as storefront.

C. Swing Doors: Glazed aluminum.
   1. Thickness: 1-3/4 inches.
   2. Top Rail: 6 inches wide.

3. Vertical Stiles: 6 inches wide.
4. Bottom Rail: 10 inches wide.
5. Glazing Stops: Square.
6. Finish: Same as storefront.

D. Interior Sliding Storefront Doors: Full glazed extruded aluminum frame and operable panels; manual operation; bottom rollers; flat or recessed sill.
1. Configuration and Size: As indicated on drawings.
2. Glazing Thickness: 1/4 inch.
3. Stile Width: 6 inches.
4. Frame Face Width: 1-1/2 inches.
5. Provide deadlock keyed both sides on each operable panel.

2.3 MATERIALS

A. Extruded Aluminum: ASTM B221 (ASTM B221M).
B. Fasteners: Stainless steel.
C. Glazing Gaskets: Type to suit application to achieve weather, moisture, and air infiltration requirements.

2.4 FINISHES

A. Class I Color Anodized Finish: AAMA 611 AA-M12C22A42 Integrally colored anodic coating not less than 0.7 mils thick.
B. Superior Performing Organic Coatings System: Manufacturer's standard multi-coat superior performing organic coatings system complying with AAMA 2605, including at least 70 percent polyvinylidene fluoride (PVDF) resin, and at least 80 percent of aluminum extrusion and panels surfaces having minimum total dry film thickness (DFT) of 1.2 mils, 0.0012 inch.
C. Color: Black.
D. Touch-Up Materials: As recommended by coating manufacturer for field application.

2.5 HARDWARE

A. For each door, include weatherstripping, sill sweep strip, and threshold.
B. Other Door Hardware: See Architectural Drawings.
C. Weatherstripping: Wool pile, continuous and replaceable; provide on all doors.
D. Sill Sweep Strips: Resilient seal type, retracting, of neoprene; provide on all doors.
E. Threshold: Extruded aluminum, one piece per door opening, ribbed surface; provide on all doors.

PART 3 EXECUTION

3.1 EXAMINATION

A. Verify dimensions, tolerances, and method of attachment with other work.
B. Verify that storefront wall openings and adjoining water-resistive and/or air barrier seal materials are ready to receive work of this section.

3.2 INSTALLATION

A. Install wall system in accordance with manufacturer's instructions.
B. Attach to structure to permit sufficient adjustment to accommodate construction tolerances and other irregularities.
C. Provide alignment attachments and shims to permanently fasten system to building structure.
D. Align assembly plumb and level, free of warp or twist. Maintain assembly dimensional tolerances, aligning with adjacent work.
E. Provide thermal isolation where components penetrate or disrupt building insulation.
F. Install sill flashings. Turn up ends and edges; seal to adjacent work to form water tight dam.

G. Where fasteners penetrate sill flashings, make watertight by seating and sealing fastener heads to sill flashing.
H. Pack fibrous insulation in shim spaces at perimeter of assembly to maintain continuity of thermal barrier.
I. Set thresholds in bed of sealant and secure.
J. Touch-up minor damage to factory applied finish; replace components that cannot be satisfactorily repaired.

3.3 TOLERANCES

A. Maximum Variation from Plumb: 0.06 inch per 3 feet non-cumulative or 0.06 inch per 10 feet, whichever is less.
B. Maximum Misalignment of Two Adjoining Members Abutting in Plane: 1/32 inch.

3.4 ADJUSTING

A. Adjust operating hardware and sash for smooth operation.

3.5 PROTECTION

A. Protect installed products from damage until Date of Substantial Completion.

END OF SECTION

SECTION 08 5653 - SECURITY WINDOWS

PART 1 GENERAL

1.1 SECTION INCLUDES

A. Security transaction windows with pass-through device.

1.2 REFERENCE STANDARDS

A. AAMA 611 - Voluntary Specification for Anodized Architectural Aluminum.
B. ASTM B221 - Standard Specification for Aluminum and Aluminum-Alloy Extruded Bars, Rods, Wire, Profiles, and Tubes.
C. ASTM B221M - Standard Specification for Aluminum and Aluminum-Alloy Extruded Bars, Rods, Wire, Profiles, and Tubes (Metric).
D. ASTM E329 - Standard Specification for Agencies Engaged in Construction Inspection, Testing, or Special Inspection.
E. SSPC-Paint 33 - Coal Tar Mastic Coating, Cold-Applied.
F. UL 752 - Standard for Bullet-Resisting Equipment.

1.3 SUBMITTALS

A. See Section 01 3000 - Administrative Requirements for submittal procedures.
B. Product Data: Manufacturer's published data showing materials, construction details, dimensions of components, and finishes.
C. Shop Drawings: Drawings prepared specifically for this project, showing plans, elevations, sections, details of construction, anchorage to other work, hardware, and glazing.
    1. For new work show required opening dimensions and allowance for field deviation.
    2. For field glazed windows, include detailed instructions for glazing installation.
D. Test Reports: Test reports for specific window model and glazing to be furnished, showing compliance with specified requirements; window and glazing may be tested separately, provided window test sample adequately simulates the glazing to be used.
    1. Include testing agency qualifications.
    2. For structural, forced entry, and ballistic tests, provide details on method of anchorage to test frame.
E. Samples for Selection of Applied Finishes: Color charts for factory finishes.

1.4 QUALITY ASSURANCE

A. Manufacturer Qualifications: Firm with at least 5 years experience in the manufacture of windows of the type specified and able to provide test reports showing that their standard manufactured products meet the specified requirements; custom designed products not acceptable.
B. Testing Agency Qualifications: Independent testing agency able to show experience in conducting tests of the type specified and:
    1. Qualified according to ASTM E329 for testing tool-resisting steel.

PART 2 PRODUCTS

2.1 MANUFACTURERS

A. Security Transaction Windows with Pass-Through Device:
    1. Armortex WI-TW-AL-SP.
    2. Substitutions: See Section 01 6000 - Product Requirements.

2.2 ASSEMBLIES

A. Security and Detention Windows:

1. Dimensions, profiles, features, and performance specified and indicated on drawings are required; do not deviate unless specifically approved by Architect under substitution procedures; see Section 01 6000.
2. Design to fit openings indicated on drawings; design to accommodate deviation of actual construction from dimensions indicated on drawings.
3. Fabricate frames and sash with corners mitered or coped full depth with concealed welded joints.
4. Design anchorages to provide performance equivalent to that required for window unit; provide anchorages at least equivalent to those by which the tested units were anchored to the test frame.
5. Separate dissimilar metals to prevent corrosion by galvanic action by painting contact surfaces with primer or with sealant or tape recommended by manufacturer for the purpose.
6. Weld components before finishing and in concealed locations, to greatest extent possible; minimize distortion and discoloration of finish; remove residue of welding; grind exposed welds smooth and finish to match.
7. Label units to indicate which side is which, such as inside/outside or secure/non-secure; use labels that are removable after installation but durable enough not to be lost during delivery, storage, handling, and installation.

2.3 SECURITY TRANSACTION WINDOWS WITH PASS-THROUGH DEVICE

A. Security Transaction Windows with Pass-Though Device:
   1. Location: Built within exterior and interior wall, as indicated on drawings.
   2. Type of Use: Walk-up.
   3. Ballistic Resistance: Tested to meet UL 752, Level 3.
   4. Window Type: Fixed.
      a. Frame Material: Aluminum.
         1) Finish: Color anodized.
   5. Glazing: Single (monolithic), clear, and ballistic resistant.
   6. Pass-Through Device: Deal tray built into window sill.
   7. Communication: Standard talk-through portal.

2.4 ASSEMBLY COMPONENTS

A. Aluminum Framing: ASTM B221 (ASTM B221M) extrusions of alloy and temper selected by manufacturer for strength, corrosion resistance, and finish required; not less that 1/8 inch thick at any location of frame and sash members.
B. Frame Anchors: Mild steel plates, shapes, or bars, concealed in completed construction; provide anchorage devices as necessary to securely fasten windows to adjacent construction; use security fasteners for exposed anchors.
   1. Provide minimum of two anchors per side of window plus one additional anchor for each 18 inches or fraction thereof more than 36 inches in height or width.
C. Glazing Seals: Factory installed; molded EPDM or neoprene compressible gaskets and compression strips.
D. Deal Trays: Formed stainless steel, recessed into counter or sill for mounting under glazing frame.
   1. Style: Plain curved recess welded into counter or sill.
   2. Clear Opening Height: 1-1/2 inches.
   3. Tray Dimensions: 12 by 8 inches, wide by deep.
E. Bituminous Paint: Cold-applied asbestos-free asphalt mastic, complying with SSPC-Paint 33; 30 mils, 0.030 inch minimum thickness per coat.

2.5 FINISHES

A. Class I Color Anodized Finish: AAMA 611 AA-M12C22A42 Integrally colored anodic coating not less than 0.7 mils thick.

B. Color: As selected by Architect from manufacturer's full range.

PART 3 EXECUTION

3.1 EXAMINATION

A. Verify that window openings are ready for installation of windows.
B. Notify Architect if conditions are not suitable for installation of windows; do not proceed until conditions are satisfactory.

3.2 INSTALLATION

A. Install in accordance with manufacturer's instructions and drawing details.
B. Install windows in correct orientation (inside/outside or secure/non-secure).
C. Anchor windows securely in manner so as to achieve performance specified.
D. Separate metal members from concrete and masonry using bituminous paint.
E. Set sill members and sill flashing in continuous bead of sealant.

3.3 CLEANING

A. Clean exposed surfaces promptly after installation without damaging finishes.
B. Remove and replace defective work.

3.4 CLOSEOUT ACTIVITIES

A. Demonstrate operation and maintenance to designated Owner personnel.

END OF SECTION

SECTION 08 7100 - DOOR HARDWARE

PART 1 GENERAL

1.1 SECTION INCLUDES

A. Hardware for wood, aluminum, and hollow metal doors.
B. Hardware for fire-rated doors.
C. Electrically operated and controlled hardware.
D. Lock cylinders for doors that hardware is specified in other sections.
E. Thresholds.
F. Weatherstripping and gasketing.
G. Gate locks.

1.2 RELATED REQUIREMENTS

A. Section 08 0671 - Door Hardware Schedule: Schedule of door hardware sets.
B. Section 08 1113 - Hollow Metal Doors and Frames.
C. Section 08 4313 - Aluminum-Framed Storefronts: Door hardware, except as noted in section.

1.3 REFERENCE STANDARDS

A. ADA Standards - Americans with Disabilities Act (ADA) Standards for Accessible Design.
B. BHMA A156.1 - Standard for Butts and Hinges.
C. BHMA A156.2 - American National Standard for Bored and Preassembled Locks & Latches.
D. BHMA A156.3 - Exit Devices.
E. BHMA A156.5 - Cylinders and Input Devices for Locks.
F. BHMA A156.13 - American National Standard for Mortise Locks & Latches Series 1000.
G. BHMA A156.15 - Release Devices - Closer Holder, Electromagnetic and Electromechanical.
H. BHMA A156.16 - Standard for Auxiliary Hardware.
I. BHMA A156.30 - High Security Cylinders.
J. BHMA A156.34 - Standard for Bored Locks and Mortise Locks with Ligature Resistant Trim.
K. DHI (H&S) - Sequence and Format for the Hardware Schedule.
L. DHI (LOCS) - Recommended Locations for Architectural Hardware for Standard Steel Doors and Frames.
M. DHI WDHS.3 - Recommended Locations for Architectural Hardware for Flush Wood Doors.
N. ICC A117.1 - Accessible and Usable Buildings and Facilities.
O. NFPA 70 - National Electrical Code.
P. NFPA 80 - Standard for Fire Doors and Other Opening Protectives.
Q. NFPA 101 - Life Safety Code.
R. NFPA 105 - Standard for Smoke Door Assemblies and Other Opening Protectives.
S. NFPA 252 - Standard Methods of Fire Tests of Door Assemblies.
T. UL (DIR) - Online Certifications Directory.
U. UL 10C - Standard for Positive Pressure Fire Tests of Door Assemblies.
V. UL 437 - Standard for Key Locks.

1.4 ADMINISTRATIVE REQUIREMENTS

A. Coordinate the manufacture, fabrication, and installation of products that door hardware is installed on.
B. Sequence installation to ensure utility connections are achieved in an orderly and expeditious manner.
C. Furnish templates for door and frame preparation to manufacturers and fabricators of products requiring internal reinforcement for door hardware.
D. Keying Requirements Meeting:
   1. Schedule meeting at project site prior to Contractor occupancy.
   2. Attendance Required:
      a. Contractor.

b. Owner.
c. Architect.
d. Installer's Architectural Hardware Consultant (AHC).
e. Hardware Installer.
f. Owner's Security Consultant.

3. Agenda:
   a. Establish keying submittal schedule and update requirements.
4. Incorporate "Keying Requirements Meeting" decisions into keying submittal upon review of door hardware keying system including, but not limited to, the following:
5. Record minutes and distribute copies within two days after meeting to participants, with two copies to Architect, Owner, participants, and those affected by decisions made.
6. Deliver established keying requirements to manufacturers.

1.5 SUBMITTALS

A. See Section 01 3000 - Administrative Requirements for submittal procedures.
B. Product Data: Manufacturer's catalog literature for each type of hardware, marked to clearly show products to be furnished for this project, and includes construction details, material descriptions, finishes, and dimensions and profiles of individual components.
C. Shop Drawings - Door Hardware Schedule: Submit detailed listing that includes each item of hardware to be installed on each door. Use door numbering scheme as included in Contract Documents.
   1. Prepared by or under supervision of Architectural Hardware Consultant (AHC).
   2. Comply with DHI (H&S) using door numbers and hardware set numbers as indicated in construction documents.
   3. List groups and suffixes in proper sequence.
   4. Provide complete description for each door listed.
   5. Provide manufacturer name, product names, and catalog numbers; include functions, types, styles, sizes and finishes of each item.
   6. Include account of abbreviations and symbols used in schedule.
D. Shop Drawings - Electrified Door Hardware: Submit diagrams for power, signal, and control wiring for electrified door hardware that include details of interface with building safety and security systems. Provide elevations and diagrams for each electrified door opening as follows:
   1. Prepared by or under supervision of Architectural Hardware Consultant (AHC) and Electrified Hardware Consultant (EHC).
   2. Elevations: Submit front and back elevations of each door opening showing electrified devices with connections installed and an operations narrative describing how opening operates from either side at any given time.
   3. Diagrams: Submit point-to-point wiring diagram that shows each device in door opening system with related colored wire connections to each device.
E. Keying Schedule:
   1. Submit three (3) copies of Keying Schedule in compliance with requirements established during Keying Requirements Meeting unless otherwise indicated.
F. Specimen warranty.
G. Maintenance Materials and Tools: Furnish the following for Owner's use in maintenance of project.
   1. See Section 01 6000 - Product Requirements, for additional provisions.
   2. Lock Cylinders: Ten for each master keyed group.
   3. Tools: One set of each special wrench or tool applicable for each different or special hardware component, whether supplied by hardware component manufacturer or not.

1.6 QUALITY ASSURANCE

A. Standards for Fire-Rated Doors: Maintain one copy of each referenced standard on site, for use by Architect and Contractor.

B. Manufacturer Qualifications: Company specializing in manufacturing products specified in this section with minimum five years of documented experience.
C. Installer Qualifications: Company specializing in performing work of the type specified for commercial door hardware with at least three years of documented experience.
D. Supplier Qualifications: Company with certified Architectural Hardware Consultant (AHC) and Electrified Hardware Consultant (EHC) to assist in work of this section.
E. Source Limitations: Obtain each type and variety of door hardware specified in this section from a single source unless otherwise indicated.
   1. Electrified modifications or enhancements made to a source manufacturer's product line by a secondary or third party source will not be accepted.
   2. Provide electromechanical door hardware from the same manufacturer as mechanical door hardware, unless otherwise indicated.

1.7 DELIVERY, STORAGE, AND HANDLING

A. Inventory door hardware on receipt and provide secure lock-up and shelving for door hardware delivered to Project site. Do not store electronic access control hardware, software, or accessories at Project site without prior authorization.
B. Tag each item or package separately with identification related to the final Door Hardware Schedule, and include basic installation instructions with each item or package.
C. Deliver, as applicable, permanent keys, cylinders, cores, access control credentials, software and related accessories directly to Owner via registered mail or overnight package service.

1.8 COORDINATION

A. Templates: obtain and distribute to the parties involved templates for doors, frames, and other work specified to be factory prepared for installing standard and electrified hardware. Check Shop Drawings of other work to confirm that adequate provisions are made for locating and installing hardware to comply with indicated requirements.
B. Door Hardware and Electrical Connections: Coordinate the layout and installation of scheduled electrified door hardware and related access control equipment with required connections to source power junction boxes, low voltage power supplies, detection and monitoring hardware, and fire and detection alarm systems.
C. Door and Frame Preparation: Doors and corresponding frames are to be prepared, reinforced and pre-wired (if applicable) to receive the installation of the specified electrified, monitoring, signaling and access control system hardware without additional in-field modifications.

1.9 WARRANTY

A. See Section 01 7800 - Closeout Submittals for additional warranty requirements.
B. Manufacturer's Warranty: Provide warranty against defects in material and workmanship for period indicated. Complete forms in Owner's name and register with manufacturer.
   1. Closers: Five years, minimum.
   2. Exit Devices: Three years, minimum.
   3. Locksets and Cylinders: Three years, minimum.
   4. Other Hardware: Two years, minimum.

PART 2 PRODUCTS

2.1 DESIGN AND PERFORMANCE CRITERIA

A. Provide specified door hardware as required to make doors fully functional, compliant with applicable codes, and secure to extent indicated.
B. Provide individual items of single type, of same model, and by same manufacturer.
C. Provide door hardware products that comply with the following requirements:
   1. Applicable provisions of federal, state, and local codes.

2. Accessibility: ADA Standards and ICC A117.1.
3. Applicable provisions of NFPA 101.
4. Fire-Rated Doors: NFPA 80, listed and labeled by qualified testing agency for fire protection ratings indicated, based on testing at positive pressure in accordance with NFPA 252 or UL 10C.
5. Hardware on Fire-Rated Doors: Listed and classified by UL (DIR) as suitable for application indicated.

D. Lock Function: Provide lock and latch function numbers and descriptions of manufacturer's series. See Door Hardware Schedule.

E. Fasteners:
1. Provide fasteners of proper type, size, quantity, and finish that comply with commercially recognized standards for proposed applications.
   a. Aluminum fasteners are not permitted.
   b. Provide Phillips flat-head screws with heads finished to match door surface hardware unless otherwise indicated.
2. Fire-Rated Applications: Comply with NFPA 80.
   a. Provide wood or machine screws for hinges mortised to doors or frames, strike plates to frames, and closers to doors and frames.
   b. Provide steel through bolts for attachment of surface mounted closers, hinges, or exit devices to door panels unless proper door blocking is provided.

2.2 BUTT HINGES

A. Manufacturers:
1. McKinney; an Assa Abloy Group company; TA/T4A Series, 5-knuckle: www.assaabloydss.com/#sle.
2. Hager Companies; BB Series, 5-knuckle: www.hagerco.com/#sle.
3. Ives; 5BB Series, 5-knuckle.
4. Substitutions: See Section 01 6000 - Product Requirements.

B. Hinges: BHMA A156.1, Grade 1 butt hinges with number of hinge knuckles and other options as specified in the Door Hardware Sets.
1. Provide hinges on every swinging door.
2. Provide following quantity of butt hinges for each door:
   a. Doors up to 60 inches High: Two hinges.
   b. Doors From 60 inches High up to 90 inches High: Three hinges.
   c. Doors 90 inches High up to 120 inches High: Four hinges.
   d. Doors over 120 inches High: One additional hinge per each additional 30 inches in height.
3. Hinge Size: Provide the following, unless otherwise indicated, with hinge widths sized for door thickness and clearances required:
   a. Widths up to 3'-0": 4-1/2" standard or heavy weight as specified.
   b. Sizes from 3'-1" to 4'-0": 5" standard or heavy weight as specified.
4. Hinge Weight and Base Material: Unless otherwise indicated, provide the following:
   a. Exterior Doors: Heavy weight, non-ferrous, ball bearing or oil impregnated bearing hinges unless Hardware Sets indicate standard weight.
   b. Interior Doors: Standard weight, steel, ball bearing or oil impregnated bearing hinges unless Hardware Sets indicate heavy weight.
5. Hinge Options: Comply with the following:
   a. Non-removable Pins: With the exceptions of electric through wire hinges, provide set screw in hinge barrel that, when tightened into a groove in hinge pin, prevents removal of pin while door is closed; for all out-swinging lockable doors.

2.3 CONTINUOUS HINGES

A. Continuous Geared Hinges: ANSI/BHMA A156.26 Grade 1 - 600 continuous geared hinge with minimum 0.120-inch thick extruded 6063-T6 aluminum alloy hinge leaves and a minimum overall width of 4 inches. Hinges are non-handed, reversible and fabricated to template screw locations. Factory trim hinges to suit door height and prepare for electrical cut-outs.

B. Manufacturers:
   1. Hagar Companies.
   2. Ives.
   3. Pemko.
   4. Substitutions: See Section 01 6000 - Product Requirements.

2.4 POWER TRANSFER DEVICES

A. Concealed Quick Connect Electric Power Transfers: Provide concealed wiring pathway housing mortised into the door and frame for low voltage electrified door hardware. Furnish with standardized plug connectors and sufficient number of concealed wires (up to 12) to accommodate the electrified functions specified in the Door Hardware Sets. Connectors plug directly to through-door wiring harness for connection to electric locking devices and power supplies. Wire nut connections are not acceptable.
   1. Manufacturers:
      a. Pemko; EL-CEPT Series.
      b. Securitron; EL-CEPT Series.
      c. Substitutions: See Section 01 6000 - Product Requirements.

B. Electric Door Wire Harness: Provide electric/data transfer wiring harnesses with standardized plug connectors to accommodate up to twelve (12) wires. Connectors plug directly to through-door wiring harnesses for connection to electric locking devices and power supplies. Provide sufficient number and type of concealed wires to accommodate electric function of specified hardware. Provide a connector for through-door electronic locking devices and from hinge to junction box above the opening. Wire nut connections are not acceptable. Determine the length required for each electrified hardware component for the door type, size and construction, minimum of two per electrified opening.
   1. Manufacturers:
      a. Hager Companies - Quick Connect.
      b. McKinney - QC-C Series.
      c. Substitutions: See Section 01 6000 - Product Requirements.

2.5 DOOR OPERATING TRIM

A. Flush Bolts: Comply with BHMA A156.16, Grade 1.
   1. Flush bolts to be furnished with top rod of sufficient length to allow bolt retraction device location approximately six feet from the floor.
   2. Furnish dust-proof strikes for bottom bolts.
   3. Surface bolts to be minimum 8" in length and UL listed for labeled fire doors and UL listed for windstorm components where applicable.
   4. Provide related accessories (mounting brackets, strikes, coordinators, etc.) as required for appropriate installation and operation.
   5. Manufacturers:
      a. Burns Manufacturing.
      b. Door Controls International.
      c. Rockwood.
      d. Substitutions: See Section 01 6000 - Product Requirements.

B. Coordinators: ANSI/BHMA A156.3 door coordinators consisting of active-leaf, hold-open lever and inactive-leaf release trigger. Mo
   1. Manufacturers:

a. Burns Manufacturing.
b. Door Controls International.
c. Rockwood.
d. Substitutions: See Section 01 6000 - Product Requirements.

C. Door Push Plates and Pulls: ANSI/BHMA A156.6 door pushes and pull units of type and design specified in the Hardware Sets. Coordinate and provide proper width and height as required where conflicting hardware dictates.
1. Push/Pull Plates: Minimum 0.050 inch thick, size as indicated in hardware sets, with beveled edges, secured with exposed screws unless otherwise indicated.
2. Door Pull and Push Bar Design: Size, shape, and material as indicated in the hardware sets. Minimum clearance of 2-1/2 inches from face of door unless otherwise indicated.
3. Offset Pull Design: Size, shape, and materials as indicated in the hardware sets. Minimum clearance of 2-1/2 inches from face of door and offset of 90 degrees unless otherwise indicated.
4. Pulls, where applicable, shall be provided with a 10" clearance from the finished floor on the push side to accommodate wheelchair accessibility.
5. Fasteners: Provide manufacturer's designated fastener type as indicated in Hardware Sets. When through-bolt fasteners are in the same location as a push plate, counter side the fasteners with the door face allowing the push plate to sit flat against the door.
6. Manufacturers:
a. Burns Manufacturing.
b. Rockwood.
c. Trimco.
d. Substitutions: See Section 01 6000 - Product Regulations.

2.6 EXIT DEVICES

A. General Requirements: All exit devices specified herein shall meet or exceed the following criteria:
1. Exit devices shall have a five-year warranty.
2. At doors not requiring a fire rating, provide devices complying with NFPA 101 and listed and labeled for 'Panic Hardware' according to UL305. Provide proper fasteners as required by manufacturer including sex nuts and bolts at openings specified in the Hardware Sets.
3. Where exit devices are required on fire rated doors, provide devices complying with NFPA 80 and with UL labeling indicating 'Fire Exit Hardware'. Provide devices with the proper fasteners for installation as tested and listed by UL. Consult manufacturer's catalog and template book for specific requirements.
4. Except on fire rated doors, provide exit devices with hex key dogging device to hold the pushbar and latch in a retracted position. Provide optional keyed cylinder dogging on devices where specified in Hardware Sets.
5. Devices must fit flat against the door face with no gap that permits unauthorized dogging of the push bar. The addition of filler strips is required in any case where the door light extends behind the device as in a full glass configuration.
6. Lever Operating Trim: Where exit devices require lever trim, furnish manufacturer's heavy duty escutcheon trim with threaded studs for thru-bolts.
a. Lock Trim Design: As indicated in Hardware Sets, provide finishes and designs to match that of the specified locksets.
b. Where function of exit device requires a cylinder, provide a cylinder (RIm or Mortise) as specified in the Hardware Sets.
7. Vertical Rod Exit Devices: where surface or concealed vertical rod exit devices are used at interior openings, provide as less bottom rod (LBR) unless otherwise indicated. Provide dust proof strikes where thermal pins are required to project into the floor.

8. Narrow Stile Applications: at doors constructed with narrow stiles, or as specified in Hardware Sets, provide devices designed for maximum 2" wide stiles.
9. Dummy Push Bar: Nonfunctioning push bar matching functional push bar.
10. Rail Sizing: Provide exit device rails factory sized for proper door width application.
11. Through Bolt Installation: For exit devices and trim as indicated in Door Hardware Sets.

B. Conventional Push Rail Exit Devices (Heavy Duty): ANSI/BHMA A156.3, Grade 1 Certified Products Directory (CPD) listed exit devices. Listed manufacturers shall meet all functions and features as specified herein.
1. Provide exit devices with function
   a. Where required by code, provide knurling or abrasive coating on all levers leading to hazardous areas.
   b. Meets UL and CUL Standard 10C Positive Pressure, Fire Test of Door Assemblies with levers that meet A117.1 Accessibility Code.
   c. No catch points: addition of applied deflectors or other added components are not allowed.
   d. No visible plastic.
   e. Heavy duty end caps with flush and overlapping options made of stainless steel, brass, or bronze with architectural finishes.
   f. Constructed of all stainless steel.
   g. Stainless steel pullman type latch with deadlock feature.
   h. Narrow or wide style exterior trim as specified in the hardware sets.
   i. Center case adjustability on concealed vertical rod exit devices; single operation with hex key individually adjusts top or bottom latches. No retainer screws or clips required to maintain adjustment.
   j. Ten-year limited warranty for mechanical features.
2. Electromechanical exit devices shall have the following functions and features:
   a. Universal Molex plug-in connectors that have standardized color-coded wiring and are field configurable in fail safe or fail secure and operate from 12vdc to 24vdc regulated.
   b. Wire routing for all non-access control electromechanical functions and EcoFlex trim to be contained within the carrier of the device eliminating the need for cavities in doors to be drilled. Include a protective film so that wires don't get damaged if the rail needs to be removed.
   c. EcoFlex or equivalent technology that reduces energy consumption up to 92% as certified by GreenCircle.
   d. Options to be available for request-to-exit or enter signaling, latchbolt and touchbar monitoring.
   e. Field configurable electrified trim to fail-safe or fail-secure that operates from 12-24vdc.
3. Manufacturers:
   a. Corbin Russwin Hardware - PED4000 / PED5000 Series.
   b. Sargent Manufacturing - PE80 Series.
   c. Substitutions: See Section 01 6000 - Product Requirements.

2.7 CYLINDERS AND KEYI

A. General: Cylinder manufacturer to have minimum (10) years experience designing secured master key systems and have on record a published security keying system

B. Cylinder Types: Original manufacturer cylinders a
1. Threaded mortise cylinders with rings and cams to suit hardware application.
2. Rim cylinders with back plate, flat-type vertical or horizontal tailpiece, and raised trim ring.
3. Bored or cylindrical lock cylinders with tailpieces as required to suit locks.
4. Tubular deadlocks and other auxiliary locks.

5. Mortise and rim cylinder collars to be solid and recessed to allow the cylinder face to be flush and be free spinning with matching finishes.
6. Keyway: Manufacturer's Standard.

C. Patented Cylinders: ANSI/BHMA A156.5, Grade 1 Certified Products Directory (CPD) listed cylinders employing a utility patented and restricted keyway requiring the use of a patented key. Cylinders are to be protected from unauthorized manufacture and distribution by manufacturer's United States patents. Cylinders are to be factory keyed with owner having the ability for onsite original key cutting.
1. Patented key systems shall not be established with products that have an expired patent. Expired systems shall only be specified and supplied to support existing systems.
2. Manufacturers:
a. Corbin Russwin - Access 3 AP.
b. Sargent - Degree DG1.
c. Substitutions: See Section 01 6000 - Product Requirements.

D. Keying System: Each type of lock and cylinders to be factory keyed.
1. Supplier shall conduct a "Keying Conference" to define and document keying system instructions and requirements.
2. Furnish factory cut, nickel-silver large bow permanently inscribed with a visual key control number as directed by Owner.
3. New System: Key locks to a new key system as directed by the Owner.

E. Key Quantity: Provide the following minimum number of keys:
1. Change Keys per Cylinder: Two (2).
2. Master Keys (per master Key Level/Group): Five (5).
3. Construction Keys (where required): Ten (10).

F. Construction Keying: Provide construction mast

G. Key Registration List (B
1. Provide keying transcript list to Owner's representative in the proper format for importing into key control s
2. Provide transcript list in writing or electronic file as directed by the Owner.

H. Key Control
1. A Key-Control Cabinet: Provide a key control system including envelopes, labels, and tags with self-locking key clips, receipt forms, 3-way visible card index, temporary markers, permanent markers, and standard metal cabinet. Key control cabinet shall have expansion capacity of 150% of the number of locks required for the project.
a. Manufacturers:
1) Lund Equipment.
2) MMF Industries.
3) Telkee.
4) Substitutions: See Section 01 6000 - Product Requirements.

2.8 CYLINDRICAL LOCKS

A. Cylindrical Locks (Bored): Comply with BHMA A156.2, Grade 1, 4000 Series, Operational Grade 1 Certified Products Directory (CPD) listed cylindrical locksets. Listed manufacturers shall meet all functions and features as specified herein.
1. Electromechanical locksets shall have the following functions and features:
a. Universal Molex plug-in connectors that have standardized color-coded wiring and are field configurable in fail safe or fail secure and operate from 12vdc to 24 vdc regulated.
b. EcoFlex or equivalent technology that reduces energy consumption up to 92% as certified by GreenCircle.
c. Options to be available for request-to-exit or enter signaling, latchbolt and deadbolt monitoring.

d. Two-year limited warranty on electrified functions.

2. Manufacturers:
   a. Corbin Russwin Hardware - CLX33
   b. Sargent Manufacturing - 10X Line.
   c. Substitutions: See Section 01 6000 - Product Requirements.

2.9 MORTISE LOCKS

A. Mortise Locks: Comply with BHMA A156.13, Grade 1, Heavy Duty, 1000 Series, Operational Grade 1 Certified Products Directory (CPD) listed mortise locksets. Listed manufacturers shall meet all functions and features specified herein.
   1. Manufacturers:
      a. Corbin Russwin Hardware - ML 2000 Series.
      b. Sargent Manufacturing - 8200 Series.
      c. Substitutions: See Section 01 6000 - Product Requirements.

2.10 LOCK AND LATCH STRIKES

A. Strikes: Provide manufacturer's standard strike with strike box for each latch or lock bolt, with curved lip extended to protect frame, finished to match door hardware set, unless otherwise indicated, and as follows:
   1. Flat-Lip Strikes: For locks with three-piece antifriction latchbolts, as recommended by manufacturer.
   2. Extra-Long-Lip Strikes: For locks used on frames with applied wood casing trim.
   3. Aluminum-Frame Strike Box: Provide manufacturer's special strike box fabricated for aluminum framing.
   4. Double-Lipped Strikes: For locks at double acting doors. Furnish with retractable stop for rescue hardware applications.

B. Standards: Comply with the following:
   1. Strikes for Mortise Locks and Latches: BHMA A156.13.
   2. Strikes for Bored Locks and Latches: BHMA A156.2.
   3. Strikes for Auxiliary Deadlocks: BHMA A156.36.
   4. Dustproof Strikes: BHMA A156.16.

2.11 CLOSERS

A. All door closers specified herein shall meet or exceed the following criteria:
   1. General: Door closers to be from one manufacturer, matching in design and style, with the same type door preparations and templates regardless of application or spring size. Closers to be non-handed with full sized covers.
   2. Size of Units: Comply with manufacturer's written recommendations for sizing of door closers depending on size of door, exposure to weather, and anticipated frequency of use. Where closers are indicated for doors required to be accessible to the Americans with Disabilities Act, provide units complying with ANSI ICC/A117.1.
   3. Closer Arms: Provide heavy duty, forged steel closer arms unless otherwise indicated in Hardware Sets.
   4. Closers shall not be installed on exterior or corridor side of doors; where all possible install closers on door for optimum aesthetics.
   5. Closer Accessories: Provide door closer accessories including custom templates, special mounting brackets, spacers and drop plates as required for proper installation. Provide through-bolt and security type fasteners as specified in the hardware sets.

B. Door Closers, Surface Mounted (Heavy Duty): ANSI/BHMA A156.4, Grade 1 Certified Products Directory (CPD) listed surface mounted, heavy duty door closers with complete spring power adjustments, sizes 1 through 6; and fully operational adjustable according to door size, frequency of use, and opening force.

Closers to be rack and pinion type, one piece cast iron or aluminum alloy body construction, with adjustable backcheck and separate non-critical valves for closing sweep and latch speed control. Provide non-handed units standard.

1. Heavy duty surface mounted door closers shall have a 30-year warranty.
2. Manufacturers:
   a. Corbin Russwin Hardware - DC6000 Series.
   b. Norton Rixson - 7500 Series.
   c. Sargent Manufacturing - 351 Series.
   d. Substitutions: See Section 01 6000 - Product Requirements.

2.12 ELECTROMECHANICAL DOOR OPERATORS

A. Electromechanical Door Operators (High Traffic): Provide ANSI/BHMA A156.19 Certified Products Deliver (CPD) listed low energy operators that are UL325/991 and UL10C certified and comply with requirements for the Americans with Disabilities Act (ADA). Operators shall accommodate openings up to 250 pounds and 48 inches wide.

1. Provide operators with the features as follows:
   a. Non-handed with push and pull side mounting.
   b. Activation by push button, hands-free or radio frequency devices.
   c. Adjustable opening force and closing power.
   d. Two-year limited warranty.
   e. Wi-Fi interface where the operator is a secure, password protected Wi-Fi hot spot with no connection to building's IT required.
      1) Simple setup with no app required.
      2) View status and make adjustments without removing the cover.
      3) Built-in logic to support single use restroom applications with no external relay boards, logic modules, position switches required.
   f. Mounting backplate to simplify and speed up installation.
   g. Integration with access control systems.
2. Operators shell have the following functionality:
   a. Adjustable Hold Open: Amount of time a door will stay in the full open position after an activation.
   b. Blow Open for Smoke Ventilation: Door opens when signal is received from alarm system allowing air or smoke to flow through opening. Door will stay open until signal from alarm system is stopped.
   c. Emergency Interface Relay: Door closes and ignores any activation input until signal is discontinued.
   d. Infinite Hold Open: Door will hold open at set position until power is turned off.
   e. Latch Assist: At closed position, after an activation, the door is pulled in. After the door has closed, the door is pulled in to assist with latch release/engagement.
   f. Obstruction Detection: Door closes if it hits an obstruction while opening; door will reverse to open position if it hits an obstruction while closing. Door will stop once it hits an obstruction and will rest against the obstruction until removed.
   g. Open Delay: Delays operator opening for locking hardware.
   h. Outside Wall Switch Disable: When contact is closed, outside wall switch is disabled.
   i. Power Assist: Senses the door is being opened manually and applies small amount of power to assist the user in opening the door with force less than 5 lbs. The door opens only as far as it is moved manually, then closes once released.
   j. Power Close: Additional force to assist door closing between 7° and 2°.
   k. Presence Detector Input: Input for external sensor to detect presence at door open or close position only.

l. Push & Go: As the door is manually opened, the operator "senses" movement and opens door to the full-open position.
m. Selector Mode Switch: Off disables the signal inputs unless Blow Open is activated, on activates the signal inputs, hold open activates the unit (unless Blow Closed is activated) to the hold open position.
n. Vestibule Delay: When the wall switch is pressed, first door in vestibule will open. Second door will open once vestibule door delay has expired. Delay is adjustable.
o. Executive Mode Feature: When the door receives an activation signal it opens and remains open until either a second signal is received, or the door is manually moved in closing direction.

3. Manufacturers:
   a. Assa Abloy Entrance Systems - SW200 Series.
   b. Norton Rixson - 6300 Series.
   c. Substitutions: See Section 01 6000 - Product Requirements.

2.13 KICK PLATES

A. General: Door protective trim units to be of type and design as specified below or in the Hardware Sets.
B. Size: Fabricate protection plates (kick, armor, or mop) not more than 2" less than door width (LDW) on stop side of single doors and 1” LDW on stop side of pairs of doors, and not more than 1" less than door width on pull side. Coordinate and provide proper width and height as required where conflicting hardware dictates. Height to be as specified in the Hardware Sets.
C. Where plates are applied to fire rated doors with the top of the plate more than 16” above the bottom of the door, provide plates complying with NFPA 80. Consult manufacturer’s catalog and template book for specific requirements for size and applications.
D. Protection Plates: ANSI/BHMA A156.6 protection plates (kick, armor, or mop), fabricated from the following:
   1. Stainless Steel: 300 grade, 050-inch thick.
E. Options and fasteners: Provide manufacturer's designated fastener type as specified in the Hardware Sets. Provide countersunk screw holes.
F. Manufacturers:
   1. Burns Manufacturing.
   2. Hager Companies.
   3. Rockwood.

2.14 DOOR STOPS AND HOLDERS

A. General: Door stops and holders to be of type and design as specified below or in the Hardware Sets.
B. McKinney or Rockwood; an Assa Abloy Group company; www.assaabloydss.com/#sle.
   1. Manufacturers:
      a. Burns Manufacturing.
      b. Hager Companies.
      c. Rockwood.
      d. Substitutions: See Section 01 6000 - Product Requirements.
C. Overhead Door Stops and Holders: ANSI/BHMA A156.8, Grade 1 Certified Products Directory (CPD) listed overhead stops and holders to be surface or concealed types as indicated in Hardware Sets. Track, slide, arm and jamb bracket to be constructed of extruded bronze and shock absorber spring of heavy tempered steel. Provide non-handed design with mounting brackets as required for proper operation and function.
   1. Manufacturers:
   2. Norton Rixso
      a. Rockwood.
      b. Sargent Manufacturing.

c. Substitutions: See Section 01 6000 - Product Requirements.

2.15 ELECTRONIC ACCESSORIES

A. Push-Button Switches: Industrial grade momentary or alternate contact, back-lighted push buttons with stainless steel switch enclosures. 12/24 VDC bi-color illumination suitable for either flush or surface mounting
   1. Manufacturer
      a. Alarm Controls - TS Series.
      b. Securitron - PB Series.
      c. Substitutions: See Section 01 6000 - Product Requirements.

B. Door Position Switches: Door position magnetic reed contact switches specifically designed for use in commercial door applications. On recessed models the contact and magnetic housing snap-lock into a 1" diameter hole. Surface mounted models include wide gap distance design complete with armored flex cabling. Provide SPDT, N/O switches with optional Rare Earth Magnet installation on steel doors with flush top channels.
   1. Manufacturers:
      a. Security Door Controls - DPS Series.
      b. Securitron - DPS Series.
      c. Substitutions: See Section01 6000-Product Requirements.

C. Switching Power Supplies: Provide the least number of power supplies at the appropriate amperage level sufficient to exceed the required total draw for the specified electrified hardware and access control equipment.
   1. Power supplies shall meet all functions and features as specified herein.
      a. UL listed dual voltage 12 or 24 VDC field selectable continuous output.
      b. Tolerates brownout or overvoltage input ± 15% of nominal voltage.
      c. Thermal shutdown protection with auto restart.
      d. Circuit breaker protection against overcurrent and reverse battery faults.
      e. Integrated battery charging circuit to prevent overvoltage on locking devices.
      f. Available with a single relay fire trigger or individually triggered relayed outputs.
      g. Monitoring options as specified.

2.16 ARCHITECTURAL SEALS

A. General: Thresholds, weatherstripping, and gasket seals to be of type and design as specified below or in the Hardware Sets. Provide continuous weatherstrip gasketing on exterior doors and provide smoke, light, or sound gasketing on interior doors where indicated. At exterior applications provide non-corrosive fasteners and elsewhere where indicated.

B. Smoke Labeled Gasketing: Assemblies complying with NFPA 105 that are listed and labeled by a testing and inspecting agency acceptable to authorities having jurisdiction, for smoke control ratings indicated, based on testing according to UL 1784.
   1. Pemko; an Assa Abloy Group company; www.assaabloydss.com/#sle.
   2. Hager Companies; www.hagerco.com/#sle.
   3. National Guard Products, Inc; www.ngpinc.com/#sle.
   4. Reese Enterprises, Inc; www.reeseusa.com/#sle.
   5. Zero International, Inc; www.zerointernational.com/#sle.

C. Manufacturers:
   1. National Guard Products.
   2. Pemko.
   3. Substitutions: See Section 01 6000 - Product Requirements.

2.17 FABRICATION

A. Fasteners: Provide door hardware manufactured to comply with published templates generally prepared for machine, wood, and sheet metal screws. Provide screws according to manufacturers recognized installation standards for application intended.

2.18 FINISHES

A. Finishes: Identified in Section 08 0671 - Door Hardware Schedule.
B. Standard: Designations used in the Hardware Sets and elsewhere indicate hardware finishes complying with ANSI/BHMA A156.18, including coordination with traditional U.S. finishes indicated by certain manufacturers for their products.
C. Provide quality of finish, including thickness of plating or coating (if any), composition, hardness, and other qualities complying with manufacturer's standards, but in no case less than specified by referenced standards for the applicable units of hardware
D. Protect mechanical finishes on exposed surfaces from damage by applying a strippable, temporary protective covering before shipping.

PART 3 EXECUTION

3.1 EXAMINATION

A. Verify that doors and frames are ready to receive this work; labeled, fire-rated doors and frames are properly installed, and dimensions are as indicated on shop drawings.
B. Verify that electric power is available to power operated devices and of correct characteristics.
C. Notify architect of any discrepancies or conflicts between the door schedule, door types, drawings and scheduled hardware. Proceed only after such discrepancies or conflicts have been resolved in writing.

3.2 PREPARATION

A. Hollow Metal Doors and Frames: Comply with ANSI/DHI A115 series.
B. Wood Doors: Comply with ANSI/DHI A115-W series.

3.3 INSTALLATION

A. Install hardware in accordance with manufacturer's instructions and applicable codes.
B. Install hardware on fire-rated doors and frames in accordance with applicable codes and NFPA 80.
C. Use templates provided by hardware item manufacturer.
D. Mounting Heights: Mount door hardware units at heights indicated in following applicable publications, unless specifically indicated or required to comply with governing regulations:
    1. Standard Steel Doors and Frames: DHI's "Recommended Locations for Architectural Hardware for Standard Steel Doors and Frames."
    2. DHI TDH-007-20: Installation Guide for Doors and Hardware.
    3. Where indicated to comply with accessibility requirements, comply with ANSI A117.1 "Accessibility Guidelines for Buildings and Facilities."
E. Set exterior door thresholds with full-width bead of elastomeric sealant at each point of contact with floor providing a continuous weather seal; anchor thresholds with stainless steel countersunk screws.
F. Retrofitting: Install door hardware to comply with manufacturer's published templates and written instructions. Where cutting and fitting are required to install door hardware onto or into surfaces that are later to be painted or finished in another way, coordinate removal, storage, and reinstallation of surface protective trim units with finishing work specified in Division 9 Sections. Do not install surface-mounted items until finishes have been completed on substrates involved.
G. Push Plates and Door Pulls: When through-bolt fasteners are in the same location as a push plate, countersink the fasteners flush with the door face allowing the push plate to sit flat against the door.
H. Storage: Provide a secure lock up for hardware delivered to the project but not yet installed. Control the handling and installation of hardware items so that the completion of the work will not be delayed by hardware losses before and after installation.

3.4 FIELD QUALITY CONTROL

A. Perform field inspection and testing under provisions of Section 01 4000 - Quality Requirements.
B. Provide an Architectural Hardware Consultant (AHC) to inspect installation and certify that hardware and installation has been furnished and installed in accordance with manufacturer's instructions and as specified.

3.5 ADJUSTING

A. Adjust work under provisions of Section 01 7000 - Execution and Closeout Requirements.
B. Adjust hardware for smooth operation.
C. Adjust gasketing for complete, continuous seal; replace if unable to make complete seal.

3.6 CLEANING

A. Clean finished hardware in accordance with manufacturer's written instructions after final adjustments have been made.
B. Clean adjacent surfaces soiled by hardware installation.
C. Replace items that cannot be cleaned to manufacturer's level of finish quality at no additional cost.

END OF SECTION

SECTION 08 8000 - GLAZING

PART 1 GENERAL

1.1 SECTION INCLUDES

A. Insulating glass units.
B. Glazing units.
C. Plastic films.

1.2 RELATED REQUIREMENTS

A. Section 07 2500 - Weather Barriers.
B. Section 08 1113 - Hollow Metal Doors and Frames: Glazed lites in doors and borrowed lites.
C. Section 08 1416 - Flush Wood Doors: Glazed lites in doors.
D. Section 08 4313 - Aluminum-Framed Storefronts: Glazing provided as part of storefront assembly.
E. Section 08 8300 - Mirrors.

1.3 REFERENCE STANDARDS

A. 16 CFR 1201 - Safety Standard for Architectural Glazing Materials.
B. ANSI Z97.1 - American National Standard for Safety Glazing Materials Used in Buildings - Safety Performance Specifications and Methods of Test.
C. ASCE 7 - Minimum Design Loads and Associated Criteria for Buildings and Other Structures.
D. ASTM C1036 - Standard Specification for Flat Glass.
E. ASTM C1048 - Standard Specification for Heat-Strengthened and Fully Tempered Flat Glass.
F. ASTM C1193 - Standard Guide for Use of Joint Sealants.
G. ASTM C1376 - Standard Specification for Pyrolytic and Vacuum Deposition Coatings on Flat Glass.
H. ASTM D882 - Standard Test Method for Tensile Properties of Thin Plastic Sheeting.
I. ASTM E84 - Standard Test Method for Surface Burning Characteristics of Building Materials.
J. ASTM E1300 - Standard Practice for Determining Load Resistance of Glass in Buildings.
K. ASTM E2190 - Standard Specification for Insulating Glass Unit Performance and Evaluation.
L. BS EN 14179-1 - Glass in Building - Heat Soaked Thermally Toughened Soda Lime Silicate Safety Glass - Part 1: Definition and Description.
M. GANA (SM) - GANA Sealant Manual.
N. NFRC 100 - Procedure for Determining Fenestration Product U-factors.
O. NFRC 200 - Procedure for Determining Fenestration Product Solar Heat Gain Coefficient and Visible Transmittance at Normal Incidence.
P. NFRC 300 - Test Method for Determining the Solar Optical Properties of Glazing Materials and Systems.

1.4 SUBMITTALS

A. See Section 01 3000 - Administrative Requirements for submittal procedures.
B. Product Data on Insulating Glass Unit Glazing Types: Provide structural, physical and environmental characteristics, size limitations, special handling and installation requirements.
C. Product Data on Glazing Compounds and Accessories: Provide chemical, functional, and environmental characteristics, limitations, special application requirements, and identify available colors.
D. Samples: Submit two samples 4 by 4 inch in size for exterior insulated glazing units.
E. Warranty Documentation: Submit manufacturer warranty and ensure that forms have been completed in Owner's name and registered with manufacturer.

1.5 QUALITY ASSURANCE

A. Manufacturer Qualifications: Company specializing in manufacturing the products specified in this section with minimum three years of documented experience.
    1. Provide certified glass products through ANSI accredited certifications that include plant audits and independent laboratory performance testing.

B. Installer Qualifications: Company specializing in performing work of the type specified and with at least three years documented experience.
   1. Provide company, field supervisors, and installers that hold active ANSI accredited certifications in appropriate categories for work specified.

1.6 MOCK-UPS

A. See Section 01 4000 - Quality Requirements for additional requirements.
B. Provide mock-up of exterior insulated glazing unit(s) including GL-1 and GL-2 including glass and air barrier and vapor retarder seal.
C. Provide on-site glazing mock-up with the specified glazing components.
D. Locate at the southwest side of the building at the full-height storefront windows with GL-1 and GL-2.
E. Mock-ups may remain as part of the Work.

1.7 FIELD CONDITIONS

A. Do not install glazing when ambient temperature is less than 40 degrees F.
B. Maintain minimum ambient temperature before, during and 24 hours after installation of glazing compounds.

1.8 WARRANTY

A. See Section 01 7800 - Closeout Submittals for additional warranty requirements.
B. Insulating Glass Units: Provide a five (5) year manufacturer warranty to include coverage for seal failure, interpane dusting or misting, including providing products to replace failed units.
C. Laminated Glass: Provide a five (5) year manufacturer warranty to include coverage for delamination, including providing products to replace failed units.

PART 2 PRODUCTS

2.1 MANUFACTURERS

A. Float Glass Manufacturers:
   1. Vitro Architectural Glass (formerly PPG Glass); Solarban 70 (2) Optigray
      : www.vitroglazings.com/#sle.

2.2 PERFORMANCE REQUIREMENTS - EXTERIOR GLAZING ASSEMBLIES

A. Provide type and thickness of exterior glazing assemblies to support assembly dead loads, and to withstand live loads caused by positive and negative wind pressure acting normal to plane of glass.
   1. Design Pressure: Calculated in accordance with ASCE 7.
   2. Comply with ASTM E1300 for design load resistance of glass type, thickness, dimensions, and maximum lateral deflection of supported glass.
   3. Seismic Loads: Design and size glazing components to withstand seismic loads and sway displacement in accordance with the requirements of ASCE 7
   4. Provide glass edge support system sufficiently stiff to limit the lateral deflection of supported glass edges to less than 1/175 of their lengths under specified design load.
   5. Glass thicknesses listed are minimum.
B. Weather-Resistive Barrier Seals: Provide completed assemblies that maintain continuity of building enclosure water-resistive barrier, vapor retarder, and/or air barrier.
   1. In conjunction with weather barrier related materials described in other sections, as follows:
      a. Water-Resistive Barriers: See Section 07 2500.
   2. To utilize inner pane of multiple pane insulating glass units for continuity of vapor retarder and/or air barrier seal.
C. Thermal and Optical Performance: Provide exterior glazing products with performance properties as indicated. Performance properties are in accordance with manufacturer's published data as determined with the following procedures and/or test methods:

1. Center of Glass U-Value: Comply with NFRC 100 using Lawrence Berkeley National Laboratory (LBNL) WINDOW 7 computer program.
2. Center of Glass Solar Heat Gain Coefficient (SHGC): Comply with NFRC 200 using Lawrence Berkeley National Laboratory (LBNL) WINDOW 7 computer program.
3. Solar Optical Properties: Comply with NFRC 300 test method.

2.3 GLASS MATERIALS

A. Float Glass: Provide float glass based glazing unless otherwise indicated.
   1. Annealed Type: ASTM C1036, Type I - Transparent Flat, Class 1 - Clear, Quality - Q3.
   2. Kind HS - Heat-Strengthened Type: Complies with ASTM C1048.
   3. Kind FT - Fully Tempered Type: Complies with ASTM C1048.
   4. Fully Tempered Safety Glass: Complies with ANSI Z97.1 or 16 CFR 1201 criteria for safety glazing used in hazardous locations.
   5. Heat-Soak Testing (HST): Provide HST of fully tempered glass used on canopy, point-supported, spider wall, high-risk, sloping overhead, horizontal overhead, free-standing glass protective barrier, or other demanding applications of project, to reduce risks of spontaneous breakage due to nickel sulfide (NiS) induced fractures in accordance with BS EN 14179-1.
   6. Thicknesses: As indicated; provide greater thickness as required for exterior glazing wind load design.

2.4 INSULATING GLASS UNITS

A. Manufacturers:
   1. Glass: Any of the manufacturers specified for float glass.
   2. Vitro Architectural Glass (formerly PPG Glass); Solarban 70 (2) Optigray + Clear : www.vitroglazings.com/#sle.
   3. Substitutions: See Section 01 6000 - Product Requirements.
B. Insulating Glass Units: Types as indicated.
   1. Durability: Certified by an independent testing agency to comply with ASTM E2190.
   2. Coated Glass: Comply with requirements of ASTM C1376 for pyrolytic (hard-coat) or magnetic sputter vapor deposition (soft-coat) type coatings on flat glass; coated vision glass, Kind CV; coated overhead glass, Kind CO; or coated spandrel glass, Kind CS.
   3. Warm-Edge Spacers: Low-conductivity thermoplastic with desiccant warm-edge technology design.
      a. Spacer Width: As required for specified insulating glass unit.
      b. Spacer Height: Manufacturer's standard.
   4. Spacer Color: Black.
   5. Edge Seal:
      a. Dual-Sealed System: Provide polyisobutylene sealant as primary seal applied between spacer and glass panes, and silicone, polysulfide, or polyurethane sealant as secondary seal applied around perimeter.
      b. Color: Black.
   6. Purge interpane space with dry air, hermetically sealed.
C. Type GL-1 - Insulating Glass Units: Vision glass, double glazed.
   1. Applications: Exterior glazing unless otherwise indicated.
   2. Space between lites filled with air.
   3. Outboard Lite: Annealed and Fully tempered float glass, 1/4 inch thick, minimum. See Drawings for Tempered locations.
      a. Tint: Gray.
      b. Coating: Low-E (passive type), on #2 surface.
   4. Inboard Lite: Annealed and Fully tempered float glass, 1/4 inch thick, minimum. See Drawings for Tempered locations

a. Tint: Clear.
5. Total Thickness: 1 inch.
6. Thermal Transmittance (U-Value), Summer - Center of Glass: 0.26, nominal.
7. Visible Light Transmittance (VLT): 46 percent, nominal.
8. Solar Heat Gain Coefficient (SHGC): 0.28, nominal.

D. Type GL-2 - Insulating Glass Units: Spandrel glazing.
1. Applications: Exterior spandrel glazing unless otherwise indicated.
2. Space between lites filled with air.
3. Outboard Lite: Fully tempered float glass, 1/4 inch thick, minimum.
a. Tint: Gray.
b. Coating: Same as on vision units, on #2 surface.
c. Vitro Architectural Glass (formerly PPG); Solarban 70 on Solargray 6mm.
4. Inboard Lite: Heat-strengthened float glass, 1/4 inch thick.
a. Tint: Gray.
b. Opacifier: Ceramic frit, on #4 surface.
c. Vitro Architectural Glass (formerly PPG); 100% Gray frit (4) on 6mm Optigray.
5. Total Thickness: 1 inch.
6. Thermal Transmittance (U-Value), Summer - Center of Glass: Same as GL-1.

2.5 GLAZING UNITS

A. Type GL-3 - Monolithic Interior Vision Glazing:
1. Applications: Interior glazing unless otherwise indicated.
2. Glass Type: Annealed and Fully tempered float glass. See drawings for tempered glass locati
3. Tint: Clear.
4. Thickness: 1/4 inch, nominal.

B. Glass Shelves:
1. Applications: Locations as indicated on drawings.
2. Tint: Clear.
3. Glass Type: Fully tempered float glass with ground edges and corners; ASTM C1048.
4. Thickness: As noted on Drawing

2.6 PLASTIC FILMS

A. Safety and Security Plastic Film.
1. Application: Locations as indicated on drawings.
2. Surface Burning Characteristics: Flame Spread Index (FSI)/Smoke Developed Index (SDI) of Class A, 25/450, maximum, when tested in accordance with ASTM E84.
3. Tensile Strength: Minimum of 31,500 psi when measured in accordance with ASTM D882.
4. Impact Resistance: Comply with ANSI Z97.1 and 16 CFR 1201 impact test requirements when applied to 1/8 inch thick annealed glass.
5. Color: Frost.
6. Style: Solyx Feather Gradient SXJ-0547
7. Thickness Without Liner: 0.004 inch.
8. Visible Light Transmittance (VLT): 15 percent, nominal.
9. Shading Coefficient: 55, nominal.
10. Manufacturers:
a. Decorative Films, : www.decorativefilms.com/#sle.
b. 3M; Scotchshield Safety & Security Window Film Ultra Series.
c. Substitutions: See Section 01 6000 - Product Requirements.

B. Type WF-1 - Decorative Plastic Film.
1. Application: Locations as indicated on drawings.
2. Series Type: Frost.

3. Color: Feather Gradient - SXJ-0547. See Finish Schedule.
4. Width: 71 inch.

PART 3 EXECUTION

3.1 VERIFICATION OF CONDITIONS

A. Verify that openings for glazing are correctly sized and within tolerances, including those for size, squareness, and offsets at corners.
B. Verify that the minimum required face and edge clearances are being provided.
C. Verify that surfaces of glazing channels or recesses are clean, free of obstructions that may impede moisture movement, weeps are clear, and support framing is ready to receive glazing system.
D. Verify that sealing between joints of glass framing members has been completed effectively.

3.2 PREPARATION

A. Clean contact surfaces with appropriate solvent and wipe dry within maximum of 24 hours before glazing. Remove coatings that are not tightly bonded to substrates.
B. Seal porous glazing channels or recesses with substrate compatible primer or sealer.
C. Prime surfaces scheduled to receive sealant where required for proper sealant adhesion.

3.3 INSTALLATION, GENERAL

A. Install glazing in compliance with written instructions of glass, gaskets, and other glazing material manufacturers, unless more stringent requirements are indicated, including those in glazing referenced standards.
B. Install glazing sealants in accordance with ASTM C1193, GANA (SM), and manufacturer's instructions.
C. Do not exceed edge pressures around perimeter of glass lites as stipulated by glass manufacturer.
D. Set glass lites in proper orientation so that coatings face exterior or interior as indicated.
E. Prevent glass from contact with any contaminating substances that may be the result of construction operations such as, and not limited to the following; weld splatter, fire-safing, plastering, mortar droppings, and paint.

3.4 CLEANING

A. Remove excess glazing materials from finish surfaces immediately after application using solvents or cleaners recommended by manufacturers.
B. Remove nonpermanent labels immediately after glazing installation is complete.
C. Clean glass and adjacent surfaces after sealants are fully cured.
D. Clean glass on both exposed surfaces not more than 4 days prior to Date of Substantial Completion in accordance with glass manufacturer's written recommendations.

3.5 PROTECTION

A. After installation, mark pane with an 'X' by using removable plastic tape or paste; do not mark heat absorbing or reflective glass units.
B. Remove and replace glass that is damaged during construction period prior to Date of Substantial Completion.

END OF SECTION

SECTION 08 8300 - MIRRORS

PART 1 GENERAL

1.1 SECTION INCLUDES

A. Glass mirrors.
   1. Tempered safety glass.
B. Decorative mirrors.

1.2 RELATED REQUIREMENTS

A. Section 10 2800 - Toilet, Bath, and Laundry Accessories: Metal mirror frames.

1.3 REFERENCE STANDARDS

A. ASTM C1048 - Standard Specification for Heat-Strengthened and Fully Tempered Flat Glass.
B. ASTM C1193 - Standard Guide for Use of Joint Sealants.
C. GANA (GM) - GANA Glazing Manual.
D. GANA (SM) - GANA Sealant Manual.

1.4 SUBMITTALS

A. See Section 01 3000 - Administrative Requirements, for submittal procedures.
B. Product Data on Mirror Types: Submit structural, physical and environmental characteristics, size limitations, special handling and installation requirements.
C. Product Data on Glazing Compounds: Submit chemical, functional, and environmental characteristics, limitations, special application requirements, and identify available colors.
D. Warranty: Submit manufacturer warranty and ensure that forms have been completed in Owner's name and registered with manufacturer.

1.5 WARRANTY

A. See Section 01 7800 - Closeout Submittals, for additional warranty requirements.

PART 2 PRODUCTS

2.1 MANUFACTURERS

A. BackLit Mirrors: AL6061 frame, Integral cULus recognized power supply; Extruded back aluminum mounting panel with top and bottom key hole slots.
   1. Bobrick Accessories Inc (24'' x 36'' LED backlit Mirror); LED Backlit Mirror; B-164: www.bobrick.com
   2. Substitutions: See Section 01 6000 - Product Requirements.

2.2 MATERIALS

A. Mirror Design Criteria: Select materials and/or provide supports as required to limit mirror material deflection to 1/200, or to the flexure limit of glass, with full recovery of glazing materials, whichever is less.
B. Mirror Glass: Clear, tempered safety glass; ASTM C1048, with copper and silver coatings, and protective overcoating.
   1. Thickness: 1/4 inch.
   2. Edges: Arrised.
   3. Size: As indicated on drawings.

2.3 ACCESSORIES

A. Setting Blocks: Neoprene, 80 to 90 Shore A durometer hardness.
B. Glazing Clips: Manufacturer's standard type.
C. Mirror Attachment Accessories: Stainless steel clips.

PART 3 EXECUTION

3.1 EXAMINATION

A. Verify that openings for mirrored glazing are correctly sized and within tolerance.
B. Verify that surfaces of mirror frames or recesses are clean, free of obstructions, and ready for installation of mirrors.

3.2 PREPARATION

A. Clean contact surfaces with solvent and wipe dry.
B. At lavatory Lit mirrors verify electric outlet is installed and connected to power source.
C. Prepare installation in accordance with ASTM C1193 for solvent release sealants, and install sealant in accordance with manufacturer's instructions.

3.3 INSTALLATION

A. Install mirrors in accordance with manufacturer's recommendations.
B. Set mirrors plumb and level, and free of optical distortion.
C. Set mirrors with edge clearance free of surrounding construction including countertops or backsplashes.
D. Installation in Frames:
    1. Cut glazing tape to length and set against permanent stops, projecting 1/16 inch above sight line.
    2. Place setting blocks at one-quarter points with edge block no more than 6 inches from corners.
    3. Rest mirrors on setting blocks and push against tape to ensure full contact at perimeter of pane or unit.
    4. Place glazing tape on free perimeter of mirrors in same manner described above.
    5. Trim protruding tape edge.
E. Frameless Mirrors: Set mirrors with clips, and anchor rigidly to wall construction.

3.4 CLEANING

A. Remove wet glazing materials from finish surfaces.
B. Remove labels after work is complete.
C. Clean mirrors and adjacent surfaces.

END OF SECTION

SECTION 09 0561 - COMMON WORK RESULTS FOR FLOORING PREPARATION

PART 1 GENERAL

1.1 SECTION INCLUDES

A. This section applies to floors identified in Contract Documents that are receiving the following types of floor coverings:
   1. Resilient tile.
   2. Carpet tile.
   3. Porcelain tile .
   4. Epoxy Floor.

B. Preparation of new concrete floor slabs for installation of floor coverings.

C. Testing of concrete floor slabs for moisture and alkalinity (pH).

D. Remediation of concrete floor slabs due to unsatisfactory moisture or alkalinity (pH) conditions.
   1. Contractor shall perform all specified remediation of concrete floor slabs. If such remediation is indicated by testing agency's report and is due to a condition not under Contractor's control or could not have been predicted by examination prior to entering into the contract, a contract modification will be issued.

E. Remedial floor coatings.

F. Remedial floor treatment.

1.2 RELATED REQUIREMENTS

A. Section 01 2300 - Alternates: Bid pricing for remediation treatments if required.

B. Section 01 4000 - Quality Requirements: Additional requirements relating to testing agencies and testing.

C. Section 03 3000 - Cast-in-Place Concrete: Moisture emission reducing curing and sealing compound for slabs to receive adhered flooring, to prevent moisture content-related flooring failures; to remain in place, not to be removed.

1.3 REFERENCE STANDARDS

A. ASTM F710 - Standard Practice for Preparing Concrete Floors to Receive Resilient Flooring.

B. ASTM F1869 - Standard Test Method for Measuring Moisture Vapor Emission Rate of Concrete Subfloor Using Anhydrous Calcium Chloride.

C. ASTM F2170 - Standard Test Method for Determining Relative Humidity in Concrete Floor Slabs Using in situ Probes.

D. ASTM F3010 - Standard Practice for Two-Component Resin Based Membrane-Forming Moisture Mitigation Systems for Use Under Resilient Floor Coverings;2018.

E. ASTM F3513 - Standard Practice for Single Component, Fluid-Applied Membrane-Forming Moisture Mitigation Systems for Use Under Resilient Floor Coverings.

1.4 ADMINISTRATIVE REQUIREMENTS

A. Coordinate scheduling of cleaning and testing, so that preliminary cleaning has been completed for at least 24 hours prior to testing.

1.5 SUBMITTALS

A. See Section 01 3000 - Administrative Requirements for submittal procedures.

B. Floor Covering and Adhesive Manufacturers' Product Literature: For each specific combination of substrate, floor covering, and adhesive to be used; showing:
   1. Moisture and alkalinity (pH) limits and test methods.
   2. Manufacturer's required bond/compatibility test procedure.

C. Remedial Materials Product Data: Manufacturer's published data on each product to be used for remediation.
D. Testing Agency's Report:
   1. Description of areas tested; include floor plans and photographs if helpful.
   2. Summary of conditions encountered.
   3. Moisture and alkalinity (pH) test reports.
   4. Copies of specified test methods.
   5. Recommendations for remediation of unsatisfactory surfaces.
   6. Submit report to Architect.
   7. Submit report not more than two business days after conclusion of testing.
E. Adhesive Bond and Compatibility Test Report.

1.6 QUALITY ASSURANCE

A. Moisture and alkalinity (pH) testing shall be performed by an independent testing agency employed and paid by Contractor.
B. Testing Agency Qualifications: Independent testing agency experienced in the types of testing specified.
   1. Submit evidence of experience consisting of at least 3 test reports of the type required, with project Owner's project contact information.
C. Contractor's Responsibility Relating to Independent Agency Testing:
   1. Provide access for and cooperate with testing agency.
   2. Confirm date of start of testing at least 10 days prior to actual start.
   3. Allow at least 4 business days on site for testing agency activities.
   4. Achieve and maintain specified ambient conditions.
   5. Notify Architect when specified ambient conditions have been achieved and when testing will start.

1.7 FIELD CONDITIONS

A. Maintain ambient temperature in spaces where concrete testing is being performed, and for at least 48 hours prior to testing, at not less than 65 degrees F or more than 85 degrees F.
B. Maintain relative humidity in spaces where concrete testing is being performed, and for at least 48 hours prior to testing, at not less than 40 percent and not more than 60 percent.

PART 2 PRODUCTS

2.1 MATERIALS

A. Remedial Floor Coating, Two-Component: Single-layer coating resistant to water vapor transmission meeting flooring manufacturer's emission limits, resistant to alkalinity (pH) level found, and suitable for flooring adhesion without further treatment.
   1. Material: Comply with ASTM F3010.
   2. Thickness: As required for application and in accordance with manufacturer's installation instructions.
   3. Products:
      a. ARDEX Engineered Cements; ARDEX MC RAPID: www.ardexamericas.com/#sle.
      b. H.B. Fuller Construction Products, Inc; TEC LiquiDam: www.tecspecialty.com/#sle.
      c. Maxxon Corporation; Maxxon MVP Two-Part Epoxy: www.maxxon.com/#sle.
      d. Substitutions: See Section 01 6000 - Product Requirements.
B. Remedial Floor Coating, Single Component: Single-layer coating resistant to water vapor transmission meeting flooring manufacturer's emission limits, resistant to alkalinity (pH) level found, and suitable for flooring adhesion without further treatment.

1. Material: Comply with ASTM F3513.
2. Thickness: As required for application and in accordance with manufacturer's installation instructions.
3. Products:
   a. ARDEX Engineered Cements; ARDEX VB 100: www.ardexamericas.com/#sle.
   b. H.B. Fuller Construction Products, Inc; TEC LiquiDam EZ: www.tecspecialty.com/#sle.
   c. Maxxon Corporation; Maxxon MVP One Primer: www.maxxon.com/#sle.
   d. Substitutions: See Section 01 6000 - Product Requirements.

PART 3 EXECUTION

3.1 CONCRETE SLAB PREPARATION

A. Follow recommendations of testing agency.
B. Perform following operations in the order indicated:
   1. Preliminary cleaning.
   2. Moisture vapor emission tests; 3 tests in the first 1000 square feet and one test in each additional 1000 square feet, unless otherwise indicated or required by flooring manufacturer.
   3. Internal relative humidity tests; in same locations as moisture vapor emission tests, unless otherwise indicated.
   4. Alkalinity (pH) tests; in same locations as moisture vapor emission tests, unless otherwise indicated.
   5. Specified remediation, if required.
   6. Patching, smoothing, and leveling, as required.
   7. Other preparation specified.
   8. Adhesive bond and compatibility test.
   9. Protection.
C. Remediations:
   1. Active Water Leaks or Continuing Moisture Migration to Surface of Slab: Correct this condition before doing any other remediation; re-test after correction.
   2. Excessive Moisture Emission or Relative Humidity: If an adhesive that is resistant to the level of moisture present is available and acceptable to flooring manufacturer, use that adhesive for installation of the flooring; if not, apply remedial floor coating or remedial sheet membrane over entire suspect floor area.
   3. Excessive Alkalinity (pH): If remedial floor coating is necessary to address excessive moisture, no additional remediation is required; if not, if an adhesive that is resistant to the level present is available and acceptable to the flooring manufacturer, use that adhesive for installation of the flooring; otherwise, apply a skim coat of specified patching compound over entire suspect floor area.

3.2 MOISTURE VAPOR EMISSION TESTING

A. Where the floor covering manufacturer's requirements conflict with either the referenced test method or this specification, comply with the manufacturer's requirements.
B. Where this specification conflicts with the referenced test method, comply with the requirements of this section.
C. Test in accordance with ASTM F1869 and as follows.
D. Plastic sheet test and mat bond test may not be substituted for the specified ASTM test method, as those methods do not quantify the moisture content sufficiently.

E. In the event that test values exceed floor covering manufacturer's limits, perform remediation as indicated. In the absence of manufacturer limits, perform remediation if test values exceed 3 pounds per 1000 square feet per 24 hours.
F. Report: Report the information required by the test method.

3.3 INTERNAL RELATIVE HUMIDITY TESTING

A. Where the floor covering manufacturer's requirements conflict with either the referenced test method or this specification, comply with the manufacturer's requirements.
B. Where this specification conflicts with the referenced test method, comply with the requirements of this section.
C. Test in accordance with ASTM F2170 Procedure A and as follows.
D. Testing with electrical impedance or resistance apparatus may not be substituted for the specified ASTM test method, as the values determined are not comparable to the ASTM test values and do not quantify the moisture content sufficiently.
E. In the event that test values exceed floor covering manufacturer's limits, perform remediation as indicated. In the absence of manufacturer limits, perform remediation if any test value exceeds 75 percent relative humidity.
F. Report: Report the information required by the test method.

3.4 ALKALINITY TESTING

A. Where the floor covering manufacturer's requirements conflict with either the referenced test method or this specification, comply with the manufacturer's requirements.
B. In the event that test values exceed floor covering manufacturer's limits, perform remediation as indicated. In the absence of manufacturer limits, perform remediation if alkalinity (pH) test value is over 10.

3.5 ADHESIVE BOND AND COMPATIBILITY TESTING

A. Comply with requirements and recommendations of floor covering manufacturer.

3.6 APPLICATION OF REMEDIAL FLOOR COATING

A. Comply with requirements and recommendations of coating manufacturer.

END OF SECTION

SECTION 09 2116 - GYPSUM BOARD ASSEMBLIES

PART 1 GENERAL

1.1 SECTION INCLUDES

A. Performance criteria for gypsum board assemblies.
B. Metal channel ceiling framing.
C. Gypsum sheathing.
D. Gypsum wallboard.
E. Joint treatment and accessories.
F. Bullet resistant sheathing and wallboard.

1.2 RELATED REQUIREMENTS

A. Section 07 2100 - Thermal Insulation: Acoustic insulation.
B. Section 07 2500 - Weather Barriers: Water-resistive barrier over sheathing.
C. Section 07 8400 - Firestopping: Top-of-wall assemblies at fire-resistance-rated walls.
D. Section 07 9200 - Joint Sealants: Sealing acoustical gaps in construction other than gypsum board or plaster work.
E. Section 09 2216 - Non-Structural Metal Framing.

1.3 REFERENCE STANDARDS

A. ASTM C475/C475M - Standard Specification for Joint Compound and Joint Tape for Finishing Gypsum Board.
B. ASTM C840 - Standard Specification for Application and Finishing of Gypsum Board.
C. ASTM C954 - Standard Specification for Steel Drill Screws for the Application of Gypsum Panel Products or Metal Plaster Bases to Steel Studs From 0.033 in. (0.84 mm) to 0.112 in. (2.84 mm) in Thickness.
D. ASTM C1002 - Standard Specification for Steel Self-Piercing Tapping Screws for Application of Gypsum Panel Products or Metal Plaster Bases to Wood Studs or Steel Studs.
E. ASTM C1047 - Standard Specification for Accessories For Gypsum Wallboard and Gypsum Veneer Base.
F. ASTM C1177/C1177M - Standard Specification for Glass Mat Gypsum Substrate for Use as Sheathing.
G. ASTM C1280 - Standard Specification for Application of Exterior Gypsum Panel Products for Use as Sheathing.
H. ASTM C1396/C1396M - Standard Specification for Gypsum Board.
I. ASTM D3273 - Standard Test Method for Resistance to Growth of Mold on the Surface of Interior Coatings in an Environmental Chamber.
J. ASTM E84 - Standard Test Method for Surface Burning Characteristics of Building Materials.
K. ASTM G21 - Standard Practice for Determining Resistance of Synthetic Polymeric Materials to Fungi.
L. GA-216 - Application and Finishing of Gypsum Panel Products.
M. UL (FRD) - Fire Resistance Directory.
N. UL 752 - Standard for Bullet-Resisting Equipment.

1.4 ASSEMBLY PERFORMANCE REQUIREMENTS

A. Sound Transmission Characteristics: For gypsum board assemblies with STC ratings, provide materials and construction identical to those of assemblies whose STC ratings were determined according to ASTM E 90 and classified according to ASTM E 413 by a qualified independent testing agency.
B. Fire Resistance: Provide gypsum board assemblies with fire-resistance ratings indicated.

1.5 SUBMITTALS

A. See Section 01 3000 - Administrative Requirements for submittal procedures.
B. Shop Drawings: Indicate special details associated with fireproofing, acoustic seals, and Locations for all control joints.
C. Product Data: Provide data on gypsum board, glass mat faced gypsum board, and accessories.
D. Test Reports: Bullet resistant sheathing and wallboard.

E. All gypsum board materials and accessories must be submitted together. Provide location or partition type information with each product proposed.

1.6 QUALITY ASSURANCE

A. Single-Source Responsibility for Panel Products: Obtain each type of gypsum board and other panel products from a single manufacturer.

B. Single-Source Responsibility for Finishing Materials: Obtain finishing materials from either the same manufacturer that supplies gypsum board and other panel products or from a manufacturer acceptable to gypsum board manufacturer.

C. Fire-Test-Response Characteristics: Where fire-resistance-rated gypsum board assemblies are indicated, provide gypsum board assemblies that comply with the following requirements:
   1. Fire-Resistance Ratings: As indicated by GA File Numbers in GA-600 "Fire Resistance Design Manual" or design designations in UL "Fire Resistance Directory" or in the listing of another testing and inspecting agency acceptable to authorities having jurisdiction.
   2. Gypsum board assemblies indicated are identical to assemblies tested for fire resistance according to ASTM E 119 by an independent testing and inspecting agency acceptable to authorities having jurisdiction.

PART 2 PRODUCTS

2.1 GYPSUM BOARD ASSEMBLIES

A. Provide completed assemblies complying with ASTM C840 and GA-216.
   1. See PART 3 for finishing requirements.

B. Fire-Resistance-Rated Assemblies: Provide completed assemblies with the following characteristics:
   1. Fire-Resistance-Rated Partitions: See Partition Schedule for UL assemblies and associated fire ratings.
   2. UL Assembly Numbers: Provide construction equivalent to that listed for the particular assembly in the current UL (FRD).

2.2 BOARD MATERIALS

A. General: Provide gypsum board of types indicated in maximum lengths available that will minimize end-to-end butt joints in each area indicated to receive gypsum board application.

B. Manufacturers - Gypsum-Based Board:
   1. CertainTeed Corporation: www.certainteed.com/#sle.
   2. Georgia-Pacific Gypsum: www.gpgypsum.com/#sle.
   3. USG Corporation: www.usg.com/#sle.
   4. Substitutions: See Section 01 6000 - Product Requirements.

C. Gypsum Wallboard: Paper-faced gypsum panels as defined in ASTM C1396/C1396M; sizes to minimize joints in place; ends square cut.
   1. Application: Use for vertical surfaces and ceilings, unless otherwise indicated.
   2. Mold Resistance: Score of 10, when tested in accordance with ASTM D3273.
      a. Mold-resistant board is required whenever board is being installed before the building is enclosed and conditioned.
      b. Mold resistant board is required Restroom and Locker room locations.
   3. At Assemblies Indicated with Fire-Resistance Rating: Use type required by indicated tested assembly; if no tested assembly is indicated, use Type X board, UL or WH listed.
   4. Thickness:
      a. Vertical Surfaces: 5/8 inch.
      b. Ceilings: 5/8 inch.
      c. Multi-Layer Assemblies: Thicknesses as indicated on drawings.

5. Water-Resistant Gypsum Backing Board: ASTM C 1396/C 1396M. With moisture- and mold-resistant core and paper surfaces. Mold Resistant Paper Faced Products:
    a. CertainTeed Corporation; M2Tech 5/8" Type X Moisture & Mold Resistant Drywall: www.certainteed.com/#sle.
    b. Georgia-Pacific Gypsum; ToughRock Fireguard X Mold-Guard: www.gpgypsum.com/#sle.
    c. USG Corporation; USG Sheetrock Brand EcoSmart Panels Mold Tough Firecode X: www.usg.com/#sle.
    d. Substitutions: See Section 01 6000 - Product Requirements.
6. Glass Mat Faced Products:
    a. Georgia-Pacific Gypsum; DensArmor Plus: www.gpgypsum.com/#sle.
    b. Substitutions: See Section 01 6000 - Product Requirements.

D. Backing Board For Wet Areas:
1. Application: Surfaces behind tile in wet areas including tub and shower surrounds, shower ceilings, and behind tile in wet areas.
2. Mold Resistance: Score of 10, when tested in accordance with ASTM D3273.

E. Ceiling Board: Special sag resistant gypsum ceiling board as defined in ASTM C1396/C1396M; sizes to minimize joints in place; ends square cut.
1. Application: Ceilings, unless otherwise indicated.
2. Thickness: 5/8 inch.
3. Edges: Tapered.
4. Products:
    a. CertainTeed Corporation; Interior Ceiling Drywall: www.certainteed.com/#sle.
    b. Georgia-Pacific Gypsum; ToughRock Span 24 Ceiling Board: www.gpgypsum.com/#sle.
    c. Substitutions: See Section 01 6000 - Product Requirements.

F. Bullet Resistant Sheathing and Wallboard: Woven roving, multi-ply, ballistic grade fiberglass cloth with thermoset polyester resin; comply with UL 752 Level 1.
1. Thickness: 1/2 inch.
2. In 1-Hour Fire-Resistance-Rated Partitions: UL listed for assembly used.
3. Products:
    a. Armortex Bullet Resistant Fiberglass Panels; Resistance Level 3.
    b. Substitutions: See Section 01 6000 - Product Requirements.

G. Exterior Sheathing Board: Sizes to minimize joints in place; ends square cut.
1. Application: Exterior sheathing, unless otherwise indicated.
2. Mold Resistance: Score of 10, when tested in accordance with ASTM D3273.
3. Fungal Resistance: No fungal growth when tested in accordance with ASTM G21.
4. Glass Mat Faced Sheathing: Glass mat faced gypsum substrate as defined in ASTM C1177/C1177M.
5. Core Type: Type X.
6. Type X Thickness: 5/8 inch.
7. Edges: Square.
8. Glass Mat Faced Products:
    a. CertainTeed Corporation; GlasRoc Type X Exterior Sheathing: www.certainteed.com/#sle.
    b. Georgia-Pacific Gypsum; DensGlass Fireguard Sheathing: www.gpgypsum.com/#sle.
    c. USG Corporation; USG Securock Brand Ultralight Glass-Mat Sheathing Firecode X: www.usg.com/#sle.
    d. Substitutions: See Section 01 6000 - Product Requirements.

2.3 GYPSUM WALLBOARD ACCESSORIES

A. General: Provide auxiliary materials for gypsum board construction that comply with referenced standards and recommendations of gypsum board manufacturer.

B. Acoustic Insulation: As specified in Section 07 2100.
C. Sound Isolation Tape: Elastomeric foam tape for sound decoupling.
   1. Surface Burning Characteristics: Provide assemblies with flame spread index of 75 or less and smoke developed index of 450 or less, when tested in accordance with ASTM E84.
   2. Tape Thickness: 1/4 inch.
D. Water-Resistive Barrier: As specified in Section 07 2500.
E. Finishing Accessories: ASTM C1047, extruded aluminum alloy (6063 T5) or galvanized steel sheet ASTM A924/A924M G90, unless noted otherwise.
   1. Types: As detailed or required for finished appearance.
   2. Special Shapes: In addition to conventional corner bead and control joints, provide U-bead at exposed panel edges.
   3. Products:
      a. Same manufacturer as framing materials.
F. Joint Materials: ASTM C475/C475M and as recommended by gypsum board manufacturer for project conditions.Provide joint treatment materials complying with the recommendations of both the manufacturers of sheet products and of joint treatment materials for each application indicated.
   1. Joint Compound: Drying type, vinyl-based, ready-mixed. Factory-packaged vinyl-based products complying with the following requirements for formulation and intended use.
G. Finishing Compound: Surface coat and primer, takes the place of skim coating.
H. Screws for Fastening of Gypsum Panel Products to Cold-Formed Steel Studs Less than 0.033 inches in Thickness and Wood Members: ASTM C1002; self-piercing tapping screws, corrosion-resistant.
I. Screws for Fastening of Gypsum Panel Products to Steel Members from 0.033 to 0.112 inch in Thickness: ASTM C954; steel drill screws, corrosion-resistant.

PART 3 EXECUTION

3.1 EXAMINATION

A. Verify that project conditions are appropriate for work of this section to commence.
B. Environmental Conditions, General: Establish and maintain environmental conditions for applying and finishing gypsum board to comply with ASTM C 840 requirements or gypsum board manufacturer's recommendations, whichever are more stringent.
C. Room Temperatures: For nonadhesive attachment of gypsum board to framing, maintain not less than 40 deg F (4 deg C). For adhesive attachment and finishing of gypsum board, maintain not less than 50 deg F (10 deg C) for 48 hours before application and continuously after until dry. Do not exceed 95 deg F (35 deg C) when using temporary heat sources.
D. Ventilation: Ventilate building spaces as required to dry joint treatment materials. Avoid drafts during hot, dry weather to prevent finishing materials from drying too rapidly.
E. Examine substrates to which gypsum board assemblies attach or abut, installed hollow metal frames, cast-in-anchors, and structural framing, with Installer present, for compliance with requirements for installation tolerances and other conditions affecting performance of assemblies specified in this Section.
F. Do not proceed with installation until unsatisfactory conditions have been corrected.

3.2 DELIVERY, STORAGE, AND HANDLING

A. Deliver materials in original packages, containers, or bundles bearing brand name and identification of manufacturer or supplier.
B. Store materials inside under cover and keep them dry and protected against damage from weather, direct sunlight, surface contamination, corrosion, construction traffic, and other causes. Neatly stack gypsum panels flat to prevent sagging.

3.3 PREPARATION

A. Ceiling Anchorages: Coordinate installation of ceiling suspension systems with installation of overhead structural assemblies to ensure that inserts and other provisions for anchorages to building structure have been installed to receive ceiling hangers that will develop their full strength and at spacing required to support ceilings.

3.4 SUSPENDED AND FURRED CEILINGS INSTALLATION

A. Suspended Ceilings and Soffits: Space framing and furring members as indicated.
   1. Level ceiling system to a tolerance of 1/1200.
   2. Laterally brace entire suspension system.
   3. Install bracing as required at exterior locations to resist wind uplift.

B. Suspend ceiling hangers from building structural members and as follows:
   1. Install hangers plumb and free from contact with insulation or other objects within ceiling plenum that are not part of supporting structural or ceiling suspension system. Splay hangers only where required to miss obstructions and offset resulting horizontal forces by bracing, countersplaying, or other equally effective means.
   2. Where width of ducts and other construction within ceiling plenum produces hanger spacings that interfere with the location of hangers required to support standard suspension system members, install supplemental suspension members and hangers in form of trapezes or equivalent devices. Size supplemental suspension members and hangers to support ceiling loads within performance limits established by referenced standards.
   3. Secure wire hangers by looping and wire-tying, either directly to structures or to inserts, eyescrews, or other devices and fasteners that are secure and appropriate for substrate, and in a manner that will not cause them to deteriorate or otherwise fail.
   4. Do not attach hangers to steel deck tabs.
   5. Do not attach hangers to steel roof deck. Attach hangers to structural members.
   6. Do not connect or suspend steel framing from ducts, pipes, or conduit.

C. Installation Tolerances: Install steel framing components for suspended ceilings so that cross-furring or grid suspension members are level to within 1/8 inch in 12 feet as measured both lengthwise on each member and transversely between parallel members.

D. Wire-tie or clip furring members to main runners and to other structural supports as indicated.

E. Grid Suspension System: Attach perimeter wall track or angle where grid suspension system meets vertical surfaces. Mechanically join main beam and cross-furring members to each other and butt-cut to fit into wall track.

3.5 ACOUSTIC ACCESSORIES INSTALLATION

A. Acoustic Insulation: Place tightly within spaces, around cut openings, behind and around electrical and mechanical items within partitions, and tight to items passing through partitions.

B. Sound Isolation Tape: Apply to vertical studs and top and bottom tracks/runners in accordance with manufacturer's instructions.

C. Acoustic Sealant: Install in accordance with manufacturer's instructions.

3.6 BOARD INSTALLATION

A. Comply with ASTM C840, GA-216, and manufacturer's instructions. Install to minimize butt end joints, especially in highly visible locations.

B. Single-Layer Nonrated: Install gypsum board in most economical direction, with ends and edges occurring over firm bearing. Install gypsum wallboard panels as follows:
   1. On ceilings, apply gypsum panels prior to wall/partition board application to the greatest extent possible and at right angles to framing, unless otherwise indicated.
   2. On partitions/walls, apply gypsum panels vertically (parallel to framing), unless otherwise indicated, and provide panel lengths that will minimize end joints.

a. Stagger abutting end joints not less than one framing member in alternate courses of board.
3. On Z-furring members, apply gypsum panels vertically (parallel to framing) with no end joints. Locate edge joints over furring members.
4. Apply gypsum panels to supports with screws.
5. Exception: Tapered edges to receive joint treatment at right angles to framing.

C. Fire-Resistance-Rated Construction: Install gypsum board in strict compliance with requirements of assembly listing.

D. Exposed Gypsum Board in Interior Wet Areas: Seal joints, cut edges, and holes with water-resistant sealant.

E. Exterior Sheathing: Comply with ASTM C1280. Install sheathing vertically, with edges butted tight and ends occurring over firm bearing.
1. Paper-Faced Sheathing: Immediately after installation, protect from weather by application of water-resistive barrier.

F. Bullet Resistant Sheathing and Wallboard:
1. Install bullet-resistant sheathing according to manufacturer's written recommendations and with manufacturer-approved fasteners.
2. Cover all joints between boards with a 4 inch strip of the same thickness material as the boards, centered on the joint.

3.7 APPLYING AND FINISHING GYPSUM BOARD

A. Install sound-attenuation blankets, where indicated, prior to installing gypsum panels unless blankets are readily installed after panels have been installed on one side.

B. Install ceiling board panels across framing to minimize the number of abutting end joints and to avoid abutting end joints in the central area of each ceiling. Stagger abutting end joints of adjacent panels not less than one framing member.

C. Install gypsum panels with face side out. Do not install imperfect, damaged, or damp panels. Butt panels together for a light contact at edges and ends with not more than 1/16 inch of open space between panels. Do not force into place.

D. Locate both edge or end joints over supports, except in ceiling applications where intermediate supports or gypsum board back-blocking is provided behind end joints. Do not place tapered edges against cut edges or ends. Stagger vertical joints on opposite sides of partitions. Avoid joints other than control joints at corners of framed openings where possible.

E. Attach gypsum panels to framing provided at openings and cutouts.

F. Form control and expansion joints at locations indicated and as detailed, with space between edges of adjoining gypsum panels, as well as supporting framing behind gypsum panels.

G. Where STC-rated gypsum board assemblies are indicated, seal construction at perimeters, behind control and expansion joints, openings, and penetrations with a continuous bead of acoustical sealant including a bead at both faces of the partitions. Comply with ASTM C 919 and manufacturer's recommendations for location of edge trim and closing off sound-flanking paths around or through gypsum board assemblies, including sealing partitions above acoustical ceilings.

H. Space fasteners in gypsum panels according to referenced gypsum board application and finishing standard and manufacturer's recommendations.
1. Space screws a maximum of 12 inches o.c. for vertical applications.
2. Space fasteners in panels that are tile substrates a maximum of 8 inches o.c.

3.8 INSTALLATION OF TRIM AND ACCESSORIES

A. General: For trim accessories with back flanges, fasten to framing with the same fasteners used to fasten gypsum board. Otherwise, fasten trim accessories according to accessory manufacturer's directions for type, length, and spacing of fasteners.

B. Control Joints: Place control joints consistent with lines of building spaces and as indicated.
1. Not more than 30 feet apart on walls and ceilings over 50 feet long.

2. In specific locations approved by Architect for visual effect.
3. Review control joints with Architect prior to placement.

C. Corner Beads: Install at external corners, using longest practical lengths.

D. Edge Trim: Install at locations where gypsum board abuts dissimilar materials or where edge of gypsum panels would otherwise be exposed. Provide edge trim type with face flange formed to receive joint compound, except where other types are indicated.

3.9 JOINT TREATMENT

A. General: Treat gypsum board joints, interior angles, flanges of cornerbead, edge trim, control joints, penetrations, fastener heads, surface defects, and elsewhere as required to prepare gypsum board surfaces for decoration.

B. Prefill open joints, rounded or beveled edges, and damaged areas using setting-type joint compound.

C. Apply joint tape over gypsum board joints, except those with trim accessories having flanges not requiring tape.

D. Apply joint tape over gypsum board joints and to flanges of trim accessories as recommended by trim accessory manufacturer.

E. Glass Mat Faced Gypsum Board and Exterior Glass Mat Faced Sheathing: Use fiberglass joint tape, embed and finish with setting type joint compound.

F. Finish gypsum board in accordance with levels defined in ASTM C840, as follows:
1. Level 4: Walls and ceilings to receive paint finish or wall coverings, unless otherwise indicated.
2. Level 1: Fire-resistance-rated wall areas above finished ceilings, whether or not accessible in the completed construction.

G. For Level 4 gypsum board finish, embed tape in joint compound and apply first, fill (second), and finish (third) coats of joint compound over joints, angles, fastener heads, and accessories. Touch up and sand between coats and after last coat as needed to produce a surface free of visual defects and ready for decoration.

H. Tape, fill, and sand exposed joints, edges, and corners to produce smooth surface ready to receive finishes.
1. Feather coats of joint compound so that camber is maximum 1/32 inch.

I. Where Level 5 finish is indicated, spray apply high build drywall surfacer over entire surface after joints have been properly treated; achieve a flat and tool mark-free finish.

3.10 TOLERANCES

A. Maximum Variation of Finished Gypsum Board Surface from True Flatness: 1/8 inch in 10 feet in any direction.

END OF SECTION

SECTION 09 2216 - NON-STRUCTURAL METAL FRAMING

PART 1 GENERAL

1.1 SECTION INCLUDES

A. Metal partition, ceiling, and soffit framing.
B. Framing accessories.

1.2 RELATED REQUIREMENTS

A. Section 07 2100 - Thermal Insulation: Acoustic insulation.
B. Section 07 8400 - Firestopping: Sealing top-of-wall assemblies at fire-resistance-rated walls.

1.3 REFERENCE STANDARDS

A. AISI S100 - North American Specification for the Design of Cold-Formed Steel Structural Members.
B. AISI S220 - North American Standard for Cold-Formed Steel Nonstructural Framing.
C. ASTM A36/A36M - Standard Specification for Carbon Structural Steel.
D. ASTM A653/A653M - Standard Specification for Steel Sheet, Zinc-Coated (Galvanized) or Zinc-Iron Alloy-Coated (Galvannealed) by the Hot-Dip Process.
E. ASTM A1003/A1003M - Standard Specification for Steel Sheet, Carbon, Metallic- and Nonmetallic-Coated for Cold-Formed Framing Members.
F. ASTM C1007 - Standard Specification for Installation of Load Bearing (Transverse and Axial) Steel Studs and Related Accessories.
G. ASTM C754 - Standard Specification for Installation of Steel Framing Members to Receive Screw-Attached Gypsum Panel Products.
H. ASTM C1002 - Standard Specification for Steel Self-Piercing Tapping Screws for Application of Gypsum Panel Products or Metal Plaster Bases to Wood Studs or Steel Studs.
I. ASTM E84 - Standard Test Method for Surface Burning Characteristics of Building Materials.
J. GA-600 - Fire Resistance Design Manual.

1.4 SUBMITTALS

A. See Section 01 3000 - Administrative Requirements for submittal procedures.
B. Product Data: Provide data describing framing member materials and finish, product criteria, load charts, and limitations.
C. Product Data: Provide manufacturer's data on partition head to structure connectors, showing compliance with requirements.

1.5 QUALITY ASSURANCE

A. Installer Qualifications: Company specializing in performing the work of this section with minimum five years documented experience and approved by manufacturer.
B. Manufacturer Qualifications: Member of Steel Stud Manufacturers Association (SSMA): www.ssma.com/#sle.

PART 2 PRODUCTS

2.1 MANUFACTURERS

A. Metal Framing, Connectors, and Accessories:
   1. CEMCO: www.cemcosteel.com/#sle.
   2. ClarkDietrich: www.clarkdietrich.com/#sle.
   3. Substitutions: See Section 01 6000 - Product Requirements.

2.2 FRAMING MATERIALS

A. Fire-Resistance-Rated Assemblies: Comply with applicable code and as indicated on drawings.
B. Firestopping: Materials meeting requirements necessary to maintain rating of penetrated assembly.

1. See Section 07 8400.

C. Non-Loadbearing Framing System Components: AISI S220; sheet steel, of size and properties necessary for the spacing indicated, with maximum deflection of wall framing of L/240 at 5 psf.
   1. Studs: C-shaped with flat faces.
      a. Products:
         1) CEMCO; CT Studs: www.cemcosteel.com/#sle.
         2) ClarkDietrich; ProSTUD: www.clarkdietrich.com/#sle.
         3) Substitutions: See Section 01 6000 - Product Requirements.
   2. Runners: U-shaped, sized to match studs.
   3. Ceiling Channels: C-shaped.
   4. Furring: Hat-shaped sections, minimum depth of 7/8 inch.
   5. Resilient Furring Channels: Single or double leg configuration; 1/2 inch channel depth.

D. Partition Head to Structure Connections: Provide mechanical anchorage devices that accommodate deflection using slotted holes, screws, and anti-friction bushings, preventing rotation of studs while maintaining structural performance of partition.
   1. Structural Performance: Maintain lateral load resistance and vertical movement capacity required by applicable code when evaluated in accordance with AISI S100.
   2. Material: ASTM A653/A653M steel sheet, SS Grade 50.

E. Deflection and Firestop Track: Intumescent strip factory-applied to track flanges expands when exposed to heat or flames to provide a perimeter joint seal.

F. Non-Loadbearing Framing Accessories:
   1. Ceiling Hangers: Type and size as specified in ASTM C754 for spacing required.
   2. Partial Height Wall Framing Support: Provides stud reinforcement and anchored connection to floor.
      a. Materials: ASTM A36/A36M formed sheet steel support member with factory-welded ASTM A1003/A1003M steel plate base.
   3. Bracing and Bridging: ASTM A653/A653M G90 galvanized steel; for lateral bracing of wall studs with slots for engaging on-module studs.
   4. Framing Connectors: ASTM A653/A653M steel clips; secures cold rolled channel to wall studs for lateral bracing.
   5. Fasteners: ASTM C1002 self-piercing self-tapping screws.
   6. Acoustic Insulation: See Section 07 2100.

G. Sound Isolation Tape: Elastomeric foam tape for sound decoupling.
   1. Surface Burning Characteristics: Provide assemblies with flame spread index of 75 or less and smoke developed index of 450 or less, when tested in accordance with ASTM E84.
   2. Tape Thickness: 1/4 inch.

PART 3 EXECUTION

3.1 INSTALLATION OF STUD FRAMING

A. Install non-structural members in accordance with ASTM C754.

B. Extend partition framing to structure where indicated and to ceiling in other locations.

C. Partitions Terminating at Ceiling: Attach ceiling runner securely to ceiling track in accordance with manufacturer's instructions.

D. Fire-Resistance-Rated Construction: Install framing and accessories in accordance with requirements of fire-resistance-rated assembly and to GA-600 requirements.

E. Align and secure top and bottom runners at 24 inches on center.

F. Fit runners under and above openings; secure intermediate studs to same spacing as wall studs.

G. Install studs vertically at spacing indicated on drawings.
H. Align stud web openings horizontally.
I. Secure studs to tracks using crimping method. Do not weld.
J. Stud splicing is not permissible.
K. Fabricate corners using a minimum of three studs.
L. Install double studs at wall openings, door and window jambs, not more than 2 inches from each side of openings.
M. Coordinate installation of bucks, anchors, and blocking with electrical, mechanical, and other work to be placed within or behind stud framing.
N. Furring: Install at spacing and locations shown on drawings. Lap splices a minimum of 6 inches.

3.2 CEILING AND SOFFIT FRAMING

A. Install furring after work above ceiling or soffit is complete. Coordinate the location of hangers with other work.
B. Install furring independent of walls, columns, and above-ceiling work.
C. Securely anchor hangers to structural members or embed them in structural slab. Space hangers as required to limit deflection to criteria indicated. Use rigid hangers at exterior soffits.
D. Space main carrying channels at maximum 72 inches on center, and not more than 6 inches from wall surfaces. Lap splice securely.
E. Securely fix carrying channels to hangers to prevent turning or twisting and to transmit full load to hangers.
F. Place furring channels perpendicular to carrying channels, not more than 2 inches from perimeter walls, and rigidly secure. Lap splices securely.
G. Reinforce openings in suspension system that interrupt main carrying channels or furring channels with lateral channel bracing. Extend bracing minimum 24 inches past each opening.
H. Laterally brace suspension system.

3.3 TOLERANCES

A. Maximum Variation From True Position: 1/8 inch in 10 feet.
B. Maximum Variation From Plumb: 1/8 inch in 10 feet.

END OF SECTION

SECTION 09 3000 - TILING

PART 1 GENERAL

1.1 SECTION INCLUDES

A. Tile for floor applications.
B. Tile for wall applications.
C. Cementitious backer board as tile substrate.
D. Stone thresholds.
E. Non-ceramic trim.

1.2 RELATED REQUIREMENTS

A. Section 07 9200 - Joint Sealants: Sealing joints between tile work and adjacent construction and fixtures.
B. Section 09 0561 - Common Work Results for Flooring Preparation: Concrete slab moisture and alkalinity testing and remediation procedures.
C. Section 09 2116 - Gypsum Board Assemblies: Tile backer board.

1.3 REFERENCE STANDARDS

A. ANSI A108/A118/A136 - American National Standard Specifications for the Installation of Ceramic Tile (Compendium).
B. ANSI A108.1a - American National Standard Specifications for Installation of Ceramic Tile in the Wet-Set Method, with Portland Cement Mortar.
C. ANSI A108.6 - American National Standard Specifications for Installation of Ceramic Tile with Chemical Resistant, Water Cleanable Tile-Setting and -Grout Epoxy.
D. ANSI A108.10 - American National Standard Specifications for Installation of Grout in Tilework.
E. ANSI A108.11 - American National Standard Specifications for Interior Installation of Cementitious Backer Units.
F. ANSI A108.19 - American National Standard Specifications for Interior Installation of Gauged Porcelain Tiles and Gauged Porcelain Tile Panels/Slabs by the Thin-Bed Method Bonded with Modified Dry-Set Cement Mortar or Improved Modified Dry-Set Cement Mortar.
G. ANSI A118.7 - American National Standard Specifications for High Performance Cement Grouts for Tile Installation.
H. ANSI A118.10 - American National Standard Specifications for Load Bearing, Bonded, Waterproof Membranes for Thin-Set Ceramic Tile and Dimension Stone Installation.
I. ANSI A118.12 - American National Standard Specifications for Crack Isolation Membranes for Thin-Set Ceramic Tile and Dimension Stone Installation.
J. ANSI A137.1 - American National Standard Specifications for Ceramic Tile.
K. ASTM F1869 - Standard Test Method for Measuring Moisture Vapor Emission Rate of Concrete Subfloor Using Anhydrous Calcium Chloride.
L. TCNA (HB) - Handbook for Ceramic, Glass, and Stone Tile Installation.

1.4 ADMINISTRATIVE REQUIREMENTS

A. Preinstallation Meeting: Convene a preinstallation meeting one week before starting work of this section; require attendance by affected installers.

1.5 SUBMITTALS

A. See Section 01 3000 - Administrative Requirements for submittal procedures.
B. Product Data: Provide manufacturers' data sheets on tile, mortar, grout, and accessories. Include instructions for using grouts and adhesives.
C. Shop Drawings: Indicate tile layout, patterns, color arrangement, perimeter conditions, junctions with dissimilar materials, control and expansion joints, thresholds, ceramic accessories, and setting details.
D. Samples: Tile 12 x 24 or full size sample if smaller in size - illustrating pattern

E. Installer's Qualification Statement:
   1. Submit documentation of National Tile Contractors Association (NTCA) or Tile Contractors' Association of America (TCAA) accreditation; www.tile-assn.com/#sle
F. Maintenance Data: Include recommended cleaning methods, cleaning materials, and stain removal methods.
G. Maintenance Materials: Furnish the following for Owner's use in maintenance of project.
   1. See Section 01 6000 - Product Requirements, for additional provisions.
   2. Extra Tile: PT-1 - 5 Tiles/ PT-2 - 15 Tiles/PT-3 - 12 tiles/PT-4 - 6 tiles/CT-1 - 6 tiles

1.6 QUALITY ASSURANCE

A. Maintain one copy of ANSI A108/A118/A136, TCNA (HB), and TCNA (HB-GP) on-site.
B. Manufacturer Qualifications: Company specializing in manufacturing the types of products specified in this section, with minimum five years of documented experience.
C. Installer Qualifications: Natural Stone Institute (NSI) Accredited Commercial B Contractor (light commercial): www.naturalstoneinstitute.org/#sle.
D. Installer Qualifications:
   1. Company specializing in performing tile installation, with minimum of five years of documented experience.
      a. Accredited Five-Star member of the National Tile Contractors Association (NTCA) or Trowel of Excellence member of the Tile Contractors' Association of America (TCAA).

1.7 MOCK-UPS

A. See Section 01 4000 - Quality Requirements for general requirements for mock-up.
B. Construct PT-4 tile mock-up at 142 Corridor at Water Coolers, incorporating all components specified for the location - including Schluter Trims.
   1. East wall full height.
   2. Approved mock-up may remain as part of work.
   3. Mock up location

1.8 DELIVERY, STORAGE, AND HANDLING

A. Protect adhesives from freezing or overheating in accordance with manufacturer's instructions.

1.9 FIELD CONDITIONS

A. Do not install solvent-based products in an unventilated environment.
B. Maintain ambient and substrate temperature above 50 degrees F and below 100 degrees F during installation and curing of setting materials.

PART 2 PRODUCTS

2.1 TILE

A. Manufacturers: As indicated on Sheet A800 .
   1. Atlas Concorde: www.atlasconcorde.com/#sle.
   2. Dal-Tile Corporation: www.daltile.com/#sle.
   3. Platform Surfaces: www.platformsurfaces.com/#sle.
   4. Del Conca USA: www.delconcausa.com/#sle.
   5. Substitutions: See Section 01 6000 - Product Requirements.
B. Ceramic Mosaic Tile, Type CT-1: ANSI A137.1 standard grade.
   1. Moisture Absorption: 0 to 0.5 percent as tested in accordance with ASTM C373.
   2. Size: 4 by 12 inch, nominal.
   3. Shape: Rectangle.
   4. Edges: Square.
   5. Surface Finish: Matte glazed.
   6. Color: As indicated on drawings.

C. Porcelain Tile, Type PT-1, PT-2, PT-3, PT-4: ANSI A137.1 standard grade.
   1. Moisture Absorption: 0 to 0.5 percent as tested in accordance with ASTM C373.
   2. Size: Varies - as indicated on Sheet A800
   3. Thickness: 3/8 inch.
   4. Edges: Square.
   5. Surface Finish: As indicated on Sheet A800.
   6. Color(s): As indicated on drawings.
   7. Pattern: As indicated on Drawings.

2.2 TRIM AND ACCESSORIES

A. Non-Ceramic Trim: Refer to A800 , style and dimensions to suit application, set with tile mortar or adhesive.
   1. Applications:
      a. Open edges of wall and floor tile.
      b. Outside wall corners.
      c. Transition between floor finishes of different heights.
      d. Thresholds at door openings.
      e. Floor-to-wall joints.
   2. Products:
      a. Schluter-Systems; Schiene: www.schluter.com/#sle.
      b. Substitutions: See Section 01 6000 - Product Requirements.

B. Thresholds: 2 inches wide by full width of wall or frame opening; beveled edge on both long edges; without holes, cracks, or open seams.
   1. Thickness: 3/8 inch.
   2. Material: Marble, polished finish.
   3. Material: Artificial stone tile; 93 percent quartz aggregate, resin, color pigments.
   4. Color and Pattern: As indicated on drawings.
   5. Applications:
      a. At doorways as indicated on drawings.

2.3 SETTING MATERIALS

A. Provide setting and grout materials from same manufacturer.

B. Manufacturers:
   1. LATICRETE International, Inc: www.laticrete.com/#sle.
   2. Substitutions: See Section 01 6000 - Product Requirements.

C. Latex-Portland Cement Mortar Bond Coat: ANSI A118.4.
   1. Applications: Use this type of bond coat where Large and Heavy Tile (LHT) mortar is indicated.
   2. Products:
      a. LATICRETE International, Inc; TRI-LITE: www.laticrete.com/#sle.
      b. Substitutions: See Section 01 6000 - Product Requirements.

D. Mortar Bed Materials: Pre-packaged mix of Portland cement, sand, latex additive, and water.
   1. Products:
      a. LATICRETE International, Inc; LATICRETE 3701 Fortified Mortar Bed: www.laticrete.com/#sle.
      b. Mapei Corporation; 4 to 1 Mud Bed Mix: www.mapei.com/#sle.
      c. Substitutions: See Section 01 6000 - Product Requirements.

2.4 GROUTS

A. Provide setting and grout materials from same manufacturer.

B. Grout Size per manufacturer's recommendation.

C. Manufacturers:
   1. LATICRETE International, Inc; Spectralock Pro: www.laticrete.com/#sle.

2. Mapei Corporation; Ultracolor Plus FA: www.mapei.com/#sle.
3. Substitutions: See Section 01 6000 - Product Requirements.

D. Premixed Polymer Modified Grout: Single component, stain resistant grout.
1. Applications: Where indicated.
2. Use for joints 1/16 inch to 1/4 inch wide.
3. Color(s): As indicated on drawings.

2.5 MAINTENANCE MATERIALS

A. Tile Sealant: Gunnable, silicone, siliconized acrylic, or urethane sealant; moisture and mildew resistant type.
1. Applications: Between tile and plumbing fixtures.
2. Color(s): As selected by Architect from manufacturer's full line.
3. Products:
a. LATICRETE International, Inc; LATICRETE LATASIL: www.laticrete.com/#sle.
b. Substitutions: See Section 01 6000 - Product Requirements.

B. Tile Sealant: Two-component, semi-rigid, 100 percent epoxy sealant; resistant to rolling loads.
1. Applications: Nonmoving and saw-cut control and construction joints in tile flooring.

2.6 ACCESSORY MATERIALS

A. Concrete Floor Slab Crack Isolation Membrane: Material complying with ANSI A118.12; not intended as waterproofing.
1. Crack Resistance: No failure at 1/8 inch gap, minimum.
2. Fluid or Trowel Applied Type:
a. Material: Synthetic rubber or Acrylic.
b. Thickness: 20 mils, maximum.
c. Products:
1) LATICRETE International, Inc; LATICRETE FRACTURE BAN SC: www.laticrete.com/#sle.
2) Mapei Corporation; Mapelastic CI: www.mapei.com/#sle.
3) Sika Corp; SikaTile 200 Fracture Guard Rapid: www.sika.com/#sle.
4) Substitutions: See Section 01 6000 - Product Requirements.

B. Waterproofing Membrane at Floors: Specifically designed for bonding to cementitious substrate under thick mortar bed or thin-set tile; complying with ANSI A118.10.
1. Crack Resistance: No failure at 1/16 inch gap, minimum; comply with ANSI A118.12.
2. Fluid or Trowel Applied Type:
a. Material: Synthetic rubber or Acrylic.
b. Thickness: 25 mils, minimum, dry film thickness.
c. Products:
1) LATICRETE International, Inc; LATICRETE HYDRO BAN: www.laticrete.com/#sle.
2) Sika Corp; SikaTile 100 Moisture Guard: www.sika.com/#sle.
3) Substitutions: See Section 01 6000 - Product Requirements.

C. Backer Board: Cementitious type complying with ANSI A118.9; high density, glass fiber reinforced, 7/16 inch thick; 2 inch wide coated glass fiber tape for joints and corners.
1. Products:
a. Custom Building Products; WonderBoard Lite Backerboard: www.custombuildingproducts.com/#sle.
b. Substitutions: See Section 01 6000 - Product Requirements.

PART 3 EXECUTION

3.1 EXAMINATION

A. Verify that subfloor surfaces are smooth and flat within the tolerances specified for that type of work and are ready to receive tile.
B. Verify that wall surfaces are smooth and flat within the tolerances specified for that type of work, are dust-free, and are ready to receive tile.
C. Verify that subfloor surfaces are dust free and free of substances that could impair bonding of setting materials to subfloor surfaces.
D. Cementitious Subfloor Surfaces: Verify that substrates are ready for tiling installation by testing for moisture and alkalinity (pH).
   1. Obtain instructions if test results are not within limits recommended by tiling material manufacturer and setting material manufacturer.
   2. Follow moisture and alkalinity remediation procedures in Section 09 0561.
E. Verify that required floor-mounted utilities are in correct location.

3.2 PREPARATION

A. Protect surrounding work from damage.
B. Vacuum clean surfaces and damp clean.
C. Seal substrate surface cracks with filler. Level existing substrate surfaces to acceptable flatness tolerances.
D. Install backer board in accordance with ANSI A108.11 and board manufacturer's instructions. Tape joints and corners, cover with skim coat of setting material to a feather edge.
E. Prepare substrate surfaces for adhesive installation in accordance with adhesive manufacturer's instructions.

3.3 INSTALLATION - GENERAL

A. Install tile and thresholds and grout in accordance with applicable requirements of ANSI A108.1a through ANSI A108.20, manufacturer's instructions, and TCNA (HB) or TCNA (HB-GP) recommendations, as applicable.
B. Lay tile to pattern indicated. Do not interrupt tile pattern through openings.
C. Cut and fit tile to penetrations through tile, leaving sealant joint space. Form corners and bases neatly. Align floor joints.
D. Place tile joints uniform in width, subject to variance in tolerance allowed in tile size. Make grout joints without voids, cracks, excess mortar or excess grout, or too little grout.
E. Form internal angles square and external angles bullnosed.
F. Install non-ceramic trim in accordance with manufacturer's instructions.
G. Install thresholds where indicated.
H. Sound tile after setting. Replace hollow sounding units.
I. Keep control and expansion joints free of mortar, grout, and adhesive.
J. Prior to grouting, allow installation to completely cure; minimum of 48 hours.
K. Grout tile joints unless otherwise indicated. Use standard grout unless otherwise indicated.
L. At changes in plane and tile-to-tile control joints, use tile sealant instead of grout, with either bond breaker tape or backer rod as appropriate to prevent three-sided bonding.

3.4 INSTALLATION - FLOORS - THIN-SET METHODS

A. Over interior concrete substrates, install in accordance with TCNA (HB) Method F113, dry-set or latex-Portland cement bond coat, with standard grout.
   1. Where waterproofing membrane is indicated, install in accordance with TCNA (HB) Method F122, with latex-Portland cement grout.
B. Install tile-to-tile floor movement joints in accordance with TCNA (HB) Method EJ171F.

3.5 INSTALLATION - WALL TILE

A. On exterior walls install in accordance with TCNA (HB) Method W244, thin-set over cementitious backer units, with waterproofing membrane.

B. Over cementitious backer units on studs, install in accordance with TCNA (HB) Method W244, using membrane at toilet rooms.

C. Over gypsum wallboard on wood or metal studs install in accordance with TCNA (HB) Method W243, thin-set with dry-set or latex-Portland cement bond coat, unless otherwise indicated.

   1. Where waterproofing membrane is indicated other than at showers and bathtub walls, install in accordance with TCNA (HB) Method W222, one coat method.

D. Over interior concrete and masonry install in accordance with TCNA (HB) Method W202, thin-set with dry-set or latex-Portland cement bond coat.

3.6 CLEANING

A. Clean tile and grout surfaces.

3.7 PROTECTION

A. Do not permit traffic over finished floor surface for 4 days after installation.

END OF SECTION

SECTION 09 5100 - ACOUSTICAL CEILINGS

PART 1 GENERAL

1.1 SECTION INCLUDES

A. Suspended metal grid ceiling system.
B. Acoustical units.

1.2 RELATED REQUIREMENTS

A. Section 07 2100 - Thermal Insulation: Acoustical insulation.

1.3 REFERENCE STANDARDS

A. ASCE 7 - Minimum Design Loads and Associated Criteria for Buildings and Other Structures.
B. ASTM C635/C635M - Standard Specification for Manufacture, Performance, and Testing of Metal Suspension Systems for Acoustical Tile and Lay-in Panel Ceilings.
C. ASTM C636/C636M - Standard Practice for Installation of Metal Ceiling Suspension Systems for Acoustical Tile and Lay-In Panels.
D. ASTM E580/E580M - Standard Practice for Installation of Ceiling Suspension Systems for Acoustical Tile and Lay-in Panels in Areas Subject to Earthquake Ground Motions.
E. ASTM E1264 - Standard Classification for Acoustical Ceiling Products.

1.4 SUBMITTALS

A. See Section 01 3000 - Administrative Requirements for submittal procedures.
B. Shop Drawings: Indicate grid layout and related dimensioning and junctions with other ceiling finishes.
C. Product Data: Provide data on suspension system components and acoustical units.
D. Manufacturer's Installation Instructions: Indicate special procedures and perimeter conditions requiring special attention.
E. Maintenance Materials: Furnish the following for Owner's use in maintenance of project.
    1. See Section 01 6000 - Product Requirements, for additional provisions.
    2. Extra Acoustical Units: Quantity equal to 1 percent of total installed.

1.5 QUALITY ASSURANCE

A. Suspension System Manufacturer Qualifications: Company specializing in manufacturing the products specified in this section with minimum three years documented experience.
B. Acoustical Unit Manufacturer Qualifications: Company specializing in manufacturing the products specified in this section with minimum three years documented experience.

1.6 FIELD CONDITIONS

A. Maintain uniform temperature of minimum 60 degrees F, and maximum humidity of 40 percent prior to, during, and after acoustical unit installation.

PART 2 PRODUCTS

2.1 MANUFACTURERS

A. Acoustic Tiles/Panels:
    1. Armstrong World Industries, Inc: www.armstrongceilings.com/#sle.
    2. Substitutions: See Section 01 6000 - Product Requirements.
B. Suspension Systems:
    1. Same as for acoustical units.

2.2 PERFORMANCE REQUIREMENTS

A. Seismic Performance: Ceiling systems designed to withstand the effects of earthquake motions determined according to ASCE 7 for Seismic Design Category D, E, or F and complying with the following:
    1. Local authorities having jurisdiction.

2.3 ACOUSTICAL UNITS

A. Acoustical Units - General: ASTM E1264, Class A.
B. Acoustical Tiles: Mineral fiber with membrane-faced overlay, with the following characteristics:
   1. Classification: ASTM E1264 Type IV.
   2. Size: 24 by 24 inches.
   3. Thickness: 3/4 inch.
   4. Tile Edge: Tegular.
   5. Color: White.
   6. Suspension System: Exposed grid.
   7. Minimum Noise Reduction Class: 0.75 NRC
   8. Products:
      a. Armstrong World Industries, Inc; Ultima: www.armstrongceilings.com/#sle.

2.4 SUSPENSION SYSTEM(S)

A. Metal Suspension Systems - General: Complying with ASTM C635/C635M; die cut and interlocking components, with perimeter moldings, hold down clips, stabilizer bars, clips, and splices as required.
B. Exposed Suspension System: Hot-dip galvanized steel grid with steel cap.
   1. Application(s): Seismic.
   2. Structural Classification: Intermediate-duty, when tested in accordance with ASTM C635/C635M.
   3. Profile: Tee; 15/16 inch face width.
   4. Finish: Baked enamel.
   5. Color: White.
   6. Products:
      a. Armstrong World Industries, Inc: www.armstrongceilings.com/#sle.
      b. Substitutions: See Section 01 6000 - Product Requirements.

2.5 ACCESSORIES

A. Support Channels and Hangers: Galvanized steel; size and type to suit application, seismic requirements, and ceiling system flatness requirement specified.
B. Hanger Wire: 12 gauge, 0.08 inch galvanized steel wire.
C. Seismic Clips: Manufacturer's standard clips for seismic conditions and to suit application.
D. Perimeter Moldings: Same metal and finish as grid.
   1. Size: As required for installation conditions and specified Seismic Design Category.
   2. Angle Molding: L-shaped, for mounting at same elevation as face of grid.

PART 3 EXECUTION

3.1 EXAMINATION

A. Verify existing conditions before starting work.
B. Verify that layout of hangers will not interfere with other work.

3.2 INSTALLATION - SUSPENSION SYSTEM

A. Install suspension system in accordance with ASTM C636/C636M, ASTM E580/E580M, and manufacturer's instructions and as supplemented in this section.
B. Rigidly secure system, including integral mechanical and electrical components, for maximum deflection of 1:360.
C. Locate system on room axis according to reflected plan.
D. Perimeter Molding: Install at intersection of ceiling and vertical surfaces and at junctions with other interruptions.
   1. Use longest practical lengths.

E. Suspension System, Non-Seismic: Hang suspension system independent of walls, columns, ducts, pipes and conduit. Where carrying members are spliced, avoid visible displacement of face plane of adjacent members.
F. Seismic Suspension System, Seismic Design Categories D, E, F: Hang suspension system with grid ends attached to the perimeter molding on two adjacent walls; on opposite walls, maintain a 3/4 inch clearance between grid ends and wall.
G. Where ducts or other equipment prevent the regular spacing of hangers, reinforce the nearest affected hangers and related carrying channels to span the extra distance.
H. Do not support components on main runners or cross runners if weight causes total dead load to exceed deflection capability.
I. Support fixture loads using supplementary hangers located within 6 inches of each corner, or support components independently.
J. Do not eccentrically load system or induce rotation of runners.

3.3 INSTALLATION - ACOUSTICAL UNITS

A. Install acoustical units in accordance with manufacturer's instructions.
B. Fit acoustical units in place, free from damaged edges or other defects detrimental to appearance and function.
C. Fit border trim neatly against abutting surfaces.
D. Install acoustical units level, in uniform plane, and free from twist, warp, and dents.
E. Cutting Acoustical Units:
   1. Make field cut edges of same profile as factory edges.

3.4 TOLERANCES

A. Maximum Variation from Flat and Level Surface: 1/8 inch in 10 feet.
B. Maximum Variation from Plumb of Grid Members Caused by Eccentric Loads: 2 degrees.

3.5 CLEANING

A. Clean surfaces.
B. Replace damaged or abraded components.

END OF SECTION

SECTION 09 6500 - RESILIENT FLOORING

PART 1 GENERAL

1.1 SECTION INCLUDES

A. Resilient tile flooring.
B. Resilient base.
C. Installation accessories.

1.2 RELATED REQUIREMENTS

A. Section 01 6116 - Volatile Organic Compound (VOC) Content Restrictions.
B. Section 03 3000 - Cast-in-Place Concrete: Restrictions on curing compounds for concrete slabs and floors to receive adhesive-applied resilient flooring.
C. Section 09 0561 - Common Work Results for Flooring Preparation: Concrete slab moisture and alkalinity testing and remediation procedures.

1.3 REFERENCE STANDARDS

A. ASTM E648 - Standard Test Method for Critical Radiant Flux of Floor-Covering Systems Using a Radiant Heat Energy Source.
B. ASTM F710 - Standard Practice for Preparing Concrete Floors to Receive Resilient Flooring.
C. ASTM F1066 - Standard Specification for Vinyl Composition Floor Tile.
D. ASTM F1861 - Standard Specification for Resilient Wall Base.
E. ASTM F2170 - Standard Test Method for Determining Relative Humidity in Concrete Floor Slabs Using in situ Probes.
F. NFPA 253 - Standard Method of Test for Critical Radiant Flux of Floor Covering Systems Using a Radiant Heat Energy Source.

1.4 SUBMITTALS

A. See Section 01 3000 - Administrative Requirements for submittal procedures.
B. Product Data: Provide data on specified products, describing physical and performance characteristics; including sizes, patterns and colors available; and installation instructions.
C. Shop Drawings: Indicate floor patterns.
D. Verification Samples: Submit two samples, full size in size illustrating color and pattern for each resilient flooring product specified.
E. Sustainable Design Submittal: Submit VOC content documentation for flooring and adhesives.
F. Concrete Subfloor Test Report: Submit a copy of the moisture and alkalinity (pH) test reports.
G. Manufacturer's Qualification Statement.
H. Installer's Qualification Statement.
I. Maintenance Data: Include maintenance procedures, recommended maintenance materials, and suggested schedule for cleaning, stripping, and re-waxing.
J. Maintenance Materials: Furnish the following for Owner's use in maintenance of project.
    1. See Section 01 6000 - Product Requirements, for additional provisions.
    2. Extra Flooring Material: LVT-1: 1 box; LVT-2,3,4: 5% of quantity: of each type and color.
    3. Extra Wall Base: MRB-1: 16 linear feet; RB-1: 24 Linear Feet of each type and color.

1.5 QUALITY ASSURANCE

A. Manufacturer Qualifications: Company specializing in manufacturing specified flooring with minimum three years documented experience.
B. Installer Qualifications: Company specializing in installing specified flooring with minimum three years documented experience.

1.6 DELIVERY, STORAGE, AND HANDLING

A. Upon receipt, immediately remove any shrink-wrap and check materials for damage and the correct style, color, quantity and run numbers.

B. Store all materials off of the floor in an acclimatized, weather-tight space.
C. Maintain temperature in storage area between 55 degrees F and 90 degrees F.
D. Protect roll materials from damage by storing on end.
E. Do not double stack pallets.

1.7 FIELD CONDITIONS

A. Store materials for not less than 48 hours prior to installation in area of installation at a temperature of 70 degrees F to achieve temperature stability. Thereafter, maintain conditions above 55 degrees F.

PART 2 PRODUCTS

2.1 LUXURY TILE FLOORING:

A. Luxury Vinyl Tile: Printed film type, with transparent or translucent wear layer; acoustic interlayer or backing.
B. Manufacturers:
   1. Karndean Designflooring; Karndean Van Gogh: www.karndean.com#sle.
   2. Shaw Contract: www.shawcontract; Coded: com#sle..
   3. Substitutions: See Section 01 6000 - Product Requirements.

2.2 PRODUCTS:

A. Product: Karndean; Pattern: Van Gogh
   1. Color: Natural Prime Oak
   2. Size: 7" x 48"
   3. Thickness: 3 mm
   4. VOC Content Limits: As specified in Section 01 6116.
   5. Install: Per manufacturer's recommendation. Refer to Drawings for direction
B. Product: Shaw; Pattern: Coded
   1. Color: Refer to Drawing A800
   2. Size: 6" x 48"
   3. Thickness: 5 mm
   4. VOC Content Limits: As specified in Section 01 6116.
   5. Install: As indicated on drawings.

2.3 RESILIENT BASE

A. Resilient Base: ASTM F1861, Type TS, rubber, vulcanized thermoset; style as scheduled.
   1. Manufacturers:
      a. Johnsonite, a Tarkett Company: www.johnsonite.com/#sle.
      b. Substitutions: See Section 01 6000 - Product Requirements.
   2. Product: Basis of Design
      a. Style: Baseworks Coved
      b. Size: 4" H
      c. Length: 4 foot sections.
      d. Thickness: 0 .125 inch
      e. Finish: Satin
      f. Color: As indicated on drawings
   3. Product: Basis of Design
      a. Style: Millwork Reveal
      b. Size: 4.25 inch
      c. Length: 8 foot sections
      d. Thickness: .25 inch
      e. Finish: Satin
      f. Color: As indicated on drawings

4. Product: Basis of Design
    a. Style: Shoe Moulding
    b. Size: 1.5 inch
    c. Thickness: .25 inch
    d. Length: 8 foot sections
    e. Finish: Satin
    f. Color: As indicated on drawings

2.4 SUBFLOOR FILLER: WHITE PREMIX LATEX; TYPE RECOMMENDED BY ADHESIVE MATERIAL MANUFACTURER.

2.5 PRIMERS, ADHESIVES, AND SEAM SEALER: WATERPROOF; TYPES RECOMMENDED BY FLOORING MANUFACTURER.

A. VOC Content Limits: As specified in Section 01 6116.

2.6 ADHESIVE FOR VINYL FLOORING:

A. Manufacturers:
    1. H.B. Fuller Construction Products, Inc; TEC Flexera 2K PSA Hybrid Adhesive: www.tecspecialty.com/#sle.
    2. H.B. Fuller Construction Products, Inc; TEC Flexera HT - High Tack Premium Universal PSA Adhesive: www.tecspecialty.com/#sle.
    3. Substitutions: Section 01 6000 - Product Requirements.

2.7 MOLDINGS, TRANSITION AND EDGE STRIPS:

A. Manufacturers:
    1. Schluter-Systems: www.schluter.com/#sle.
    2. Johnsonite; www.commercial.tarkett.com/#isle..
    3. Substitutions: See Section 01 6000 - Product Requirements.

B. Products:
    1. Refer to Drawings for specific transitions and trims.

PART 3 EXECUTION

3.1 EXAMINATION

A. Verify that surfaces are flat to tolerances acceptable to flooring manufacturer, free of cracks that might telegraph through flooring, clean, dry, and free of curing compounds, surface hardeners, and other chemicals that might interfere with bonding of flooring to substrate.

B. Cementitious Subfloor Surfaces: Verify that substrates are ready for resilient flooring installation by testing for moisture and alkalinity (pH).
    1. Obtain instructions if test results are not within limits recommended by resilient flooring manufacturer and adhesive materials manufacturer.

3.2 INSTALLATION - GENERAL

A. Starting installation constitutes acceptance of subfloor conditions.

B. Install in accordance with manufacturer's written instructions.

3.3 INSTALLATION - LUXURY VINYL TILE FLOORING

A. Mix tile from container to ensure shade variations are consistent when tile is placed, unless otherwise indicated in manufacturer's installation instructions.

B. Install plank tile with a random offset of at least 6 inches from adjacent rows. Refer to Manufacturer instructions

3.4 INSTALLATION - RESILIENT BASE

A. Fit joints tightly and make vertical. Maintain minimum dimension of 18 inches between joints.

B. Install base on solid backing. Bond tightly to wall and floor surfaces.

3.5 CLEANING

A. Remove excess adhesive from floor, base, and wall surfaces without damage.

B. Clean in accordance with manufacturer's written instructions.

3.6 PROTECTION

A. Prohibit traffic on resilient flooring for 48 hours after installation.

END OF SECTION

SECTION 09 6566 - RESILIENT ATHLETIC FLOORING

PART 1 GENERAL

1.1 SECTION INCLUDES

A. Rubber sheet flooring, adhesively installed.
B. Rubber tile, adhesively installed.

1.2 RELATED REQUIREMENTS

A. Section 01 6116 - Volatile Organic Compound (VOC) Content Restrictions.
B. Section 03 3000 - Cast-in-Place Concrete: Restrictions on curing compounds for concrete slabs and floors to receive adhesive-applied flooring.
C. Section 09 0561 - Common Work Results for Flooring Preparation: Concrete slab moisture and alkalinity testing and remediation procedures.
D. Section 09 6500 - Resilient Flooring.

1.3 REFERENCE STANDARDS

A. ASTM D412 - Standard Test Methods for Vulcanized Rubber and Thermoplastic Elastomers--Tension.
B. ASTM D2240 - Standard Test Method for Rubber Property--Durometer Hardness.
C. ASTM F710 - Standard Practice for Preparing Concrete Floors to Receive Resilient Flooring.
D. ASTM F1869 - Standard Test Method for Measuring Moisture Vapor Emission Rate of Concrete Subfloor Using Anhydrous Calcium Chloride.
E. ASTM F2170 - Standard Test Method for Determining Relative Humidity in Concrete Floor Slabs Using in situ Probes.
F. DIN EN 14904 - Surfaces for Sports Areas – Indoor Surfaces for Multi-Sports Use – Specification.

1.4 ADMINISTRATIVE REQUIREMENTS

1.5 SUBMITTALS

A. See Section 01 3000 - Administrative Requirements, for submittal procedures.
B. Verification Samples: Actual flooring material specified, not less than 12 inch square, mounted on solid backing.
C. Concrete Subfloor Test Report: Submit a copy of the moisture and alkalinity (pH) test reports.
D. Sustainable Design Submittal: Submit VOC content documentation for flooring and adhesives.
E. Manufacturer's Instructions: Indicate standard and special installation procedures.
F. Manufacturer's qualification statement.
G. Installer's qualification statement.
H. Maintenance Materials: Furnish the following for Owner's use in maintenance of project.
    1. See Section 01 6000 - Product Requirements, for additional provisions.
    2. Extra Flooring Material: 10 square yards matching installed flooring.

1.6 QUALITY ASSURANCE

A. Manufacturer Qualifications: Company specializing in manufacturing products specified in this section, with at least three years of documented experience.
B. Installer Qualifications: Company specializing in performing work of the type specified and with at least three years of documented experience.
C. Testing Agency Qualifications: Independent firm specializing in performing testing and inspections of the type specified in this section.

1.7 DELIVERY, STORAGE, AND HANDLING

A. Deliver materials to project site in unopened containers clearly labeled with manufacturer's name and identification of contents.
B. Store materials in dry and clean location until needed for installation. During installation, handle in a manner that will prevent marring and soiling of finished surfaces.

1.8 FIELD CONDITIONS

A. Maintain temperature in spaces to receive adhesively installed resilient flooring within range of 70 to 95 degrees F for not less than 48 hours before the beginning of installation and for not less than 48 hours after installation has been completed. Subsequently, do not allow temperature in installed spaces to drop below 50 degrees F or to go above 100 degrees F.

PART 2 PRODUCTS

2.1 PREFORMED ATHLETIC FLOORING

A. Manufacturers: All products by the same manufacturer.
   1. Regupol (Aktiv) www.sports.regupol.com .
   2. Substitutions: See Section 01 6000 - Product Requirements.

B. Rubber Sheet Flooring: Pur-Bonded SBR (styrene butadiene rubber) and colored EPDM granules with urethane binder, lengths to avoid transverse seams.
   1. VOC Content: As specified in Section 01 6116.
   2. Thickness: Minimum 3/8 inch.
   3. Sheet Width: Minimum 48 inches.
   4. Tensile Strength: Minimum 125 psi, per ASTM D412.
   5. Color: As indicated on drawings.

2.2 ACCESSORIES

A. Leveling Compound: Latex-modified cement formulation as recommended by flooring manufacturer for substrate conditions.

B. Flooring Adhesive: Waterproof; types recommended by flooring manufacturer.

PART 3 EXECUTION

3.1 EXAMINATION

A. Examine substrates for conditions detrimental to installation of athletic flooring. Proceed with installation only after unsatisfactory conditions have been corrected.

B. Verify that surfaces are flat to tolerances acceptable to flooring manufacturer, free of cracks that might telegraph through flooring, clean, dry, and free of curing compounds, surface hardeners, and other chemicals that might interfere with bonding of athletic flooring to substrate.

C. Cementitious Subfloor Surfaces: Verify that substrates are ready for resilient flooring installation by testing for moisture and alkalinity (pH).
   1. Obtain instructions if test results are not within limits recommended by resilient flooring manufacturer and adhesive materials manufacturer.

3.2 PREPARATION

A. Concrete: Use leveling compound as necessary to achieve substrate flatness of plus or minus 1/8 inch within 10 ft radius.

B. Remove coatings that are incompatible with flooring adhesives, using methods recommended by flooring manufacturer.

C. Broom clean areas to receive athletic flooring immediately before beginning installation.

3.3 INSTALLATION

A. Starting installation constitutes acceptance of subfloor conditions.

B. Install in accordance with manufacturer's written instructions.

C. Resilient Sheet Flooring:
   1. Unroll flooring and allow to relax before beginning installation.
   2. Mix adhesive thoroughly and apply to substrate with notched trowel. Roll flooring into fresh adhesive, overlapping end seams and double cutting, butting factory edges and compression fitting.

3. Roll entire flooring surface with steel roller to assure adhesion to substrate and eliminate air bubbles.
4. Immediately remove any adhesive from flooring surface, using chemical recommended by flooring manufacturer.
5. Weld seams using techniques and equipment recommended by manufacturer.
6. Lay out game lines using tape and taping machine approved by flooring manufacturer. Apply game line paint with roller, and allow to dry before removing tape.
7. Apply transparent top coat over flooring if recommended by manufacturer, to achieve a uniform finished appearance.

3.4 CLEANING

A. Clean flooring using methods recommended by manufacturer.

3.5 PROTECTION

A. Protect finished athletic flooring from construction traffic to ensure that it is without damage upon Date of Substantial Completion.

END OF SECTION

SECTION 09 6700 - FLUID-APPLIED FLOORING

PART 1 GENERAL

1.1 SECTION INCLUDES

A. Fluid-applied flooring and base.

1.2 RELATED REQUIREMENTS

A. Section 01 6116 - Volatile Organic Compound (VOC) Content Restrictions.
B. Section 07 9200 - Joint Sealants: Sealing joints between fluid-applied flooring and adjacent construction and fixtures.
C. Section 09 0561 - Common Work Results for Flooring Preparation: Concrete slab moisture and alkalinity testing and remediation procedures.
D. Section 22 1006 - Plumbing Piping Specialties: Recessed plumbing access cover frames.

1.3 REFERENCE STANDARDS

A. ANSI/ESD STM7.1 - The Protection of Electrostatic Discharge Susceptible Items Flooring Systems Resistive Characterization.
B. ASTM F710 - Standard Practice for Preparing Concrete Floors to Receive Resilient Flooring.
C. ASTM F1869 - Standard Test Method for Measuring Moisture Vapor Emission Rate of Concrete Subfloor Using Anhydrous Calcium Chloride.
D. ASTM F2170 - Standard Test Method for Determining Relative Humidity in Concrete Floor Slabs Using in situ Probes.
E. ICRI 310.2R - Selecting and Specifying Concrete Surface Preparation.

1.4 SUBMITTALS

A. See Section 01 3000 - Administrative Requirements for submittal procedures.
B. Product Data: Provide data on specified products, describing physical and performance characteristics;
C. Samples: Submit two samples, by 6 x 6 inch in size illustrating color and pattern for each floor material for each color specified.
D. Concrete Subfloor Test Report: Submit a copy of the moisture and alkalinity (pH) test reports.
E. Manufacturer's Installation Instructions: Indicate special procedures, perimeter conditions requiring special attention, and application rate for each coat.
F. Manufacturer's Qualification Statement.
G. Applicator's Qualification Statement.
H. Maintenance Data: Include maintenance procedures, recommended maintenance materials, procedures for stain removal, repairing surface, and suggested schedule for cleaning.
I. Maintenance Materials: Furnish the following for Owner's use in maintenance of project.
    1. See Section 01 6000 - Product Requirements, for additional provisions.
    2. Extra Top Coat Materials: 2 gallons.

1.5 QUALITY ASSURANCE

A. Manufacturer Qualifications: Company specializing in manufacturing products specified in this section with minimum three years documented experience.
B. Applicator Qualifications: Company specializing in performing the work of this section.
    1. Minimum 3 years of experience.
    2. Professionally trained by manufacturer.

1.6 MOCK-UPS

A. See Section 01 4000 - Quality Requirements for additional requirements.
B. Construct mock-up(s) of fluid applied flooring to serve as basis for evaluation of texture and workmanship.
    1. Number of Mock-Ups to be Prepared: One.
    2. Use same materials and methods for use in the work.

3. Use approved design samples as basis for mock-ups.
4. Locate where directed.
5. Minimum Size: 48 inches by 48 inches.

C. See Section 01 4000 - Quality Requirements for additional requirements.
D. Obtain approval of mock-up by Architect before proceeding with work.
E. Approved mock-up may remain as part of the work.

1.7 DELIVERY, STORAGE, AND HANDLING

A. Store resin materials in a dry, secure area.
B. Store materials for three days prior to installation in area of installation to achieve temperature stability.

1.8 FIELD CONDITIONS

A. Maintain minimum temperature in storage area of 55 degrees F.
B. Store materials in area of installation for minimum period of 24 hours prior to installation.
C. Maintain ambient temperature required by manufacturer 72 hours prior to, during, and 24 hours after installation of materials.

PART 2 PRODUCTS

2.1 MANUFACTURERS

A. Fluid-Applied Flooring:
1. Sherwin-Williams High-Performance Flooring: www.sherwin-williams.com/resin-flooring/#sle.
2. Sika Corporation: www.sikafloorusa.com/#sle.
3. Substitutions: See Section 01 6000 - Product Requirements.

2.2 INSTALLERS

A. Fluid-Applied Flooring:
1. ECS - Epoxy Coating Specialist. Kansas City, MO. Dave Schloegel, (913) 558-4098.
2. US Flooring. Joplin, MO. Juston Mitchell, (417) 529-3566.
3. Eagle Grip Coatings. Conway, AR. Troy Hudson, (501) 960-4440.
4. Substitutions: See Section 01 6000 - Product Requirements.

2.3 FLUID-APPLIED FLOORING SYSTEMS

A. Fluid-Applied Flooring: Epoxy base coat(s), with broadcast aggregate.
1. Aggregate: Vinyl flakes.
2. Primer: Sikafloor 161
3. Base Coat: Sikafloor 264
4. Top Coat: Sikafloor 217
5. System Thickness: 1/8 inch, nominal, dry film thickness (DFT).
6. Texture: Orange peel.
7. Sheen: High gloss.
8. Color: Refer to Drawings.
9. Basis of Design Product: Sika DecoDur Flake FX: www.usa.sika.com/#sle.
10. Products:
    a. Sherwin-Williams High-Performance Flooring; Resuflor Deco Flake BC: www.sherwin-williams.com/resin-flooring/#sle.
    b. Substitutions: See Section 01 6000 - Product Requirements.

2.4 ACCESSORIES

A. Subfloor Filler: Type recommended by fluid-applied flooring manufacturer.
B. Primer: Type recommended by fluid-applied flooring manufacturer.

PART 3 EXECUTION

3.1 EXAMINATION

A. Verify that subfloor surfaces are smooth and flat within the tolerances specified for that type of work and are ready to receive flooring.
B. Verify that subfloor surfaces are dust-free and free of substances that could impair bonding of materials to subfloor surfaces.
C. Cementitious Subfloor Surfaces: Verify that substrates are ready for fluid-applied flooring installation by testing for moisture and alkalinity (pH).
   1. Test as Follows:
      a. Alkalinity (pH): ASTM F710.
      b. Internal Relative Humidity: ASTM F2170.
      c. Moisture Vapor Emission: ASTM F1869.
   2. Obtain instructions if test results are not within limits recommended by fluid-applied flooring manufacturer.
   3. Follow moisture and alkalinity remediation procedures in Section 09 0561.
D. Verify that required floor-mounted utilities are in correct location.

3.2 PREPARATION

A. Remove subfloor ridges and bumps. Fill low spots, cracks, joints, holes, and other defects with subfloor filler.
B. Apply, trowel, and float filler to achieve smooth, flat, hard surface. Grind irregularities above the surface level. Prohibit traffic until filler is cured.
C. Vacuum clean substrate.
D. Apply primer to surfaces required by flooring manufacturer.

3.3 INSTALLATION - ACCESSORIES

A. Install terminating cap strip at top of base; attach securely to wall substrate.

3.4 INSTALLATION - FLOORING

A. Apply in accordance with manufacturer's instructions.
B. Apply each coat to minimum thickness required by manufacturer.
C. Finish to level surface.
D. Cove at vertical surfaces.

3.5 FIELD QUALITY CONTROL

A. See Section 01 4000 - Quality Requirements, for additional requirements.
B. Test installed floor surface in accordance with ANSI/ESD STM7.1 .

3.6 PROTECTION

A. Prohibit traffic on floor finish for 48 hours after installation.
B. Barricade area to protect flooring until fully cured.

END OF SECTION

SECTION 09 6813 - TILE CARPETING

PART 1 GENERAL

1.1 SECTION INCLUDES

A. Carpet tile, fully adhered.

1.2 RELATED REQUIREMENTS

A. Section 01 6116 - Volatile Organic Compound (VOC) Content Restrictions.
B. Section 01 7419 - Construction Waste Management and Disposal: Reclamation/Recycling of new carpet tile scrap.
C. Section 03 3000 - Cast-in-Place Concrete: Restrictions on curing compounds for concrete slabs and floors to receive adhesive-applied flooring.
D. Section 09 0561 - Common Work Results for Flooring Preparation: Concrete slab moisture and alkalinity testing and remediation procedures.

1.3 PRICE AND PAYMENT PROCEDURES

1.4 REFERENCE STANDARDS

A. ASTM D2859 - Standard Test Method for Ignition Characteristics of Finished Textile Floor Covering Materials.
B. ASTM F710 - Standard Practice for Preparing Concrete Floors to Receive Resilient Flooring.
C. ASTM F1869 - Standard Test Method for Measuring Moisture Vapor Emission Rate of Concrete Subfloor Using Anhydrous Calcium Chloride.
D. ASTM F2170 - Standard Test Method for Determining Relative Humidity in Concrete Floor Slabs Using in situ Probes.
E. CRI 104 - Standard for Installation of Commercial Carpet.
F. CRI (GLP) - Green Label Plus Testing Program - Certified Products.
G. NFPA 253 - Standard Method of Test for Critical Radiant Flux of Floor Covering Systems Using a Radiant Heat Energy Source.

1.5 SUBMITTALS

A. See Section 01 3000 - Administrative Requirements, for submittal procedures.
B. Product Data: Provide data on specified products, describing physical and performance characteristics; sizes, patterns, colors available, and method of installation.
C. Shop Drawings: Indicate direction of carpet.
D. Samples: Submit two carpet tiles illustrating color and pattern design for each carpet color selected.
E. Accessory Samples: Submit two 4 inch long samples of transitions.
F. Manufacturer's Installation Instructions: Indicate special procedures.
G. Concrete Subfloor Test Report: Submit a copy of the moisture and alkalinity (pH) test reports.
H. Installer's Qualification Statement.
I. Operation and Maintenance Data: Include maintenance procedures, recommended maintenance materials, and suggested schedule for cleaning.
J. Maintenance Materials: Furnish the following for Owner's use in maintenance of project.
    1. See Section 01 6000 - Product Requirements, for additional provisions.
    2. Extra Carpet Tiles: Quantity equal to 5 percent of total installed of each color and pattern installed.

1.6 QUALITY ASSURANCE

A. Manufacturer Qualifications: Company specializing in manufacturing specified carpet tile with minimum three years documented experience.
B. Installer Qualifications: Company specializing in installing carpet tile with minimum three years documented experience and approved by carpet tile manufacturer.

1.7 FIELD CONDITIONS

A. Store materials in area of installation for minimum period of 24 hours prior to installation.

PART 2 PRODUCTS

2.1 MANUFACTURERS

A. Tile Carpeting:
   1. Milliken & Company: www.milliken.com/#sle.
   2. Bentley Mills: www.bentleymills.com#sle..
   3. Substitutions: See Section 01 6000 - Product Requirements.

2.2 MATERIALS

A. Tile Carpeting, Type CPT-1: Tufted, Textured Loop and Cut Pile, manufactured in one color dye lot.
   1. Product: Milliken Floors.
   2. Tile Size: 25 cm X 1 , (9.84" X 39.4"), nominal.
   3. Thickness: 2.84 mm (0.112") inch.
   4. Color: Gather.
   5. Pattern: Enlighten.
   6. VOC Content: Comply with Section 01 6116.
   7. Indoor Air Quality: CRI (GLP) Green Label Plus
   8. Gauge: 1/12 inch.
   9. Stitches: 9.5 per inch.
   10. Yarn Type: Milliken-Certified WearOn Nylon denier.
   11. Density Factor: 5300 Finished.
   12. Primary Backing Material: PVC Free WellBACK Comfort Cushion.
   13. Total Weight: 96.9 oz/yd.
   14. Dye Method: PrintWorks Precision Dyeing.
   15. Stain Resist/Soil Release: StainSmart.
   16. Install: Ashlar Half Drop - Refer to Drawings for direction.

B. Tile Carpeting, Type WOC-1: Tufted, Tip Sheared, manufactured in one color dye lot.
   1. Product: Bentley Mills.
   2. Tile Size: 24" x 24", nominal.
   3. Thickness: 6.6 mm (0.260") inch.
   4. Color: Outline.
   5. Pattern: Rough Idea Shear.
   6. VOC Content: Comply with Section 01 6116.
   7. Indoor Air Quality: CRI (GLP) Green Label Plus
   8. Gauge: 5/64 inch.
   9. Stitches: 6.3 per inch.
   10. Yarn Weight: 24 oz/sq yd.
   11. Light Fastness: AATCC 16E.
   12. Primary Backing Material: AFFIRMA II Hardback.
   13. Dye Method: Solution Dyed.
   14. Install: Ashlar Pattern.
   15. Total Weight: 65 oz/yd.

2.3 ACCESSORIES

A. Subfloor Filler: White premix latex; type recommended by flooring material manufacturer.
B. Edge Strips: Refer to A800 for Transition Strips, color as selected by Architect.
C. Adhesives:
   1. Compatible with materials being adhered; maximum VOC content as specified in Section 01 6116.

D. Carpet Tile Adhesive: Recommended by carpet tile manufacturer.

PART 3 EXECUTION

3.1 EXAMINATION

A. Verify that subfloor surfaces are smooth and flat within tolerances specified for that type of work and are ready to receive carpet tile.
B. Verify that wall surfaces are smooth and flat within the tolerances specified for that type of work, are dust-free, and are ready to receive carpet tile.
C. Verify that subfloor surfaces are dust-free and free of substances that could impair bonding of adhesive materials to subfloor surfaces.
D. Cementitious Subfloor Surfaces: Verify that substrates are ready for flooring installation by testing for moisture and alkalinity (pH).
   1. Obtain instructions if test results are not within limits recommended by flooring material manufacturer and adhesive materials manufacturer.
   2. Follow moisture and alkalinity remediation procedures in Section 09 0561.
E. Verify that required floor-mounted utilities are in correct location.

3.2 INSTALLATION

A. Starting installation constitutes acceptance of subfloor conditions.
B. Install carpet tile in accordance with manufacturer's instructions.
C. Blend carpet from different cartons to ensure minimal variation in color match.
D. Cut carpet tile clean. Fit carpet tight to intersection with vertical surfaces without gaps.
E. Lay carpet tile in square pattern, with pile direction parallel to next unit, set parallel to building lines.
F. Trim carpet tile neatly at walls and around interruptions.
G. Complete installation of edge strips, concealing exposed edges.

3.3 CLEANING

A. Remove excess adhesive without damage, from floor, base, and wall surfaces.
B. Clean and vacuum carpet surfaces.

END OF SECTION

SECTION 09 9000 - PAINTING AND COATING - COMMERCIAL FACILITY GUIDE SPECIFICATION - SHERWIN-WILLIAMS

PART 1 GENERAL

1.1 SECTION INCLUDES

A. Surface preparation.
B. Interior painting and coating systems.
C. Scope:
  1. Finish surfaces exposed to view, unless fully factory-finished and unless otherwise indicated, including the following:
    a. Interior:
      1) Masonry CMU: Concrete, split face, scored, smooth, high density, low density, and fluted.
      2) Metal: Aluminum and galvanized.
      3) Metal, Galvanized: Ceilings and ductwork.
      4) Metal: Structural steel columns, joists, trusses, beams, miscellaneous and ornamental iron, structural iron, and ferrous metal.
      5) Drywall: Walls, ceilings, gypsum board, and similar items.
      6) Concrete: Floors, non-vehicular.

1.2 RELATED REQUIREMENTS

A. Section 01 6116 - Volatile Organic Compound (VOC) Content Restrictions.
B. Section 05 5000 - Metal Fabrications: Shop-primed items.
C. Section 07 8123 - Intumescent Fire Protection.

1.3 REFERENCE STANDARDS

A. 40 CFR 59, Subpart D - National Volatile Organic Compound Emission Standards for Architectural Coatings; U.S. Environmental Protection Agency.
B. SSPC-SP 1 - Solvent Cleaning.
C. SSPC-SP 2 - Hand Tool Cleaning.
D. SSPC-SP 13/NACE No.6 - Surface Preparation of Concrete.

1.4 SUBMITTALS

A. See Section 01 3000 - Administrative Requirements for submittal procedures.
B. Product Data: Provide complete list of products to be used, with the following information for each:
  1. Product characteristics.
  2. Surface preparation instructions and recommendations.
  3. Primer requirements and finish specification.
  4. Storage and handling requirements and recommendations.
  5. Application methods.
  6. Clean-up information.
C. Samples: Submit four paper draw down samples, 8-1/2 by 11 inches in size, illustrating range of colors available for each finishing product specified.
D. Certification: By manufacturer that paints and finishes comply with VOC limits specified.
E. Applicator's qualification statement.
F. Maintenance Data: Submit coating maintenance manual including finish schedule showing where each product/color/finish was used, product technical data sheets, safety data sheets (SDS), care and

cleaning instructions, touch-up procedures, repair of painted and finished surfaces, and color samples of each color and finish used.

G. Maintenance Materials: Furnish the following for Owner's use in maintenance of project.
   1. See Section 01 6000 - Product Requirements for additional provisions.
   2. Extra Paint and Finish Materials: 1 gallon of each color; from the same product run, store where directed.
   3. Label each container with color in addition to manufacturer's label.

1.5 QUALITY ASSURANCE

A. Applicator Qualifications: Company specializing in performing the type of work specified with minimum 3 years experience and approved by manufacturer.

1.6 DELIVERY, STORAGE, AND HANDLING

A. Deliver products to site in sealed and labeled containers; inspect to verify acceptability.

B. Container Label: Include manufacturer's name, type of paint, product name, product code, color designation, VOC content, batch date, environmental handling, surface preparation, application, and use instructions.

C. Paint Materials: Store at a minimum of 45 degrees F and a maximum of 90 degrees F, in ventilated area, and as required by manufacturer's instructions.

1.7 FIELD CONDITIONS

A. Do not apply materials when environmental conditions are outside the ranges required by manufacturer.

B. Follow manufacturer's recommended procedures for producing the best results, including testing of substrates, moisture in substrates, and humidity and temperature limitations.

PART 2 PRODUCTS

2.1 MANUFACTURERS

A. Basis of Design Products: Subject to compliance with requirements, provide Sherwin-Williams Company (The) products indicated; www.sherwin-williams.com/#sle.

B. Comparable Products: Products of approved manufacturers will be considered in accordance with 01 6000 - Product Requirements, and the following:
   1. Products are approved by manufacturer in writing for application specified.
   2. Products that meet or exceed performance and physical characteristics of basis of design products.
   3. Other Acceptable Manufacturers:
      a. Pittsburgh Paints; www.ppgpaints.com.

2.2 PAINTINGS AND COATINGS

A. General:
   1. Provide factory-mixed coatings unless otherwise indicated.
   2. Do not reduce, thin, or dilute coatings or add materials to coatings unless specifically indicated in manufacturer's instructions.

B. Volatile Organic Compound (VOC) Content: Comply with Section 01 6116.

C. Accessory Materials: Provide primers, sealers, cleaning agents, cleaning cloths, sanding materials, and clean-up materials as required for final completion of painted surfaces.

2.3 PAINT SYSTEMS - INTERIOR

A. Masonry CMU: Concrete, scored, smooth, high density, low density, and fluted.

1. Latex Systems:
    a. Eg-Shel/Satin Finish:
        1) 1st Coat: Sherwin-Williams PrepRite Block Filler, B25W25: www.sherwin-williams.com/#sle.
        2) 2nd and 3rd Coat: Sherwin-Williams ProMar 200 Zero VOC Eg-Shel, B20-2600 Series: www.sherwin-williams.com/#sle.
            (a) 4 mils wet, 1.7 mils dry per coat.
2. Epoxy Systems, Water Based: (Shower Walls)
    a. Semi-Gloss Finish:
        1) 1st Coat: Sherwin-Williams Epoxy Block Filler/Epoxy Intermediate Coat/Epoxy or Polysiloxane Finish Coat (Wet Areas- Direct Water Contact ,
            (a) Prime Coat (bare CMU area only) B42W400 Kem Cati-Coat HS Epoxy Filler
            (b) Intermediate Coat: B58W610 Marcropoxy 646 Fast Cure Epoxy
        2) Finish Coat: B80W501 Sher-Loxane 800 Two Component Polysiloxane (for white colors)
            (a) 50 to 100 sq ft/gal.

B. Metal, Galvanized: Ceilings and ductwork.
1. Dryfall Waterborne Topcoats:
    a. Semi-Gloss Finish:
        1) 1st and 2nd Coat: Sherwin-Williams Pro Industrial Waterborne Acrylic Dryfall, B42-83 Series: www.sherwin-williams.com/#sle.

C. Metal: Structural steel columns, joists, trusses, beams, miscellaneous and ornamental iron, structural iron, and ferrous metal.
1. Dryfall Waterborne Topcoat:
    a. Semi-Gloss Finish:
        1) 1st Coat: Sherwin-Williams Pro Industrial Pro-Cryl Universal Primer, B66-1310 Series: www.sherwin-williams.com/#sle.
            (a) 5 mils wet, 2 mils dry per coat.
        2) 2nd and 3rd Coat: Sherwin-Williams Pro Industrial Waterborne Acrylic Dryfall, B42-83 Series: www.sherwin-williams.com/#sle.
            (a) 5.8 mils wet, 2.3 mils dry per coat.

D. Drywall: Walls, ceilings, gypsum board, and similar items.
1. Latex Systems:
    a. Eg-Shel Finish High Performance (HP): (Walls)
        1) 1st Coat: Sherwin-Williams ProMar 200 Zero VOC Interior Latex Primer, B28W2600: www.sherwin-williams.com/#sle.
            (a) 4 mils wet, 1.5 mils dry per coat.
        2) 2nd and 3rd Coat: Sherwin-Williams ProMar 200 HP Zero VOC Eg-Shel, B20-1950 Series: www.sherwin-williams.com/#sle.
            (a) 4 mils wet, 1.7 mils dry per coat.
    b. Flat Finish: (Ceilings)
        1) 1st Coat: Sherwin-Williams ProMar 200 Zero VOC Interior Latex Primer, B28W2600: www.sherwin-williams.com/#sle.
            (a) 4 mils wet, 1.5 mils dry per coat.
        2) 2nd and 3rd Coat: Sherwin-Williams ProMar 200 Zero VOC Latex Flat, B30-2600 Series: www.sherwin-williams.com/#sle.

(a) 4 mils wet, 1.6 mils dry per coat.

2. Epoxy Systems, Water Based: (Shower Ceilings)
   a. Eg-Shel/Low Luster Finish:
      1) 1st Coat: Sherwin-Williams ProMar 200 Zero VOC Interior Latex Primer, B28W2600: www.sherwin-williams.com/#sle.
      2) 2nd and 3rd Coat: Sherwin-Williams K45W2151 Pro Industrial Water Based Catalyzed Epoxy, B73-360 Series: www.sherwin-williams.com/#sle.
         (a) 5 mils wet, 2 mils dry per coat.

PART 3 EXECUTION

3.1 EXAMINATION

A. Verify that surfaces are ready to receive work as instructed by the product manufacturer.
B. Examine surfaces scheduled to be finished prior to commencement of work. Report any condition that may potentially effect proper application.
C. Test shop-applied primer for compatibility with subsequent cover materials.

3.2 PREPARATION

A. Clean surfaces thoroughly and correct defects prior to application.
B. Prepare surfaces using the methods recommended by the manufacturer for achieving the best result for the substrate under the project conditions.
C. Masonry: Remove efflorescence and chalk.
D. Cementitious Siding: Remove dirt, dust and other foreign matter. Pressure clean, if needed, to remove grease, oil, and loose particles.
E. Gypsum Board: Fill minor defects with filler compound; sand smooth and remove dust prior to painting.
F. Aluminum: Remove surface contamination and oil; wash with solvent according to SSPC-SP 1.
G. Galvanized Surfaces:
   1. Remove surface contamination and oils and wash with solvent according to SSPC-SP 1.
   2. Prepare surface according to SSPC-SP 2.

3.3 APPLICATION

A. Remove unfinished louvers, grilles, covers, and access panels on mechanical and electrical components and paint separately.
B. Apply products in accordance with manufacturer's written instructions.
C. Apply coatings at spread rate required to achieve manufacturer's recommended dry film thickness.

3.4 PRIMING

A. Apply primer to all surfaces unless specifically not required by coating manufacturer. Apply in accordance with coating manufacturer's instructions.
B. Primers specified in painting schedules may be omitted on items that are factory primed or factory finished if acceptable to top coat manufacturers.

3.5 CLEANING

A. Collect waste material that could constitute a fire hazard, place in closed metal containers, and remove daily from site.
B. Clean surfaces immediately of overspray, splatter, and excess material.
C. After coating has cured, clean and replace finish hardware, fixtures, and fittings previously removed.

3.6 PROTECTION

A. Protect finished coatings from damage until completion of project.
B. Touch-up damaged finishes after Substantial Completion.

END OF SECTION

SECTION 09 9300 - STAINING AND TRANSPARENT FINISHING

PART 1 GENERAL

1.1 SECTION INCLUDES

A. Field application of stains.
B. Field application of transparent finishes.

1.2 RELATED REQUIREMENTS

A. Section 01 6116 - Volatile Organic Compound (VOC) Content Restrictions.

1.3 REFERENCE STANDARDS

A. 40 CFR 59, Subpart D - National Volatile Organic Compound Emission Standards for Architectural Coatings; U.S. Environmental Protection Agency.
B. MPI (APSM) - Master Painters Institute Architectural Painting Specification Manual.
C. SCAQMD 1113 - South Coast Air Quality Management District Rule No.1113.

1.4 SUBMITTALS

A. See Section 01 3000 - Administrative Requirements for submittal procedures.
B. Product Data: Provide complete list of products to be used, with the following information for each:
   1. Manufacturer's name, product name and catalog number, and general product category.
   2. Manufacturer's installation instructions.
C. Samples: Two samples on actual wood substrate to be finished, 4 by 4 inch in size, indicating selected colors and sheens for each system, with specified coats cascaded.
D. Maintenance Data: Submit data including finish schedule showing where each product, color, and finish was used, product technical data sheets, safety data sheets (SDS), care and cleaning instructions, touch-up procedures, and color samples of each color and finish used.

1.5 FIELD CONDITIONS

A. Do not apply materials when surface and ambient temperatures are outside the temperature ranges required by manufacturer of stains and transparent finishes.
B. Follow manufacturer's recommended procedures for producing best results, including testing of substrates, moisture in substrates, and humidity and temperature limitations.
C. Do not apply materials when relative humidity exceeds 85 percent, at temperatures less than 5 degrees F above the dew point, or to damp or wet surfaces.

PART 2 PRODUCTS

2.1 STAINS AND TRANSPARENT FINISHES - GENERAL

A. Finishes:
   1. Provide finishes capable of being readily and uniformly dispersed to a homogeneous coating, with good flow and brushing properties, and capable of drying or curing free of streaks or sags.
   2. Provide materials compatible with one another and the substrates indicated under conditions of service and application, as demonstrated by manufacturer based on testing and field experience.
   3. Supply each finish material in quantity required to complete entire project's work from a single production run.
   4. Do not reduce, thin, or dilute finishes or add materials unless such procedure is specifically described in manufacturer's product instructions.
B. Volatile Organic Compound (VOC) Content: See Section 01 6116.
C. Sheens: Provide the sheens specified; where sheen is not specified, sheen will be selected later by Architect from the manufacturer's full line.
D. Colors: As indicated in Color Schedule.

2.2 INTERIOR STAIN AND TRANSPARENT FINISH SYSTEMS

A. Finish on Wood - Doors:
   1. two-coat stain.
   2. One-coat varnish.
   3. Stain: Semi-transparent stain for wood, water based with polyurethane.
      a. Products:
         1) Behr Water-Based Wood Stain and Poly in One, Gloss [B6300].
         2) Substitutions: Section 01 6000 - Product Requirements.
   4. Top Coat: Clear water-based varnish; MPI #128, 129, or 130.
      a. Products:
         1) Behr Fast Drying Water-Based Polyurethane [B8100].
         2) Substitutions: Section 01 6000 - Product Requirements.
   5. Top Coat Sheen:
      a. Semi-Gloss: MPI gloss level 5; use this sheen at all locations.

2.3 ACCESSORY MATERIALS

A. Accessory Materials: Cleaning agents, cleaning cloths, sanding materials, and clean-up materials as required for final completion of finished surfaces.

PART 3 EXECUTION

3.1 EXAMINATION

A. Do not begin application of stains and finishes until substrates have been properly prepared.
B. Verify that surfaces are ready to receive work as instructed by the product manufacturer.
C. Examine surfaces scheduled to be finished prior to commencement of work. Report any condition that may potentially effect proper application.
D. If substrate preparation is the responsibility of another installer, notify Architect of unsatisfactory preparation before proceeding.

3.2 PREPARATION

A. Clean surfaces thoroughly and correct defects prior to application.
B. Prepare surfaces using the methods recommended by the manufacturer for achieving the best result for the substrate under the project conditions.
C. Remove surface appurtenances, including electrical plates, hardware, light fixture trim, escutcheons, and fittings, prior to preparing surfaces or finishing.
D. Seal surfaces that might cause bleed through or staining of topcoat.
E. Wood Surfaces to Receive Transparent Finish: Wipe off dust and grit prior to sealing, seal knots, pitch streaks, and sappy sections with sealer. Fill nail holes and cracks after sealer has dried; sand lightly between coats. Prime concealed surfaces with gloss varnish reduced 25 percent with thinner.
F. Wood Doors to be Field-Finished: Seal wood door top and bottom edge surfaces with clear sealer.

3.3 APPLICATION

A. Apply products in accordance with manufacturer's written instructions and recommendations in "MPI Architectural Painting Specification Manual".
B. Do not apply finishes to surfaces that are not dry. Allow applied coats to dry before next coat is applied.
C. Apply each coat to uniform appearance in thicknesses specified by manufacturer.
D. Wood to Receive Transparent Finishes: Tint fillers to match wood. Work fillers into the grain before set. Wipe excess from surface.
E. Reinstall items removed prior to finishing.

3.4 CLEANING

A. Collect waste material that could constitute a fire hazard, place in closed metal containers, and remove daily from site.

3.5 PROTECTION

A. Protect finishes until completion of project.

B. Touch-up damaged finishes after Substantial Completion.

END OF SECTION

SECTION 10 1100 - VISUAL DISPLAY UNITS

PART 1 GENERAL

1.1 SECTION INCLUDES

A. Glass markerboards.

1.2 RELATED REQUIREMENTS

A. Section 06 1000 - Rough Carpentry: Blocking and supports.

1.3 SUBMITTALS

A. See Section 01 3000 - Administrative Requirements, for submittal procedures.
B. Shop Drawings: Indicate wall elevations, dimension, special anchoring.
C. Samples: Two, 2 by 2 inches in size illustrating materials and finish, color and texture of glass markerboard.

1.4 QUALITY ASSURANCE

A. Manufacturer Qualifications: Company specializing in manufacturing the products specified in this section with minimum three years documented experience.

1.5 WARRANTY

A. See Section 01 7800 - Closeout Submittals, for additional warranty requirements.
B. Provide five year warranty for markerboard to include warranty against discoloration due to cleaning, crazing or cracking, and staining.

PART 2 PRODUCTS

2.1 VISUAL DISPLAY UNITS

A. Magnetic Glass Markerboards:
   1. Manufacturers:
      a. Claridge Products and Equipment, Inc: www.claridgeproducts.com/#sle.
      b. Deko Premier Markerboards:www.dekomarkerboards.com/#sle..com.
      c. Substitutions: See Section 01 6000 - Product Requirements.
   2. Glass: Laminated, low iron, 1/4 inch thick, with bevel edges and radiused corners, laminated to steel backing sheet for use with magnets. Coated or treated for use as dry erase board.
   3. Glass Finish: White back-coating.
   4. Steel Backing Sheet Thickness: 24 gauge, 0.0239 inch .
   5. Size: As indicated on drawings.
   6. Frame: No frame, with concealed fasteners.
   7. Mounting: Concealed.
   8. Accessories: Provide magnetic marker tray, magnetic marker holder, and magnetic eraser.

2.2 MATERIALS

A. Float Glass: Provide float-glass-based glazing unless otherwise indicated.

2.3 ACCESSORIES

A. Temporary Protective Cover: Sheet polyethylene, 8 mil thick.
B. Marker Tray: Aluminum, manufacturer's standard profile, one piece full length of markerboard, molded ends, concealed fasteners, same finish as frame.
C. Mounting Brackets: Concealed.

PART 3 EXECUTION

3.1 EXAMINATION

A. Verify that field measurements are as indicated.

B. Verify that internal wall blocking is ready to receive work and positioning dimensions are as indicated on shop drawings.

3.2 PREPARATION

A. Acclimatize tackable wall panels by removing from packaging in installation area not less than 24 hours before application.

B. Prepare surfaces using the methods recommended by the manufacturer for achieving the best result for the substrate under the project conditions.

3.3 INSTALLATION

A. Install boards in accordance with manufacturer's instructions.

B. Install with top of marker tray at 30 inches above finished floor.

C. Secure units level and plumb.

3.4 CLEANING

A. Clean board surfaces in accordance with manufacturer's instructions.

B. Cover with protective cover, taped to frame.

C. Remove temporary protective cover at Date of Substantial Completion.

END OF SECTION

SECTION 10 1419 - SIGNAGE

PART 1 GENERAL

1.1 SECTION INCLUDES

A. Dimensional letter signage.
B. Illumination system.
C. Panel Signage.

1.2 REFERENCE STANDARDS

A. 36 CFR 1191 - Americans with Disabilities Act (ADA) Accessibility Guidelines for Buildings and Facilities; Architectural Barriers Act (ABA) Accessibility Guidelines.
B. ADA Standards - Americans with Disabilities Act (ADA) Standards for Accessible Design.
C. ICC A117.1 - Accessible and Usable Buildings and Facilities.
D. NFPA 70 - National Electrical Code.
E. UL 879 - Electric Sign Components.

1.3 SUBMITTALS

A. See Section 01 3000 - Administrative Requirements for submittal procedures.
B. Product Data: Manufacturer's product literature for each type of sign, indicating style, font, colors, locations, materials, and overall dimensions of each sign.
C. Shop Drawings:
   1. Include dimensions, locations, elevations, materials, text and graphic layout, attachment details, and mounting heights, and fonts, if applicable.
   2. Show locations of electrical service connections.
   3. Include diagrams for power, signal, and control wiring.
   4. Schedule: Provide information sufficient to completely define each sign for fabrication, including room number or location, room name, other text to be applied, sign and letter sizes, fonts, and colors.
      a. When room numbers on signs differ from those on drawings, include the drawing room number on the schedule.
      b. When content of signs is indicated to be determined later, request such information from Owner through the Architect at least 2 months prior to start of fabrication; upon request, submit preliminary schedule.
      c. Submit for approval by Owner through the Architect prior to fabrication.
D. Selection Samples: Where materials, colors, and finishes are not specified, submit two sets of selection charts or chips.
E. Shop drawings must be approved by Architect prior to sign fabrication.
F. Manufacturer's qualification statement.

1.4 QUALITY ASSURANCE

A. Manufacturer Qualifications: Company specializing in manufacturing the products specified in this section with minimum three years of documented experience.

1.5 DELIVERY, STORAGE, AND HANDLING

A. Package dimensional letter signs as required to prevent damage before installation.
B. Store under cover and elevated above grade.
C. Store tape adhesive at a normal room temperature of 68 to 72 degrees F.

1.6 FIELD CONDITIONS

A. Do not install tape adhesive when ambient temperature is lower than recommended by manufacturer.
B. Maintain minimum ambient temperature during and after installation.

PART 2 PRODUCTS

2.1 SCHEDULE

A. Type S01 - Front Desk Hours and After Hours.
   1. Location: Door 100a.
   2. Type: Colored Vinyl on Glass door.
   3. Color: White letters. Colored shield and arrow components.
   4. Components:
      a. Line 1: "Front Desk Operating Hours".
      b. Line 2: "Monday - Friday 8:30 AM - 5 PM".
      c. Line 3: "Operating Hours Subject To Change in Emergency Situations".
      d. Line 4: "For After Hours assistance, use the red".
      e. Line 5: "phone to the left or call: 582-1030".
         1) Verify phone number with Owner prior to sign fabrication.
      f. Line 6: Red arrow pointing to the left.
      g. Line 7: Nixa Police 'shield' logo. Approximately 8" in height.
   5. Font: Sans Serif. Arial, Helvetica, or similar.
   6. Overall Signage Dimensions: 1'-10" wide, maximum. Height, as required. Center text on one axis. Centered in door light.

B. Type S02 - Push Button for Police Assistance.
   1. Location: Vestibule 100. On glass adjacent to push button.
   2. Type: Colored Vinyl on Glass.
   3. Color: White letters. Red arrow.
   4. Components:
      a. Text: "Emergency Push Button for 911 Dispatch Center. This is Not a Doorbell".
      b. Red Arrow pointing toward push button. Arrow to be centered under text.
   5. Font: Sans Serif. Arial, Helvetica, or similar.
   6. Overall Signage Dimensions: 10" wide by 8" high, maximum.

C. Type S03 - Police Assistance Phone.
   1. Location: Public Lobby 101, Southeast corner. Secure Lobby 106, Northeast corner. Centered above emergency phones.
   2. Type: Panel Sign.
   3. Color: White sign with Black Letters.
   4. Components:
      a. Text: "Police Assistance Phone".
   5. Font: Sans Serif. Arial, Helvetica, or similar.
   6. Overall Signage Dimensions: 12" wide. Height, as required.

D. Type S04 - Welcome Signage.
   1. Location: Public Lobby 101, over clerks window.
   2. Type: Dimensional Letters.
   3. Color: Stainless Steel.
   4. Components:
      a. Text: "Welcome".
   5. Font: Artifakt Element.
   6. Overall Signage Dimensions: 12" high by 6'-8" wide, maximum.

E. Type S05 - Meeting Room Identification.
   1. Location: Public Lobby 101, over doors to Meeting Room 105.
   2. Type: Dimensional Letters.

3. Color: Stainless Steel.
4. Components:
    a. Text: "Meeting Room".
5. Font: Sans Serif. Artifakt Element.
6. Overall Signage Dimensions: 5" high by 4'-6" wide.

F. Type S06 - Restricted Area Signage.
1. Location: Doors 105, 105B, 106, and 109.
2. Type: Panel Signage.
3. Color: White, Red, and Black.
4. Components:
    a. White text on red field: "Restricted Area".
    b. Graphic: Black hand with red circle and crossed line.
    c. Black text on white field: "Authorized Personnel Only".
5. Font: Sans Serif. Arial, Helvetica, or similar.
6. Overall Signage Dimensions: 10" by 10", maximum.

G. Type S07 - Room Name Signage.
1. Location: All fixed-use rooms. See A850.
2. Type: Panel Signage.
3. Color: Black, White, and Stainless Steel.
4. Components:
    a. Text: Room name. Confirm schedule with Owner prior to sign fabrication.
    b. Text: Room number. Confirm schedule with Owner prior to sign fabrication.
    c. Braille: Reading room number.
5. Font: Sans Serif. Arial, Helvetica, or similar.
6. Overall Signage Dimensions: 3-1/2" high by 8-1/2" wide, maximum.

H. Type S08 - Restroom Signage.
1. Location: Identifying all restrooms.
2. Type: Panel Signage.
3. Color: Black, White, and Stainless Steel.
4. Components:
    a. Text: "Men", "Women", "Restroom", "Mens Lockers", or "Womens Lockers", as applicable.
    b. Graphics: Man and accessibility symbol, Woman and accessibility symbol, or Man and woman and accessibility symbol, as applicable.
    c. Braille: Reading room name.
5. Font: Sans Serif. Arial, Helvetica, or Similar.
6. Overall Signage Dimensions: 12" high by 8" wide, maximum.

I. Type S09 - Flexible Room Name Signage.
1. Location: All offices and flexible use rooms. See A850.
2. Type: Panel Signage with paper insert slot and clear acrylic cover.
3. Color: Black, White, and Stainless Steel.
4. Components:
    a. Room number. Confirm schedule with Owner prior to sign fabrication.
    b. Braille: Reading room number.
5. Font: Sans Serif. Arial, Helvetica, or similar.
6. Overall Signage Dimensions: 3-1/2" high by 8-1/2" wide, maximum.

J. Type S10 - AED signage.
1. Location: Lobby 101, above AED cabinet.
2. Type: Panel Signage.
3. Color: White, Red, and Black.

4. Components:
    a. Black Text: "AED".
    b. Graphic: Red heart with white lightning bolt.
5. Font: Sans Serif. Arial. Helvetica, or similar.
6. Overall Signage Dimensions: 8" by 8", maximum.

K. Type S11 - Locker Room Mural Stencil.
1. Location: Men's Lockers 155 and Women's Lockers 156.
2. Type: Vinyl stencil, used to paint CMU.
3. Components:
    a. To Be Determined.
4. Font: To Be Determined.
5. Overall Signage Dimensions: Mural to be full wall. 6'-8" high by 14'-3" wide

L. Type S12A - Fitness / Training Quote.
1. Location: 159 Fitness / Training.
2. Type: Vinyl Letters.
3. Color: Black.
4. Components:
    a. Quote: "The more sweat in your training, the less you bleed in battle - Richard Marcinko".
5. Font: Artifakt Element.
6. Overall Signage Dimensions: 7" high letters with 'Sweat' in 10" high letters. 32' wide.

M. Type S12B - Fitness / Training Graphic.
1. Location: 159 Fitness / Training.
2. Type: Wall Decal.
3. Color: Orange, White, Black, and Gray.
4. Components:
    a. Graphics and quotes. Design to be determined.
5. Font: Artifakt Element.
6. Overall Signage Dimensions: 10'-10" wide by 7'-10" high.

N. Type S13 - Recognition Wall.
1. Location: Corridor 114, outside of Classroom 122.
2. Type: Wall Decal with custom quote, Photo display system on standoffs.
3. Color: Red, White, Blue, Black, Stainless Steel.
4. Components:
    a. Wall Decal: Stylized American Flag with quote in white letters. Quote to be determined.
    b. Photo Display system: (2) panes of 12" by 12" acrylic on 1" dia. threaded, stainless steel barrel standoffs in cable standoff display system.
5. Font: Artifakt Element.
6. Overall Signage Dimensions: Decal to fit full length and width of wall. Field verify prior to fabrication.

O. Type S14A - Inspirational Quotes - Hall
1. Location: Corridor 142.
2. Type: Vinyl Letters.
3. Color: Black, White, Blue, Red.
4. Components:
    a. Text: "Act as if what you do makes a difference. It does. - William James".
    b. Graphic: Nixa Police Department Logo.
5. Font: Artifakt Element.
6. Overall Signage Dimensions: Font Size - 10" high. Logo graphic: 5'-5" high, width as required.

P. Type S14B - Inspirational Quotes - Roll Call

1. Location: Roll Call 153.
2. Type: Vinyl Letters and graphics.
3. Color: Blue and Black.
4. Components:
   a. Text: "
   b. Graphics: Stylized 'X' from Nixa Police Department Logo.
5. Font: Artifakt Element.
6. Overall Signage Dimensions: 25'-5" wide by 9'-4" high.

Q. Type S15 - Storm Shelter Identification Sign.
1. Comply with ICC-500 requirements.
2. Location: Corridor 114, above Doors to Classroom 122.
3. Type: Projecting panel signage. Projecting from wall at 45 degrees.
4. Color: White, Black, and Green.
5. Components:
   a. White Text on Green Field: "Storm Shelter".
   b. Graphic: Black Tornado on White Background.
6. Font: Sans Serif. Arial, Helvetica, or similar.
7. Overall Signage Dimensions: 12" wide by 8" high, maximum.

R. Type S16 - Storm Shelter Location Map.
1. Comply with ICC-500 requirements.
2. Location: 142 Corridor, 109 Corridor, and 114 Corridor outside Property Processing room.
3. Type: Panel Signage.
4. Color: Black, White & Red.
5. Components:
   a. Graphics: Black and White floor plan with room names and numbers. Red dashed line indicating route(s) to storm shelter.
   b. Text: "Storm Shelter Access"
6. Font: Sans Serif. Arial, Helvetica, or similar.
7. Overall Signage Dimensions: 12" high by 16" wide, maximum.

S. Type S17 - Storm Shelter Informational Signage.
1. Comply with ICC-500 requirements.
2. Location: 122 Classroom.
3. Type: Panel Signage.
4. Color: Black and White.
5. Components:
   a. Graphic: Tornado graphic.
   b. Text (larger): Tornado Safe Room.
   c. Text (smaller):
      1) Line 1: "Design Occupant Capacity: 60". Confirm with Architectural code sheets.
      2) Line 2: "Tornado Safe Room Design Wind Speed: 250 MPH".
      3) Line 3: "2021 ICC-500"
6. Font: Sans Serif. Arial, Helvetica, or similar.
7. Overall Signage Dimensions: 18" wide by 12" high, maximum.

T. Type S18 - Leaving Tornado Shelter Signage
1. Comply with ICC-500 requirements.
2. Location: 122 Classroom.
3. Type: Panel Signage.
4. Color: Black and White.
5. Components:

a. Text: "Notice: Now leaving the Tornado Shelter".
6. Font: Sans Serif. Arial, Helvetica, or similar.
7. Overall Signage Dimensions: 6" high by 12" wide, maximum.

U. Type ES01 - Restricted Area Sign (Post Mounted)
1. Location: See A050.
2. Type: Aluminum.
3. Color: White, Red, and Black.
4. Components:
a. White text on red field: "Restricted Area".
b. Graphic: Black hand with red circle and crossed line.
c. Black text on white field: "Authorized Personnel Only".
5. Font: Sans Serif. Arial, Helvetica, or Similar.
6. Mount to 2" dia. galvanized steel post. Install with 12" dia. concrete footing, minimum 30" deep. Extend post into footing a minimum of 24" into the footing. Bottom of sign mounted at 5'-0" AFF.
7. Overall Signage Dimensions: 12" wide by 18" high.

V. Type ES02 - Restricted Area Sign (Gate Mounted).
1. Location: All exterior vehicular and man gates.
2. Type: Aluminum.
3. Color: White, Red, and Black.
4. Components:
a. White text on red field: "Restricted Area".
b. Graphic: Black hand with red circle and crossed line.
c. Black text on white field: "Authorized Personnel Only".
5. Font: Sans Serif. Arial, Helvetica, or Similar.
6. Mount directly to gate at 4'-0" AFF to bottom of sign.
7. Overall Signage Dimensions: 12" wide by 18" high.

W. Type ES03 - Sally Port Door Numbers.
1. Location: Exterior wall above Sally Port garage doors.
2. Type: Dimensional Letters.
3. Color: Black
4. Components:
a. Text: "1" above southern sally port doors (On east and west facades) and "2" above northern sally port doors (On east and west facades).
5. Font: Sans Serif. Arial, Helvetica, or Similar.
6. Overall Signage Dimensions: 18" high, minimum.

X. Type ES04 - Safe Exchange Zone Signage.
1. Location: See A050.
2. Type: Aluminum.
3. Color: Orange, Black and White.
4. Components (2 signs):
a. Sign 1:
1) Graphics: Nixa Police Department Logo.
2) Black Text on White field: "Nixa Police Department".
3) White Text on Orange field: "Reserved Parking".
4) Black Text on White field: "Activities in this area are video recorded. For Emergencies call 911. For Non-Emergencies call 417-582-1030. For Administrative Offices call 417-725-2510. The city of Nixa is not responsible for liability arising out of property transactions or custody exchanges"
b. Sign 2:

1) White Text on Orange field: "Exchange Zone".
5. Font: Sans Serif. Arial, Helvetica, or similar.
6. Overall Signage Dimensions: 18" high by 12" wide, minimum.

Y. Type ES05 - No Parking Signage.
1. Location: In front of dumpster enclosure.
2. Type: Aluminum.
3. Color: Red and White.
4. Components:
a. Red Text on White field: "No Parking".
5. Font: Sans Serif. Arial, Helvetica, or Similar.
6. Overall Signage Dimensions: 18" high by 12" wide, minimum.

Z. Type ES06 - Main Entry Signage.
1. Location: East facade near main entry door. See A200.
2. Type: Aluminum with Dimensional backlit letters.
3. Color: Stainless Steel and Navy Blue "Nixa".
4. Components:
a. Aluminum Shield signage cabinet with stars and stripes cut outs.
b. Dimensional letter signage, backlit:
1) Small Letters: "City Of", Stainless Steel.
2) Large Letters: "Nixa", Navy Blue.
3) Small Letters: "Police Department", Stainless Steel.
5. Font: Match city logo font type / style.
6. Overall Signage Dimensions: 9'-6" high by 7'-6" wide.

AA. Type ES07 - Bronze Dedication Plaque.
1. Location: East facade near main entry door. See A200.
2. Type: Bronze Plaque.
3. Color: Natural Bronze.
4. Components:
a. Large Letters: "City of Nixa Police Station".
b. Graphics: City of Nixa Logo.
c. Smaller Letters, Line 1: "City of Nixa City Council." Below listing Mayor and council members. Coordinate with Owner for Names to be listed.
d. Smaller Letters, Line 2: "City Administrator - Jimmy Liles".
e. Smaller Letters, Line 3: "City Attorney - (Name, coordinate with Owner)".
f. Smaller Letters, Line 4: "Police Chief - Joe Campbell".
g. Smaller Letters, Line 5: "Architects - Insight Design Architects and Chiodini Architects".
h. Smaller Letters, Line 6: "Contractor
i. Smaller Letters, Line 7: "Owner's Representative - Navigate Building Solutions".
j. Larger Letters: "Dedicated 2026".
5. Font: Sans Serif. Arial, Helvetica, or similar.
6. Overall Signage Dimensions: 24" wide by 18" high.

BB. Type ES08 - Police Globe Sign.
1. Location: Lit globes on exterior bollards.
2. Type: Vinyl Letters.
3. Color: Black.
4. Components:
a. Text: "Police". All capital letters.
5. Font: Century.
6. Overall Signage Dimensions: 3-1/2" high, width as required.

CC. Type ES09 - Restricted Area Signage.
  1. Location: Exterior doors. See A050.
  2. Type: Vinyl Letters on Glass or hollow m
  3. Color: Black letters on glass. White letters on hollow metal.
  4. Components:
    a. Larger text: "Restricted Access".
    b. Smaller Text: "Authorized Personnel Only".
  5. Font: Sans Serif. Arial, Helvetica, or similar.
  6. Overall Signage Dimensions: 1'-10" wide, maximum. Height, as required.

DD. Type ES10 - Monument Sign.
  1. Location: Southeast corner of lot. See A050 and Civil Drawings.
  2. Type: Aluminum Signage Cabinet and backlit dimensional letters. See A052.
  3. Color and Components: See A052.
  4. Font: Match city logo fonts.
  5. Overall Signage Dimensions: 6'-0" by 3'-6".

EE. Type ES11 - Main Entry Door Signage.
  1. Location: Door 100.
  2. Type: Vinyl graphic on glass.
  3. Color: Black, White, Red, Blue.
  4. Components:
    a. Graphics: City of Nixa Police Department Logo.
  5. Font: City of Nixa Standard Font.
  6. Overall Signage Dimensions: 1'-10" wide. Height, as required.

FF. Type ES12 - Accessible Parking Signage.
  1. See Civil Details on sheet C8.0.

GG. Type ES13 - Building Numbers Signage.
  1. Location: Transom above Door 100.
  2. Type: Vinyl Letters on glass.
  3. Color: White.
  4. Components:
    a. Text: "305".
  5. Font: Sans Serif. Arial, Helvetica, or similar.
  6. Overall Signage Dimensions: 12" high numbers, width as required.

2.2 REGULATORY REQUIREMENTS

A. Accessibility Requirements: Comply with ADA Standards and ICC A117.1 and applicable building codes, unless otherwise indicated; in the event of conflicting requirements, comply with the most restrictive requirements.

2.3 DIMENSIONAL LETTERS

A. Applications: Exterior Building Signage.
  1. Mounting Location: Exterior as indicated on drawings.
  2. Illumination System: Halo-lit reverse channel letters / design.
    a. Provide products that are listed and labeled as complying with UL 879, where applicable.
    b. Power: 120 V, 60 Hz, 1 phase, 15 A.

B. Metal Letters:
  1. Material: Stainless steel sheet, fabricated reverse channel.
  2. Thickness: 1-1/2", minimum. Beveled corners.
  3. Letter Height: As indicated on signage schedule.
  4. Finish: Brushed, satin.
  5. Color: As Scheduled.

6. Mounting: Concealed screws.
7. Illumination System: Halo-lit reverse channel letters.
   a. Provide products that are listed and labeled as complying with UL 879, where applicable.
   b. Power: 120 V, 60 Hz, 1 phase, 15 A.

2.4 PANEL SIGNAGE

A. Application: Room and Door signs.
B. Description: Flat signs with engraved panel media, tactile characters.
C. Total Thickness: 1/8 inch.
D. Sign Edges: Squared.
E. Letter Edges: Beveled.
F. Corners: Squared.
G. Material: Laminated colored plastic engraved through face to expose core background color.
H. Profile: Flat panel without frame.
   1. Clear cover: For customer produced sign media, provide clear cover of polycarbonate plastic, glossy on black, nonglare on front.
I. Tactile Letters: Raised 1/32 inch minimum.
J. Braille: Grade II, ADA-compliant.
K. One-Side Wall Mounting: Tape Adhesive.
   1. Where signage is placed on glazing, provide shrouding panel on opposite side of the glass in color and material that matches the sign.

2.5 ACCESSORIES

A. Concealed Screws: Noncorroding metal; stainless steel, galvanized steel, chrome plated, or other.
B. Tape Adhesive: Double-sided tape, permanent adhesive.
C. Electrical Components and Devices: Listed and labeled as defined in NFPA 70 by a qualified testing agency.

PART 3 EXECUTION

3.1 EXAMINATION

A. Verify that substrate surfaces are ready to receive work.
B. Verify that electrical service is correctly sized and located to accommodate dimensional letter signs.
C. Notify Architect if conditions are not suitable for installation of signs; do not proceed until conditions are satisfactory.

3.2 INSTALLATION

A. Install in accordance with manufacturer's instructions.
B. Install with horizontal edges level.
C. Locate dimensional letter signs and mount at heights indicated on drawings and in accordance with ADA Standards and ICC A117.1.
D. Protect from damage until date of substantial completion; repair or replace damaged items.

END OF SECTION

SECTION 10 2113.19 - PLASTIC TOILET COMPARTMENTS

PART 1 GENERAL

1.1 SECTION INCLUDES

A. Solid plastic toilet compartments.

1.2 RELATED REQUIREMENTS

A. Section 05 1200 - Structural Steel Framing: Concealed steel support members.
B. Section 06 1000 - Rough Carpentry: Blocking and supports.
C. Section 10 2800 - Toilet, Bath, and Laundry Accessories.

1.3 REFERENCE STANDARDS

A. ASTM A666 - Standard Specification for Annealed or Cold-Worked Austenitic Stainless Steel Sheet, Strip, Plate, and Flat Bar.
B. ASTM E84 - Standard Test Method for Surface Burning Characteristics of Building Materials.
C. NFPA 286 - Standard Methods of Fire Tests for Evaluating Contribution of Wall and Ceiling Interior Finish to Room Fire Growth.

1.4 ADMINISTRATIVE REQUIREMENTS

A. Coordination: Coordinate the work with the placement of support framing and anchors in walls and ceilings.

1.5 SUBMITTALS

A. See Section 01 3000 - Administrative Requirements, for submittal procedures.
B. Product Data: Provide data on panel construction, hardware, and accessories.
C. Shop Drawings: Indicate partition plan, elevation views, dimensions, details of wall supports, door swings.
D. Samples: Submit two samples of partition panels, 2 by 2 inch in size illustrating panel finish, color, and sheen.
E. Manufacturer's Installation Instructions: Indicate special procedures.

PART 2 PRODUCTS

2.1 MANUFACTURERS

A. Solid Plastic Toilet Compartments:
    1. Scranton Products; Hiny Hiders Partitions: www.scrantonproducts.com/#sle.
    2. Substitutions: Section 01 6000 - Product Requirements.

2.2 PLASTIC TOILET COMPARTMENTS

A. Solid Plastic Toilet Compartments: Factory fabricated doors, pilasters, and divider panels made of solid molded high density polyethylene (HDPE), tested in accordance with NFPA 286; floor-mounted headrail-braced.
    1. Colors: black for doors, black for panels.
    2. Doors:
        a. Thickness: 1 inch.
        b. Width: 24 inch.
        c. Width for Handicapped Use: 36 inch, out-swinging.
        d. Height: 66 inch.
        e. Shiplap Doors
    3. Panels:
        a. Thickness: 1 inch.
        b. Height: 66 inch.

4. Pilasters:
   a. Thickness: 1 inch.
   b. Width: As required to fit space; minimum 3 inch.

2.3 ACCESSORIES

A. Pilaster Shoes: Plastic, to match compartments, 3 inches high; concealing floor fastenings.
B. Head Rails: Extruded aluminum, anti-grip profile.
C. Attachments, Screws, and Bolts: Stainless steel , tamper proof type.
D. Hinges: Stainless steel, manufacturer's standard finish.
   1. Standard Doors: Continuous-type hinge, self closing. 65" H
   2. ADA Doors: Edge Mounted Continuous Hinge - 65" H
E. Door Hardware: Stainless steel, manufacturer's standard finish.
   1. Door Latch: Occupancy Indicator Latch and Housing with exterior emergency access feature
      a. [Green for occupied and red not occupied
      b. Slide bolt and button
F. Coat Hook: One per compartment, mounted on door.

PART 3 EXECUTION

3.1 EXAMINATION

A. Verify that field measurements are as indicated.
B. Verify correct spacing of and between plumbing fixtures.
C. Verify correct location of built-in framing, anchorage, and bracing.

3.2 INSTALLATION

A. Install partitions secure, rigid, plumb, and level in accordance with manufacturer's instructions.
B. Maintain 3/8 inch to 1/2 inch space between wall and panels and between wall and end pilasters.
C. Attach panel brackets securely to walls using anchor devices.
D. Attach panels and pilasters to brackets. Locate head rail joints at pilaster center lines.

3.3 TOLERANCES

A. Maximum Variation From True Position: 1/4 inch.
B. Maximum Variation From Plumb: 1/8 inch.

3.4 ADJUSTING

A. Adjust and align hardware to uniform clearance at vertical edge of doors, not exceeding 3/16 inch.
B. Adjust hinges to position doors in partial opening position when unlatched. Return out-swinging doors to closed position.

END OF SECTION

SECTION 10 2219 - DEMOUNTABLE PARTITIONS

PART 1 GENERAL

1.1 SECTION INCLUDES

A. Metal stud framing system.
B. Acoustic insulation.
C. Gypsum board partition panels.
D. Glass partition panels.
E. Frames for doors and glazed openings.
F. Doors and door hardware.
G. Glazing.
H. Wall base.

1.2 REFERENCE STANDARDS

A. ASTM A653/A653M - Standard Specification for Steel Sheet, Zinc-Coated (Galvanized) or Zinc-Iron Alloy-Coated (Galvannealed) by the Hot-Dip Process.
B. ASTM B221 - Standard Specification for Aluminum and Aluminum-Alloy Extruded Bars, Rods, Wire, Profiles, and Tubes.
C. ASTM B221M - Standard Specification for Aluminum and Aluminum-Alloy Extruded Bars, Rods, Wire, Profiles, and Tubes (Metric).
D. ASTM C645 - Standard Specification for Nonstructural Steel Framing Members.
E. ASTM C1036 - Standard Specification for Flat Glass.
F. ASTM C1048 - Standard Specification for Heat-Strengthened and Fully Tempered Flat Glass.

1.3 SUBMITTALS

A. See Section 01 3000 - Administrative Requirements, for submittal procedures.
B. Product Data: Provide data on metal framing, joints, and decorative finish.
C. Shop Drawings: Indicate layout, module joint locations, and special details associated with acoustic seals.
D. Manufacturer's Instructions: Indicate special procedures.

1.4 QUALITY ASSURANCE

A. Manufacturer Qualifications: Company specializing in manufacturing products specified in this section with not less than three years of documented experience.
B. Installer Qualifications: Company specializing in performing work of type specified and with at least three years of documented experience.

PART 2 PRODUCTS

2.1 PERFORMANCE REQUIREMENTS

A. Structural Performance: Provide demountable partitions capable of withstanding the effects of gravity loads and the following loads and stresses within limits and under conditions indicated:
   1. Load-Bearing Capacity of Panel System: Two shelving units loaded with 300 lbs each and one worksurface with 270 lb meeting the functional load requirement when tested in according to BIFMA X 5.6-2003 - Section 6, Table 1
   2. Transverse-Load Capacity of Panel System:
      a. Interior wall panel deflections cannot exceed 1/120 of the span for flexible facing material or 1/240 of the span for brittle facing materials under 5 psf uniform transverse design load per the 2018 IBC Table 1604.3. Interior wall panel deflections for glass panel frames cannot exceed 1/175 of the span or 0.75 inches, whichever is less under a 5 psf uniform transverse design load per the 2018 IBC Table 2403.3.

b. 2018 IBC Section 1607.15: Interior demountable partition or butt-glazed entrances / storefronts wall products that exceed 6 feet in height, including their finish materials, have adequate strength to resist the loads which they are subjected but not less than a horizontal load of 5 psf.
c. Seismic Performance: Provide demountable partitions capable of withstanding the effects of earthquake motions determined according to ASCE 7 - Minimum Design Loads for Buildings and Other Structures.

3. Sound Control: Solid panels provide an overall Sound Transmission Class of not less than 44 STC rating in accordance with ASTM E90, ASTM E412 when recessed ceiling channel, recessed panel connectors and wallposts are used. Solid panels provide an overall sound transmission class of not less than 48 STC rating in accordance with ASTM E90, ASTM E412 when flush ceiling channel, flush panel connectors and U-channels are used.
4. Fire Retardancy: No flammable materials are used in the manufacture of the wall system. Provide independent laboratory tests for surface-burning characteristics of panel finishes in accordance with ASTM E84. Flame Spread / Smoke Development: Class A for powder-coat finish and steel, and 100% Polyester or Recycled Polyester fabric per IBC, Section 803.1.2.
5. Electrical Components, Devices and Accessories: UL listed and labelled as defined in NFPA 70, Article 110, by a testing agency acceptable to authorities having jurisdiction, and marked for intended use.

2.2 MANUFACTURERS

A. Solid Demountable Board Partitions:
   1. KI International; Genius Wall: www.ki.com/#sle.
   2. Substitutions: Section 01 6000 - Product Requirements.
B. Glass Demountable Partitions:
   1. Same Manufacturer as Solid Wall.
   2. Substitutions: Section 01 6000 - Product Requirements.

2.3 SOLID DEMOUNTABLE PARTITIONS

A. Partition System: Demountable, double sided, non-progressive, capable of four direction lateral expansion with reusable components.
   1. Module Width: As indicated on drawings.
   2. Partition Height: To finished ceiling.
   3. Nominal Partition Thickness: Manufac.
   4. Joints: Vertical, butt joint.
   5. Utility Raceways: Provide access through posts, studs, cap channels, vertical support profiles, and floor and base channels.

2.4 DEMOUNTABLE GLASS PARTITIONS

A. Partition System: Demountable, single dry glazed, non-progressive, capable of four direction lateral expansion with reusable components.
   1. Module Width: As indicated on drawings.
   2. Partition Height: To finished ceiling.
   3. Nominal Partition Thickness: Manufacturer's standard to match Solid partitions.
   4. Joints: Vertical, batten with concealed fasteners.
   5. Utility Raceways: Provide access through posts, cap channels, vertical support profiles, and floor and base channels.

2.5 MATERIALS

A. Sheet Steel: Hot-dipped galvanized steel sheet, ASTM A653/A653M, with G90/Z275 coating.
B. Aluminum Extrusions: ASTM B221 (ASTM B221M), 6063 alloy, T6 temper.
C. Glazing:

1. Tempered Glass: Annealed flat glass meeting requirements of ASTM C1036, Type 1-Transparent Flat, Class 1-Clear, Quality Q3, and fully tempered in accordance with ASTM C1048, Kind FT.
    a. Thickness: 3/8 inch.
    b. Prepare glazing panels for indicated fittings and hardware before tempering.
    c. Temper glass materials horizontally; visible tong marks or tong mark distortions are not permitted.

D. Acoustic Insulation:
1. Type: As required for acoustic attenuation indicated.
2. Thickness: As required for acoustic attenuation indicated.

E. Solid Panels with Steel Substrate:
1. Panel Finish: Powder Coated Steel
2. Panel Color and Pattern: As selected by Architect from manufacturer's full range
3. Magnetic Accessory

2.6 PARTITION COMPONENTS

A. Studs and Tracks: ASTM C645, sheet steel, 26 gauge, 0.0179 inch minimum thickness, C shaped, with serrated faces.
B. Concealed Clip System: Formed steel clip attached to stud, with projection each side to penetrate partition panel edge.
C. Miscellaneous Trim: Snap-on accessories.
D. Wall Base: Extruded aluminum.
1. Height: To match adjacent base.
2. Color: As selected by Architect.

2.7 DOOR AND WINDOW COMPONENTS

A. Frames: Extruded aluminum, manufacturers standard profile and thickness.
1. Finish: Polyester powder coat finish.
2. Color: As selected by Architect.
3. Prepare and reinforce door frames for door hardware; provide resilient silencers color matched to frame color.

B. Sliding Glass Doors: Specified in Section 08 4126.
C. Door Hardware: Manufacturer's standard Complying with Architect's requirements.

PART 3 EXECUTION

3.1 INSTALLATION

A. Metal Stud Framing System:
1. Construct framing as indicated on drawings.
2. Install studs in accordance with partition system manufacturer's installation instructions.
    a. Spacing: 16 inch.
3. Install double studs at jambs of door frames and glazed frames.
4. Coordinate installation of anchors, wall mounted reinforcement, electrical, and mechanical work placed within framing.

B. Partition Panels:
1. Install panels in accordance with partition system manufacturer's instructions.

C. Frames: Install in accordance with partition system manufacturer's instructions; erect vertical members plumb, and horizontal members level.
D. Doors: Install in accordance with partition system manufacturer's instructions; hang to fit square within frame and to swing freely, without binding.
E. Door Hardware: Install in accordance with partition system manufacturer's instructions.
F. Wall Base: Install in accordance with partition system manufacturer's instructions.

3.2 TOLERANCES

3.3 ADJUSTING

A. Adjust doors and frames to provide smooth door operation from open to closed position without gravity movement of door from any position.

3.4 PROTECTION

A. Do not permit subsequent construction activities to cause damage to appearance or operation of installed partition components before Date of Substantial Completion.

END OF SECTION

SECTION 10 2600 - WALL AND DOOR PROTECTION

PART 1 GENERAL

1.1 SECTION INCLUDES

A. Corner guards.
B. Protective wall covering.

1.2 RELATED REQUIREMENTS

A. Section 06 1000 - Rough Carpentry: Blocking for wall and corner guard anchors.
B. Section 09 2116 - Gypsum Board Assemblies: Placement of supports in stud wall construction.

1.3 REFERENCE STANDARDS

A. ASTM E84 - Standard Test Method for Surface Burning Characteristics of Building Materials.

1.4 SUBMITTALS

A. See Section 01 3000 - Administrative Requirements for submittal procedures.
B. Shop Drawings: Include plans, elevation, sections, and attachment details.
C. Samples: Submit samples illustrating component design, configurations, joinery, color and finish.
   1. Submit two sections of corner guards and protective corridor handrails, 24 inches long.
   2. Submit two samples of protective wall covering, 6 by 6 inches square.
D. Manufacturer's Instructions: Indicate special procedures, perimeter conditions requiring special attention.
E. Warranty Documentation: Submit manufacturer warranty and ensure that forms have been completed in Owner's name and registered with manufacturer.
F. Maintenance Materials: Furnish the following for Owner's use in maintenance of project:
   1. See Section 01 6000 - Product Requirements, for additional provisions.
   2. Extra Stock Materials: Remainder of Roll; minimum 3 LY of each protective wall covering.
G. Maintenance Data: Manufacturer's instructions for care and cleaning of each type of product. Include information about both recommended and potentially detrimental cleaning materials and methods.

1.5 DELIVERY, STORAGE, AND HANDLING

A. Deliver wall and door protection items in original, undamaged protective packaging. Label items to designate installation locations.
B. Protect work from moisture damage.
C. Protect work from UV light damage.
D. Do not deliver products to project site until areas for storage and installation are fully enclosed, and interior temperature and humidity are in compliance with manufacturer's recommendations for each type of item.
E. Store products in either horizontal or vertical position, in compliance with manufacturer's instructions.

1.6 WARRANTY

A. See Section 01 7800 - Closeout Submittals for additional warranty requirements.

PART 2 PRODUCTS

2.1 MANUFACTURERS

A. Corner Guards:
   1. Inpro: www.inprocorp.com/#sle.
   2. Wolf-Gordon; www.wolfgordon.com/#isle..
   3. Substitutions: Not permitted.
B. Protective Wall Covering:
   1. Wolf Gordon; www.wolfgordon.com/#isle..
   2. Substitutions: Not permitted.

C. Protective Wall Panels: Fiber Reinforced Panel (FRP):
   1. Panolam Industries International, Inc: www.panolam.com/#sle.
   2. Crane Composites; www.cramecomposites.com/#isle..
   3. Substitutions: See Section 01 6000 - Product Requirements.

2.2 PRODUCT TYPES

A. Corner Guards (CG-2)- Flush Mounted: Rigid vinyl drywall corner bead with semi-rigid vinyl corner guard.
   1. Corner: 90 degrees.
   2. Length: 8' length
   3. Color: As indicated on drawings
   4. Manufacturer:
      a. Inpro; www.inprocorp.com/#isle..
      b. Substitutions: Not permitted.

B. Corner Guards (CG-1,CG-3, CG-4) - Surface Mounted:
   1. Material: High impact vinyl .08" thick color through.
   2. Width of Wings: 1 1/2 and 3/4 inches - refer to drawings.
   3. Corner: Square.
   4. Color: As indicated on drawings.
   5. Length: One 8' length.
   6. Preformed end caps.
   7. Manufacturers:
      a. Inpro; www.inprocorp.com/#isle..
      b. wolf gordon; www.wolfgordon.com/#isle..
      c. Substitutions: Not permitted.

C. Protective Wall Covering: (WP-1 and WP-2)
   1. Material: High-impact acrylic-modified vinyl.
   2. Thickness: 0.040 inch.
   3. Color: As indicated on drawings.
   4. Accessories: Provide manufacturer's standard color-matched top/end cap.
      a. Size: 52"/54" length x 81' roll
      b. Inside Corner Trim: Standard angle
      c. Outside Corner Trim: Standard angle.
   5. Mounting: Adhesive - refer to manufacturer's recommendation
   6. Manufacturer:
      a. wolf gordon; www.wolfgordon.com/#isle..
      b. Substitutions: Not permitted.

D. Protective Wall Panels: (FRP-1)
   1. Material: Fiber Reinforced Panel (FRP): Thermofused melamine overlay, decorative paper and fire-rated phenolic paper with fiber reinforcing inner layers.
   2. Thickness: 0.075 inch.
   3. Panel Size: 4 feet by 8 feet.
   4. Color and Pattern: As indicated on drawings.
   5. Texture: As indicated on drawings.
   6. Accessories: Provide manufacturer's standard PVC color-matched trim and moldings.
      a. Outside Corner Trim: Flat.
   7. Mounting: Adhesive - refer to manufacturer's recommendation

2.3 FABRICATION

A. Fabricate components with tight joints, corners and seams.

PART 3 EXECUTION

3.1 EXAMINATION

A. Verify that rough openings, concealed blocking, and anchors are correctly sized and located.
B. Verify that field measurements are as indicated on drawings.
C. Verify that substrate surfaces for adhered items are clean and smooth.
   1. Test painted or wall covering surfaces for adhesion in inconspicuous area, as recommended by manufacturer. Follow adhesive manufacturer's recommendations for remedial measures at locations and/or application conditions where adhesion test's results are unsatisfactory.
D. Start of installation constitutes acceptance of project conditions.

3.2 INSTALLATION

A. Install components in accordance with manufacturer's instructions, level and plumb, secured rigidly in position to supporting construction.
B. Position corner guard 4 inches above finished floor to 48 inches high.
C. Position protective wall covering no less than 1 inch above finished floor to allow for floor level variation.
   1. Wainscot Installation: Establish a level line at the specified height for entire length of run. Install by aligning top of edge of covering with this line.
   2. Apply adhesive with 1/8 inch V-notch trowel to an area of wall surface that can be completed within cure time of the adhesive.
   3. Install trim pieces as required for a complete installation. Allow tolerance for thermal movement.
   4. Use a roller to ensure maximum contact with adhesive.

3.3 TOLERANCES

A. Maximum Variation From Level or Plane For Visible Length: 1/4 inch.

3.4 CLEANING

A. See Section 01 7419 - Construction Waste Management and Disposal, for additional requirements.
B. Clean wall and door protection items of excess adhesive, dust, dirt, and other contaminants.

END OF SECTION

SECTION 10 2641 - BALLISTICS RESISTANT PANELS

PART 1 GENERAL

1.1 SECTION INCLUDES

A. Laminated fiberglass ballistics-resistant panels.

1.2 REFERENCE STANDARDS

A. ASTM E84 - Standard Test Method for Surface Burning Characteristics of Building Materials.
B. UL 752 - Standard for Bullet-Resisting Equipment.

1.3 SUBMITTALS

A. See Section 01 3000 - Administrative Requirements for submittal procedures.
B. Product Data: Manufacturer's current data sheets on each product to be used.
C. Certificates: Submit printed data to indicate compliance with following requirements.
   1. UL Listing verification and UL 752 Current Test Results as provided by Underwriters Laboratories.
D. Manufacturer's Instructions: Indicate preparation and installation.

1.4 QUALITY ASSURANCE

A. Manufacturer Qualifications: Company specializing in manufacturing products specified in this section, with at least three years of documented experience.

1.5 WARRANTY

A. See Section 01 7800 - Closeout Submittals for additional warranty requirements.
B. Manufacturer Warranty: Provide two year manufacturer warranty for materials and workmanship against defects commencing on the Date of Substantial Completion.

PART 2 PRODUCTS

2.1 MANUFACTURERS

A. Laminated Glass Fiber Ballistics-Resistant Panels:
   1. Armortex: www.armortex.com/#sle.
   2. Substitutions: See Section 01 6000 - Product Requirements.

2.2 LAMINATED FIBER BALLISTICS-RESISTANT PANELS

A. General:
   1. Laminated fiber ballistics-resistant panels to be non-ricochet type. When struck by a bullet or projectile, the panels to delaminate in such a way that absorbs the energy, stops the projectile, and prevents ricochet or spalling.
   2. Ballistics Resistance of Joints: Equal to that of the panel.
B. Performance Requirements:
   1. Ballistics Resistance Rating: Listed and labeled as tested in accordance with UL 752 Level 3 (super-power handgun) threat rating.
   2. Surface Burning Characteristics: Maximum flame spread index of 25 and smoke developed index of 450; when tested in accordance with ASTM E84.
C. Laminated Fiber Panels:
   1. Material: Multiple layers of fiberglass woven roving bonded together with resin and compressed into flat rigid sheets.
   2. Panel Size: 4 ft by 8 ft.
   3. Panel Thickness: Minimum thickness required for selected UL 752 threat level.
   4. Attachment Method: Mechanical fasteners.

PART 3 EXECUTION

3.1 INSTALLATION

A. Install panels in accordance with manufacturer's instructions and in proper relationship with adjacent construction.
   1. Maintain ballistics-resistive rating at panel junctures with concrete floor and roof slabs, bullet-resistive door and window frames, and required penetrations.

B. Reinforce panel joints with a minimum 4 inch wide back-up layer of ballistics-resistant material, centered on panel joints.

C. Secure panels using screws.

END OF SECTION

SECTION 10 2800 - TOILET, BATH, AND LAUNDRY ACCESSORIES

PART 1 GENERAL

1.1 SECTION INCLUDES

A. Commercial toilet accessories.
B. Commercial shower and bath accessories.
C. Institutional ligature-resistant toilet accessories.
D. Diaper changing stations.
E. Utility room accessories.

1.2 RELATED REQUIREMENTS

A. Section 09 2216 Non Structural Metal Framing: Concealed supports for accessories, including in wall framing and plates.
B. Section 08 8300 - Mirrors: Lit mirrors.
C. Section 09 3000 - Tiling
D. Section 10 2113.19 - Plastic Toilet Compartments.

1.3 REFERENCE STANDARDS

A. ADA Standards - Americans with Disabilities Act (ADA) Standards for Accessible Design.
B. ASTM A269/A269M - Standard Specification for Seamless and Welded Austenitic Stainless Steel Tubing for General Service.
C. ASTM A653/A653M - Standard Specification for Steel Sheet, Zinc-Coated (Galvanized) or Zinc-Iron Alloy-Coated (Galvannealed) by the Hot-Dip Process.
D. ASTM A666 - Standard Specification for Annealed or Cold-Worked Austenitic Stainless Steel Sheet, Strip, Plate, and Flat Bar.
E. ASTM B86 - Standard Specification for Zinc and Zinc-Aluminum (ZA) Alloy Foundry and Die Castings.
F. ASTM B456 - Standard Specification for Electrodeposited Coatings of Copper Plus Nickel Plus Chromium and Nickel Plus Chromium.
G. ASTM C1036 - Standard Specification for Flat Glass.
H. ASTM C1048 - Standard Specification for Heat-Strengthened and Fully Tempered Flat Glass.
I. ASTM C1503 - Standard Specification for Silvered Flat Glass Mirror.
J. ASTM D5047 - Standard Specification for Polyethylene Terephthalate Film and Sheeting.
K. ASTM E84 - Standard Test Method for Surface Burning Characteristics of Building Materials.
L. ASTM F2285 - Standard Consumer Safety Performance Specification for Diaper Changing Tables for Commercial Use.

1.4 ADMINISTRATIVE REQUIREMENTS

A. Coordinate the work with the placement of internal wall reinforcement, concealed ceiling supports, and reinforcement of toilet partitions to receive anchor attachments.

1.5 SUBMITTALS

A. See Section 01 3000 - Administrative Requirements, for submittal procedures.
B. Product Data: Submit data on accessories describing size, finish, details of function, and attachment methods.

PART 2 PRODUCTS

2.1 MANUFACTURERS

A. Commercial Toilet, Shower, and Bath Accessories:
   1. Bobrick www.bobrick.com/#sle.
   2. Cintas: ww.cintas.com/#sle.

B. Diaper Changing Stations:
   1. Koala Kare Products; KB310-SSWM: www.koalabear.com/#sle.
   2. Substitutions: 01 6000 - Product Requirements.

2.2 MATERIALS

A. Accessories - General: Shop assembled, free of dents and scratches and packaged complete with anchors and fittings, steel anchor plates, adapters, and anchor components for installation.
   1. Grind welded joints smooth.
   2. Fabricate units made of metal sheet of seamless sheets with flat surfaces.
B. Keys: Provide 4 keys for each accessory to Owner; master key lockable accessories.
C. Stainless Steel Sheet: ASTM A666, Type 304.
D. Stainless Steel Tubing: ASTM A269/A269M, Grade TP304 or TP316.
E. PETG Plastic Sheet: ASTM D5047.
F. Mirror Glass: Tempered safety glass, ASTM C1048; and ASTM C1036 Type I, Class 1, Quality Q2, with silvering as required.
G. Fasteners, Screws, and Bolts: Hot dip galvanized; tamper-proof; security type.

2.3 FINISHES

A. Stainless Steel: Satin finish, unless otherwise noted.
B. Chrome/Nickel Plating: ASTM B456, SC 2, satin finish, unless otherwise noted.
C. Baked Enamel: Pretreat to clean condition, apply one coat primer and minimum two coats epoxy baked enamel.

2.4 COMMERCIAL TOILET ACCESSORIES

A. Toilet Paper Dispenser: Double roll, surface mounted, for cored type rolls.
   1. Products:
      a. Cintas; Signature Series: www.Cintas.com/#sle.
B. Paper Towel Dispenser: Electric, roll paper type.
   1. Material: Stainless steel.
   2. Paper Discharge: Touchless automatic.
   3. Capacity: 8 inch diameter roll.
   4. Mounting: Surface mounted.
   5. Power: Battery operated.
   6. Refill Indicator: Illuminated refill indicator.
   7. Products:
      a. Cintas; Signature Series; Cintas.com/sle#.
      b. Substitutions: Not permitted.
C. Waste Receptacle: Recessed, stainless steel, seamless lower door for access to container, reinforced panel full height of door, Removable front panel for cleaning continuously welded bottom pan and seamless exposed flanges.
   1. Liner: Removable rigid molded plastic receptacle.
   2. Minimum capacity: 12 gallons.
   3. Products:
      a. Bobrick; B-43644; www.bobrick.com/sle#.
      b. Substitutions: Section 01 6000 - Product Requirements.
D. Automated Soap Dispenser: Soap lather dispenser, wall-mounted, with stainless steel cover and window to gauge soap level, tumbler lock.
   1. Products:
      a. Cintas Signature Series; www.cintas.com/lse#.
      b. Substitutions: Not permitted.

E. Mirrors: Frameless, 1/4 inch thick tempered safety glass; ASTM C1048.
   1. Size: As indicated on drawings.
   2. Frame: 0.05 inchangle shapes, with mitered corners, and tamperproof hanging system; satin finish.
F. Backlit Mirrors: Refer to Section 08 83000
G. Grab Bars: Stainless steel, smooth surface.
   1. Standard Duty Grab Bars:
      a. Push/Pull Point Load: 250 pound-force, minimum.
      b. Dimensions: 1-1/4 inch outside diameter, minimum 0.05 inch wall thickness, exposed flange mounting, 1-1/2 inch clearance between wall and inside of grab bar.
      c. Finish: Satin.
      d. Length and Configuration: As indicated on drawings.
      e. Products:
         1) Bobrick Accessories Inc; www.bobrick.com.
         2) Substitutions: Section 01 6000 - Product Requirements.
H. Sanitary Napkin Disposal Unit: Stainless steel, surface-mounted, self-closing door, locking bottom panel with full-length stainless steel piano-type hinge, removable receptacle.
   1. Products:
      a. Bobrick Accessories Inc; B-270: www.bobrick.com.
      b. Substitutions: Section 01 6000 - Product Requirements.

2.5 COMMERCIAL SHOWER AND BATH ACCESSORIES

A. Shower Curtain Rod: Stainless steel tube, 1 inch outside diameter, 0.04 inch wall thickness, satin-finished, with 3 inch outside diameter, minimum 0.04 inch thick satin-finished stainless steel flanges, for installation with exposed fasteners.
   1. Products:
      a. Bobrick Accessories Inc; B-6047 x 36; www.bobrick.com.
      b. Substitutions: Section 01 6000 - Product Requirements.
B. Shower Curtain:
   1. Material: Opaque vinyl, 0.008 inch thick, matte finish, with antibacterial treatment, flameproof and stain-resistant.
   2. Size: 36 by 72 inches, hemmed edges.
   3. Grommets: Stainless steel; pierced through top hem on 6 inch centers.
   4. Color: White.
   5. Shower Curtain Hooks: Chrome-plated or stainless steel spring wire designed for snap closure.
   6. Products:
      a. Bobrick Accessories Inc; B-204-2 (42 x 72 curtain) 203-1 (shower Curtain Hooks); www.bobrick.com.
      b. Substitutions: Section 01 6000 - Product Requirements.
C. Folding Shower Seat: Wall-mounted surface; welded tubular seat frame, structural support members, swing-down legs, hinges, and mechanical fasteners of Type 304 stainless steel, L-shaped, right hand seat.
   1. Seat: Phenolic or polymeric composite one-piece seat or seat slats, of Ivory White color.
   2. Size: ADA Standards compliant.
   3. Products:
      a. Bobrick Accessories Inc; B-5192: www.bobrick.com.
      b. Substitutions: Section 01 6000 - Product Requirements.

D. Robe Hook: Heavy-duty stainless steel, single-prong, rectangular-shaped bracket and backplate for concealed attachment, satin finish.
   1. Product:
      a. Bobrick Accessories Inc; B-9542: www.bobrick.com.
E. Wall Shelf: Heavy-duty stainless steel, roll-formed edges , Flanges and support arms, Mounting bracket and Concealed backplate, bright polished finish.
   1. Products:
      a. Bobrick Accessories Inc; B-683: www.bobrick.com.
      b. Substitutions: Section 01 6000 - Product Requirements.

2.6 UTILITY ROOM ACCESSORIES

A. Combination Utility Shelf/Mop and Broom Holder: 0.05 inch thick stainless steel, Type 304, with 1/2 inch returned edges, 0.06 inch steel wall brackets.
   1. Hooks: four stainless steel rag hooks at shelf front.
   2. Mop/broom holders: Three spring-loaded rubber cam holders at shelf front.
   3. Length: 34 inches.
   4. Products:
      a. Bobrick B239 www.bobrick.com/#sle.
      b. Substitutions: 01 6000 - Product Requirements.

PART 3 EXECUTION

3.1 EXAMINATION

A. Verify existing conditions before starting work.
B. Verify exact location of accessories for installation.
C. For electrically-operated accessories, verify that electrical power connections are ready and in the correct locations.
D. Verify that field measurements are as indicated on drawings.
E. See Section 09 2216 Non Structural Metal Framing for installation of blocking, reinforcing plates, and concealed anchors in walls and ceilings.

3.2 PREPARATION

A. Deliver inserts and rough-in frames to site for timely installation.
B. Provide templates and rough-in measurements as required.

3.3 INSTALLATION

A. Install accessories in accordance with manufacturers' instructions in locations indicated on drawings.
B. Install plumb and level, securely and rigidly anchored to substrate.
C. Mounting Heights: As required by accessibility regulations, unless otherwise indicated.
   1. Mirrors: 40 inch, measured from floor to bottom of mirrored surface.
   2. Other Accessories: As indicated on drawings.

3.4 PROTECTION

A. Protect installed accessories from damage due to subsequent construction operations.

END OF SECTION

SECTION 10 4300 - EMERGENCY AID SPECIALTIES

PART 1 GENERAL

1.1 SECTION INCLUDES

A. Automated external defibrillators (AEDs).
B. Automated external defibrillator (AED) cabinets.
C. Accessories.

1.2 DEFINITIONS

A. Automated External Defibrillator (AED): A Food and Drug Administration (FDA)-approved portable device, which automatically analyzes the heart rhythm and recognizes the presence of ventricular fibrillation and/or tachycardia. If defibrillation is warranted, the AED automatically charges and prompts (visual and/or audio) the operator to deliver an electrical shock.

1.3 REFERENCE STANDARDS

A. ASTM E814 - Standard Test Method for Fire Tests of Penetration Firestop Systems.

1.4 SUBMITTALS

A. See Section 01 3000 - Administrative Requirements for submittal procedures.
B. Product Data: Provide AED operational features, color and finish, anchorage details, and installation instructions.
C. Shop Drawings: Indicate locations of cabinets and cabinet physical dimensions.

PART 2 PRODUCTS

2.1 AUTOMATED EXTERNAL DEFIBRILLATORS (AEDS)

A. Automated External Defibrillators (AEDs) - General: FDA approval required.

2.2 EMERGENCY AID CABINETS

A. Type: Automated external defibrillator (AED).
B. Cabinet Construction: Non-fire-rated.
   1. Formed primed steel sheet; 0.036 inch thick base metal.
C. Cabinet Configuration: Semi-recessed type.
   1. Size to accommodate AED.
   2. Trim: Flat square edge, with 1 inch wide face.
D. Door: 0.036 inch metal thickness, reinforced for flatness and rigidity with wire pull handle and nylon catch. Hinge door for 180 degree opening with two butt hinges.
E. Door Glazing: Acrylic plastic, clear, 1/8 inch thick, flat shape and set in resilient channel glazing gasket.
F. Finish of Cabinet Exterior Trim and Door: Powder coat, black color.
G. Finish of Cabinet Interior: White powder coat.

2.3 ACCESSORIES

A. Cabinet Door Signage: 'AED” decal, or vinyl self-adhering, prespaced red lettering and identifying graphic in accordance with authorities having jurisdiction (AHJ).
B. Plastic Wall Signage: Flat style.

PART 3 EXECUTION

3.1 EXAMINATION

A. Verify rough openings for cabinet are correctly sized and located.

3.2 INSTALLATION

A. Install in accordance with manufacturer's instructions.
B. Install cabinets plumb and level in wall openings, 48 inches from finished floor to operable handle.
C. Place AEDs in cabinets.

D. Wall Signs:
   1. Location: Where shown.
   2. Apply on walls after field painting is completed and has been accepted.
E. Cabinet Lettering:
   1. Location: Face of glazing surface.
   2. Apply lettering on factory-finished cabinets either at the factory or just prior to Substantial Completion.

3.3 ADJUSTING AND CLEANING

A. Remove temporary protective coverings and strippable films, if any, as cabinets are installed unless otherwise indicated in manufacturer's written installation instructions.
B. Touch up marred finishes. Replace cabinets that cannot be restored to factory-finished appearance. Use materials and procedures recommended by cabinet manufacturer.

END OF SECTION

SECTION 10 4400 - FIRE PROTECTION SPECIALTIES

PART 1 GENERAL

1.1 SECTION INCLUDES

A. Fire extinguishers.
B. Fire extinguisher cabinets.
C. Accessories.

1.2 REFERENCE STANDARDS

A. NFPA 10 - Standard for Portable Fire Extinguishers.

1.3 SUBMITTALS

A. See Section 01 3000 - Administrative Requirements, for submittal procedures.
B. Product Data: Provide extinguisher operational features, extinguisher ratings and classifications, and color and finish.
C. Shop Drawings: Indicate locations of cabinets, cabinet physical dimensions, rough-in measurements for recessed cabinets, and accessories required for complete installation.

PART 2 PRODUCTS

2.1 FIRE EXTINGUISHERS

A. Fire Extinguishers - General: Comply with product requirements of NFPA 10 and applicable codes, whichever is more stringent.
B. Multipurpose Dry Chemical Type Fire Extinguishers: Carbon steel tank, with pressure gauge.
   1. Class: A:B:C type.
   2. Size: 5 pound.
   3. Finish: Baked polyester powder coat, red color.
   4. Temperature range: Minus 40 degrees F to 120 degrees F.

2.2 FIRE EXTINGUISHER CABINETS

A. Cabinet Construction: Non-fire rated.
   1. Formed primed steel sheet; 0.036 inch thick base metal.
B. Cabinet Configuration: Semi-recessed and Surface-mounted types.
   1. Size to accommodate accessories.
   2. Trim: Flat square edge, with 1 inch wide face.
C. Door: 0.036 inch metal thickness, reinforced for flatness and rigidity with nylon catch. Hinge doors for 180 degree opening with two butt hinges.
D. Door Glazing: Acrylic plastic, clear, 1/8 inch thick, flat shape and set in resilient channel glazing gasket.
E. Cabinet Mounting Hardware: Appropriate to cabinet, with pre-drilled holes for placement of anchors.
F. Finish of Cabinet Exterior Trim and Door: Baked enamel, White color.
G. Finish of Cabinet Interior: White colored enamel.

2.3 ACCESSORIES

A. Lettering: “FIRE EXTINGUISHER” decal, or vinyl self-adhering, prespaced black lettering in accordance with authorities having jurisdiction (AHJ).

PART 3 EXECUTION

3.1 INSTALLATION

A. Install in accordance with manufacturer's instructions.
B. Install cabinets plumb and level in wall openings, 48 inches from finished floor to operable handle.
C. Place extinguishers in cabinets.

END OF SECTION

SECTION 10 7313 - AWNINGS

PART 1 GENERAL

1.1 SECTION INCLUDES

A. Metal awnings.

1.2 SUBMITTALS

A. See Section 01 3000 - Administrative Requirements for submittal procedures.
B. Metal Product Data: Product data sheets, including material descriptions and finishes, and preparation instructions and recommendations.
C. Shop Drawings: Indicate awning profiles, sizes, connection attachments, anchorage, size and type of fasteners, accessories and locations.
D. Selection Samples: Manufacturer's color charts for metal framing and awning panel colors and finishes with corresponding RAL numbers.
E. Designer's qualification statement.
F. Manufacturer's qualification statement.
G. Executed warranty.
H. Specimen warranty.

1.3 QUALITY ASSURANCE

A. Designer Qualifications: Perform design under direct supervision of Professional Engineer experienced in design of this type of work and licensed in Missouri.
B. Manufacturer Qualifications: Company specializing in manufacturing products specified in this section, with at least three years of documented experience.

1.4 WARRANTY

A. See Section 01 7800 - Closeout Submittals for additional warranty requirements.
B. Finish Warranty: Provide five-year manufacturer warranty against excessive degradation of factory-applied finishes. Include provision for replacement of units with excessive fading, chalking, or flaking. Complete forms in Owner's name and register with warrantor.

PART 2 PRODUCTS

2.1 MANUFACTURERS

A. Fixed Fabric Awnings:
B. Metal Awnings:
    1. Lawrence Fabric and Metal Structures.
    2. Substitutions: See Section 01 6000 - Product Requirements.

2.2 AWNINGS - GENERAL

A. Design Criteria: Comply with local building codes.
B. Configuration: As indicated on drawings.

2.3 METAL AWNINGS

A. Type: Face-mounted.
B. Size: As indicated on drawings.
C. Material: Extruded aluminum, alloy 6063-T6.
D. Fabrication: Welded and Mechanically Fastened.
E. Fascia: G-style gutter fascia.
    1. Welded as one piece or in sections as required for width of canopy.
    2. Profile: 8 inches and 12 inches. See drawings for locations.
F. Decking: Corrugated Sheet.

G. WaterDispersal: Include Scuppers and internal gutter / drainage. Indicate scuppers on shop drawings for approval.
H. Support: 1" Aluminum Rod supports
I. Finishes: AAMA 2604 Compliant Powder Coat Finish

2.4 FABRICATION - FRAMING

A. Fit and shop assemble components in largest practical sizes, for delivery to site.
B. Fabricate components with joints tightly fitted and secured.
C. Exposed Fastenings: Unobtrusively located; consistent with design of component, except where specifically noted otherwise.
D. Supply components required for anchorage of framing. Fabricate anchors and related components of same material and finish as framing, except where specifically noted otherwise.
E. Continuously seal joined pieces by intermittent welds and plastic filler.
F. Accurately form components to suit each other and to building structure.

2.5 FINISHES

A. Finish Color: As selected by Architect from manufacturer's standard range.

PART 3 EXECUTION

3.1 EXAMINATION

A. Verify that wall substrate anchors are acceptable and are ready to receive work.

3.2 INSTALLATION - FRAMING

A. Install in accordance with manufacturer's instructions.
B. Install components plumb and level, accurately fitted, free from distortion or defects.
C. Provide anchors required for connecting framing to structure. Anchor framing to structure.
D. Conceal bolts and screws whenever possible. Where not concealed, use flush countersunk fastenings.

3.3 TOLERANCES

A. Maximum Variation From Plumb: 1/4 inch per story, non-cumulative.
B. Maximum Misalignment From True Position: 1/4 inch.

END OF SECTION

SECTION 10 7500 - FLAGPOLES

PART 1 GENERAL

1.1 SECTION INCLUDES

A. Aluminum Flagpoles.

1.2 REFERENCE STANDARDS

A. ASTM B241/B241M - Standard Specification for Aluminum and Aluminum-Alloy Seamless Pipe and Seamless Extruded Tube.

B. NAAMM FP 1001 - Guide Specifications for Design Loads of Metal Flagpoles.

1.3 SUBMITTALS

A. See Section 01 3000 - Administrative Requirements, for submittal procedures.

B. Product Data: Provide data on pole, accessories, and configurations.

C. Shop Drawings: Indicate detailed dimensions, base details, anchor requirements, and imposed loads.

1.4 DELIVERY, STORAGE, AND HANDLING

A. Spiral wrap flagpole with protective covering and pack in protective shipping tubes or containers.

B. Protect flagpole and accessories from damage or moisture.

PART 2 PRODUCTS

2.1 FLAGPOLES

A. Flagpoles: Designed in accordance with NAAMM FP 1001

1. Material: Aluminum.
2. Design: Cone tapered.
3. Mounting: Ground mounted type.
4. Nominal Height: 30 ft and 25 ft; measured from nominal ground elevation.
5. Halyard: Internal type, manual winch operation with lockable access door.

2.2 POLE MATERIALS

A. Aluminum: ASTM B241/B241M , 6063 alloy , T6 temper.

2.3 FINISHING

A. Metal Surfaces in Contact With Concrete: Asphaltic paint.

B. Aluminum: Mill finish.

PART 3 EXECUTION

3.1 EXAMINATION

A. Verify that concrete foundation is ready to receive work and dimensions are as indicated on shop drawings.

3.2 INSTALLATION

A. Install flagpole , base assembly, and fittings in accordance with manufacturer's instructions.

B. Install foundation plate and centering wedges for flagpoles base set in concrete base and fasten.

3.3 ADJUSTING

A. Adjust operating devices so that halyard and flag function smoothly.

END OF SECTION

SECTION 11 3013 - RESIDENTIAL APPLIANCES

PART 1 GENERAL

1.1 SECTION INCLUDES

A. Kitchen appliances.

1.2 RELATED REQUIREMENTS

A. Section 26 0583 - Wiring Connections: Electrical connections for appliances.

1.3 SUBMITTALS

A. See Section 01 3000 - Administrative Requirements, for submittal procedures.
B. Product Data: Manufacturer's data indicating dimensions, capacity, and operating features of each piece of residential equipment specified.
C. Copies of Warranties: Submit manufacturer warranty and ensure that forms have been completed in Owner's name and registered with manufacturer.

1.4 WARRANTY

A. See Section 01 7800 - Closeout Submittals, for additional warranty requirements.
B. Provide five (5) year manufacturer warranty on refrigeration system of refrigerators.
C. Provide ten (10) year manufacturer warranty on magnetron tube of microwave ovens.
D. Provide ten (10) year manufacturer warranty on tub and door liner of dishwashers.

PART 2 PRODUCTS

2.1 KITCHEN APPLIANCES

A. Provide Equipment Eligible for Energy Star Rating: Energy Star Rated.
B. Refrigerator: Free-standing, French Door with bottom freezer door, Counter depth, and frost-free. (Break Room)
   1. Capacity: Total minimum storage of 20 cubic ft; minimum 15 percent freezer capacity.
   2. Energy Usage: Minimum 20 percent more energy efficient than energy efficiency standards set by U.S. Department of Energy (DOE).
   3. Features: Include glass shelves, automatic icemaker, light in freezer compartment, and in-door water and ice dispenser.
   4. Exterior Finish: Fingerprint-Resistant Stainless Steel.
   5. ADA Compliant
   6. Manufacturers:
      a. GE Appliances; Model PYE22KYNFS: www.geappliances.com/#sle.
      b. Substitutions: See Section 01 6000 - Product Requirements.
C. Refrigerator: Free-Standing, Single door, and Frost Free (Evidence).
   1. Capacity: Total minimum storage of 11.4 cubic feet; convertible from refrigerator to freezer temperatures.
   2. Energy Usage: Energy Star Certification required.
   3. Features: Include Removable drawers, glass shelves, and light in fridge compartment.
   4. Exterior Finish: Stainless Steel.
   5. Manufacturers:
      a. Samsung Appliances; Model RZ11M7074SA.
      b. Substitutions: See Section 01 6000 - Product Requirements.
D. Range: Electric, free-standing, with glass-ceramic cooktop.
   1. Size: 30 inches wide.
   2. Oven: Self-cleaning with electronic ignition.
   3. Elements: Five (5).

4. Controls: Solid state electronic.
5. Features: Include storage drawer, oven door window, broiler pan and grid, and oven light.
6. Exterior Finish: Stainless steel.
7. ADA Compliant
8. Manufacturers:
    a. GE Appliances; Model GRS600AVFS: www.geappliances.com/#sle.

E. Microwave: Over-the-range.
1. Capacity: 1.5 cubic ft.
2. Power: 1000 watts.
3. Features: Include turntable, cooktop light, night light, 2-speed exhaust fan, and undercabinet mounting kit.
4. Exterior Finish: Stainless Steel.
5. Manufacturers:
    a. GE Appliances; Model JVM7195SKSS: www.geappliances.com/#sle.

F. Waste Disposer: Standard type, overload protection, direct wired, dishwasher connection, drain elbow and drain connector.
1. Power: 1/3 HP.
2. Capacity: Large.
3. Height: 14-1/2 inch.
4. Depth: 8-1/2 inch.
5. Controls: Wall switch.
6. Voltage: 115 volts, 60 Hz, 4 amps.

G. Dishwasher: Undercounter.
1. Controls: Solid state electronic.
2. Wash Levels: Three (3).
3. Cycles: Six (6), including normal, rinse and hold, short, china/crystal, and pot and pan.
4. Features: Include rinse aid dispenser, optional no-heat dry, optional water temperature boost, adjustable upper rack, and adjustable lower rack.
5. Finish: Porcelain enameled steel , color as indicated.
6. Manufacturers:
    a. GE Appliances; Model GDT226SSLSS: www.geappliances.com/#sle.
    b. Substitutions: See Section 01 6000 - Product Requirements.

H. Ice Maker: Freestanding.
1. Storage Capacity: 60 lbs minimum.
2. Features: Include ice scoop, drain hose, filter and hose, adjustable feet, and a drain hose.
3. Finish: Stainless Steel.
4. Manufacturers:
    a. Tittla; Model TA-HY126EF.
    b. Substitutions: See Section 01 6000 - Product Requirements.

PART 3 EXECUTION

3.1 EXAMINATION

A. Verify utility rough-ins are provided and correctly located.

3.2 INSTALLATION

A. Install in accordance with manufacturer's instructions.
B. Anchor built-in equipment in place.

3.3 CLEANING

A. Remove packing materials from equipment and properly discard.

B. Wash and clean equipment.

END OF SECTION

SECTION 11 5300 - LABORATORY EQUIPMENT

PART 1 GENERAL

1.1 SECTION INCLUDES

A. Contractor-furnished laboratory equipment including CFOI equipment installed by Owner.
B. Installation of Contractor-furnished (CFCI) equipment.
C. Installation of Owner-furnished (OFCI) equipment.
D. Coordination with Owner-furnished Owner-installed (OFOI) equipment.

1.2 ABBREVIATIONS AND ACRONYMS

A. OFOI - Owner Furnishes and Owner Installs.
B. CFOI - Contractor Furnishes and Owner Installs.
C. OFCI - Owner Furnishes and Contractor Installs.
D. CFCI - Contractor Furnishes and Contractor Installs.

1.3 REFERENCE STANDARDS

A. ASME BPVC - Boiler and Pressure Vessel Code.
B. ASTM A240/A240M - Standard Specification for Chromium and Chromium-Nickel Stainless Steel Plate, Sheet, and Strip for Pressure Vessels and for General Applications.
C. ASTM A653/A653M - Standard Specification for Steel Sheet, Zinc-Coated (Galvanized) or Zinc-Iron Alloy-Coated (Galvannealed) by the Hot-Dip Process.
D. ASTM A666 - Standard Specification for Annealed or Cold-Worked Austenitic Stainless Steel Sheet, Strip, Plate, and Flat Bar.
E. ASTM B209/B209M - Standard Specification for Aluminum and Aluminum-Alloy Sheet and Plate.
F. ASTM C1172 - Standard Specification for Laminated Architectural Flat Glass.
G. NAAMM AMP 500-06 - Metal Finishes Manual.
H. NFPA 70 - National Electrical Code.
I. SMACNA (SRM) - Seismic Restraint Manual Guidelines for Mechanical Systems.

1.4 SUBMITTALS

A. See Section 01 3000 - Administrative Requirements, for submittal procedures.
B. Product Data: Provide equipment dimensions and construction; equipment capacities; physical dimensions; utility and service requirements, clearances, and locations; required accessories and optional features; point loads.
C. Shop Drawings: Indicate equipment locations, large scale plans, elevations, cross sections, rough-in and anchor placement dimensions and tolerances, installation and servicing clearances required.
D. Maintenance Data: Identify system maintenance requirements, servicing cycles, lubrication types required and local spare part sources.
E. Warranty Documentation: Submit manufacturer warranty and ensure that forms have been completed in Owner's name and registered with manufacturer.

1.5 WARRANTY

A. See Section 01 7800 - Closeout Submittals, for additional warranty requirements.

PART 2 PRODUCTS

2.1 MANUFACTURERS

A. Evidence Drying Cabinets; Property Processing 162:
   1. SafeKeeper Forensic Evidene Drying Cabinet; Model FDC-010-A.
   2. Substitutions: See Section 01 6000 - Product Information.
B. Ductless Fume Hood; Bulk Temporary Storage 163:
   1. EDU-Junior Ductless Fume Hood; Model P5-24-X-CART-A.

2. Substitutions: See Section 01 6000 - Product Information.

C. Pre-fabricated Faraday Tent; Dare Storage 133:
1. Concentric Technology Solutions; Model FD14034.
2. Subtitutions: See Section 01 6000 - Product Information.

D. Stainless Steel Work Table; Property Processing 162:
1. Metro Tableworx 304 Stainless Steel 30" x 72" Mobile Table; Model WBB3184196.
a. Include two (2) Nexel Stainless Steel Drawers (15 inches wide by 20 inches deep); Model WB319129.
2. Substitutions: See Section 01 6000 - Product Information.

E. Stainless Steel Work Table; Secure Processing 164.
1. Global Industrial Mobile Stainless Steel Instrument Table, 48" x 24" with Undershelf; Model WBB529964.
a. Include one (1) Nexel Stainless Steel Drawer (15 inches by 20 inches deep); Model WB319129.
2. Substitutions: See Section 01 6000 - Product Information.

2.2 EQUIPMENT

A. Owner furnishes and installs equipment noted as OFOI.
B. Owner furnishes and Contractor installs equipment noted as OFCI.
C. Contractor furnishes and installs equipment noted as CFCI.
D. Each item energized by a single switch.
E. Prewire and prepipe each unit of equipment complete with trim and fittings. Include reduced pressure or atmospheric type backflow preventer fitting to prevent backflow of polluted water or waste into water supply system or equipment. Comply with applicable code requirements.
F. Installation Accessories: Provide all rough-in frames, anchors, supports, accessories and closure trim required for complete installation.
G. Use corrosion-resistant materials for all rivets, bolts, nuts, studs, spacers, and welding metal.
H. Fully assemble equipment in factory, except for those items which cannot be moved to their final locations as single item due to new construction space restrictions.

2.3 MATERIALS

A. Aluminum Sheet: ASTM B209/B209M, 5005-H32 minimum; alloy and temper recommended by aluminum producer and finisher for use and finish indicated.
B. Galvanized Steel Sheet: ASTM A653/A653M, G90 (Z275) coating.
C. Stainless-Steel Sheet: ASTM A240/A240M or ASTM A666, Type 304 and 316, stretcher-leveled standard of flatness.
D. Laminated Safety Glass: ASTM C1172
E. Electrical Components, Devices, and Accessories: Listed and labeled as defined in NFPA 70, by a qualified testing agency, and marked for intended location and application.
F. Fasteners: Stainless-steel, or other corrosion-resistant materials, standard with the manufacturer.
G. Welding Materials: Comply with ASME BPVC SEC II-C.
H. Metal Finishes: Comply with NAAMM AMP 500-06.

PART 3 EXECUTION

3.1 EXAMINATION

A. Verify that utility connections, rough-in frames, anchors and supports are accurately placed and deliver building services at specified characteristics and/or within acceptable functional ranges.
B. Examine areas, with Installer present, for compliance with requirements for installation tolerances and other conditions affecting performance of equipment.

3.2 INSTALLATION

A. Install in accordance with manufacturer's instructions.
B. Large Components: Ensure that large components can be moved into final position without damage to other construction.
C. Mounting: Anchor equipment securely in place.
   1. Mount equipment in compliance with SMACNA (SRM) requirements.
D. Touch-up minor damaged surfaces caused during installation. Replace damaged components as directed by Architect.

3.3 ADJUSTING

A. Adjust operating equipment to efficient operation.

3.4 CLOSEOUT ACTIVITIES

A. See Section 01 7800 - Closeout Submittals, for closeout submittals.
B. Demonstrate proper operation of equipment to Owner's designated representative.
C. Final Acceptance: Remove labels, fingerprints, and clean all surfaces both inside and out. Repair any marred or damaged surfaces that affect appearance, such as both interior and exterior of cabinets in a manner acceptable to Owner. Replace any parts that cannot be repaired in such a manner.

END OF SECTION

SECTION 11 6623 - GYMNASIUM EQUIPMENT

PART 1 GENERAL

1.1 SECTION INCLUDES

A. Wall mounted protection pads.

1.2 REFERENCE STANDARDS

A. ASTM E84 - Standard Test Method for Surface Burning Characteristics of Building Materials.

1.3 SUBMITTALS

A. See Section 01 3000 - Administrative Requirements, for submittal procedures.

B. Product Data: Provide manufacturer's data showing configuration, sizes, materials, finishes, hardware, and accessories; include:

1. Fire rating certifications.
2. Manufacturer's installation instructions.

C. Shop Drawings: For custom fabricated equipment indicate, in large scale detail, construction methods; method of attachment or installation; hardware, and fittings; plan front elevation; elevations and dimensions; minimum one cross section; utility requirements as to types, sizes, and locations.

PART 2 PRODUCTS

2.1 GENERAL REQUIREMENTS

A. See drawings for sizes and locations, unless noted otherwise.

B. Provide mounting plates, brackets, and anchors of sufficient size and strength to securely attach equipment to building structure; comply with requirements of Contract Documents.

C. Hardware: Heavy duty steel hardware, as recommended by manufacturer.

2.2 WALL PADDING

A. Wall Padding: Foam filling bonded to backing board, wrapped in covering; each panel fabricated in one piece.

1. Surface Burning Characteristics: Flame spread index (FSI) of 25 or less, smoke developed index (SDI) of 450 or less, Class A, when tested in accordance with ASTM E84 as a complete panel.
2. Covering: Vinyl-coated polyester fabric, mildew and rot resistant; stapled to back of board.
   a. Color: As selected from manufacturer's standard range.
   b. Texture: Embossed leather-look.
   c. Fabric Weight: 14 oz/sq yd, minimum.
3. Foam, Fire-Rated: Open cell polychloroprene (Neoprene), with 5.5 pcf nominal density.
4. Foam Thickness: 1-1/2 inches.
5. Backing Board: Plywood.
   a. Thickness: 7/16 inch, minimum.
6. Fastening Margins: 1 inch wide, covered by fabric covering.
7. Mounting: Removable; Z-clips fixed to wall and to padding.

B. Specially Shaped Padding: Same construction as standard padding; custom fabricate to fit irregularly shaped members, areas, and protrusions in gymnasium as indicated; provide padding for:

1. Columns.
2. Wall corners.

PART 3 EXECUTION

3.1 EXAMINATION

A. Take field measurements to ensure proper fitting of work. If taking field measurements before fabrication will delay work, allow for adjustments within recommended tolerances.

B. Inspect areas and conditions before installation, and notify Architect in writing of unsatisfactory or detrimental conditions.
C. Do not proceed with this work until conditions have been corrected; commencing installation constitutes acceptance of work site conditions.

3.2 INSTALLATION

A. Install in accordance with Contract Documents and manufacturer's instructions.
B. Install equipment rigid, straight, plumb, and level.
C. Secure equipment with manufacturer's recommended anchoring devices.
D. Install wall padding securely, with edges tight to wall and without wrinkles in fabric covering.
E. Separate dissimilar metals to prevent electrolytic corrosion.

3.3 ADJUSTING

A. Verify proper placement of equipment.
B. Verify proper placement of equipment anchors and sleeves, and use actual movable equipment to be anchored if available.

3.4 CLEANING

A. Remove masking or protective covering from finished surfaces.
B. Clean equipment in accordance with manufacturer's recommendations.

3.5 PROTECTION

A. Protect installed products until Date of Substantial Completion.
B. Replace damaged products before Date of Substantial Completion.

END OF SECTION

SECTION 12 2400 - WINDOW SHADES

PART 1 GENERAL

1.1 SECTION INCLUDES

A. Interior manual roller shades.
B. Interior motorized roller shades.
C. Motor controls.

1.2 RELATED REQUIREMENTS

A. Section 06 1000 - Rough Carpentry: Concealed wood blocking for attachment of headrail brackets.

1.3 REFERENCE STANDARDS

A. NFPA 70 - National Electrical Code.
B. NFPA 701 - Standard Methods of Fire Tests for Flame Propagation of Textiles and Films.
C. UL 325 - Standard for Door, Drapery, Gate, Louver, and Window Operators and Systems.
D. WCMA A100.1 - Standard for Safety of Window Covering Products.

1.4 ADMINISTRATIVE REQUIREMENTS

A. Coordination:
   1. Where motorized shades are to be controlled by control systems provided under other sections, coordinate the work with other trades to provide compatible products.
   2. Coordinate the work with other trades to provide rough-in of electrical wiring as required for installation of hardwired motorized shades.
B. Sequencing:
   1. Do not fabricate shades until field dimensions for each opening have been taken with field conditions in place.
   2. Do not install shades until final surface finishes and painting are complete.

1.5 SUBMITTALS

A. See Section 01 3000 - Administrative Requirements, for submittal procedures.
B. Product Data: Provide manufacturer's standard catalog pages and data sheets, including materials, finishes, fabrication details, dimensions, profiles, mounting requirements, and accessories.
   1. Motorized Shades: Include power requirements and standard wiring diagrams for specified products.
C. Shop Drawings: Include shade schedule indicating size, location and keys to details, head, jamb and sill details, mounting dimension requirements for each product and condition, and operation direction.
D. Certificates: Manufacturer's documentation that line voltage components are UL listed or UL recognized.
E. Verification Samples: Minimum size 6 inches square, representing actual materials, color and pattern.
F. Manufacturer's Instructions: Include instructions for storage, handling, protection, examination, preparation, and installation of product.
G. Operation and Maintenance Data: List of all components with part numbers, sources of supply, and operation and maintenance instructions; include copy of shop drawings.
H. Warranty: Submit sample of manufacturer's warranty and documentation of final executed warranty completed in Owner's name and registered with manufacturer.
I. Maintenance contracts.
J. Closeout Submittals: Maintenance Data for window treatments to include Maintenance Manuals.

1.6 QUALITY ASSURANCE

A. Manufacturer Qualifications: Company specializing in manufacturing products specified in this section, with not less than five years of documented experience.
B. Installer Qualifications: Company specializing in performing work of this type with minimum 3 years of experience with shading systems of similar size and type.

1.7 DELIVERY, STORAGE, AND HANDLING

A. Deliver shades in manufacturer's unopened packaging, labeled to identify each shade for each opening.
B. Handle and store shades in accordance with manufacturer's recommendations.

1.8 FIELD CONDITIONS

A. Do not install products under environmental conditions outside manufacturer's absolute limits.

1.9 WARRANTY

A. See Section 01 7800 - Closeout Submittals, for additional warranty requirements.
B. Provide manufacturer's warranty from Date of Substantial Completion, covering the following:
   1. Shade Hardware: Limited Lifetime.
   2. Electric Motors: Five years.
   3. Electronic Control Equipment: Five years.
   4. Fabric: Limited Lifetime

PART 2 PRODUCTS

2.1 MANUFACTURERS

A. Interior Manually Operated Roller Shades:
   1. MechoShade Systems LLC; Mecho/7 System: www.mechoshade.com/#sle.
   2. SWFcontract, a division of Springs Window Fashions, LLC.; Pro Series Manual Solar Shade System: www.swfcontract.com/#sle.
   3. Substitutions: See Section 01 6000 - Product Requirements.
B. Interior Motorized Roller Shades, Motors and Motor Controls:
   1. MechoShade Systems LLC; UrbanShade Single Roller - Motorized: www.mechoshade.com/#sle.
   2. SWFcontract, a division of Springs Window Fashions, LLC; Intelligent Motorized Roller Shades : www.swfcontract.com/#sle.
   3. Substitutions: See Section 01 6000 - Product Requirements.

2.2 ROLLER SHADES

A. General:
   1. Provide shade system components that are easy to remove or adjust without removal of mounted shade brackets.
   2. Provide shade system that operates smoothly when shades are raised or lowered.
   3. Motorized Shades: Motor system enclosed in roller tube, controlling shade movement via motor controls indicated; listed or recognized to UL 325 tip to tip.
      a. Comply with NFPA 70.
      b. Electrical Components: Listed, classified, and labeled as suitable for the purpose intended. Where applicable, system components to be FCC compliant.
      c. Motors: Size and configuration as recommended by manufacturer for the type, size, and arrangement of shades to be operated; integrated into shade operating components and concealed from view; fully compatible with controls to be installed.
      d. Audible Noise: Maximum 40 dBA measured 3 feet from the motor unit; no audible clicks when motor starts and stops.
B. Interior Roller Shades - Manual Operation:
   1. Basis of Design: SWF Contract.
   2. Description - Interior Roller Shades: Single roller, manually operated fabric window shade system complete with mounting brackets, roller tubes, hembars, hardware, and accessories.
      a. Drop Position: Regular roll.
      b. Roll Direction: Roll down, closed position is at window sill.
      c. Mounting: Ceiling mounted.
      d. Size: As indicated on drawings.

e. Fabric: As indicated on drawings
3. Brackets and Mounting Hardware: As recommended by manufacturer for mounting indicated and to accommodate shade fabric roll-up size and weight.
4. Roller Tubes: As required for type of shade operation.
   a. Material: Extruded aluminum, clear anodized finish.
   b. Size: As recommended by manufacturer; selected for suitability for installation conditions, span, and weight of shades.
   c. Fabric Attachment: Utilize extruded channel in tube to accept vinyl spline welded to fabric edge.
5. Hembars: Designed to maintain bottom of shade straight and flat.
   a. Style: Full wrap fabric covered bottom bar, flat profile with heat sealed closed ends.
6. Manual Operation for Interior Shades:
   a. Clutch Operator: Manufacturer's standard material and design, permanently lubricated.
   b. Drive Chain: Continuous loop, beaded ball chain with restraining device, 95 lb minimum breaking strength; comply with WCMA A100.1. Provide upper and lower limit stops.
   c. Chain Retainer:
      1) Manufacturer's standard clip. Clear or Black in color.
7. Accessories:
   a. Fascia: Extruded aluminum, size as required to conceal shade mounting, attachable to brackets without exposed fasteners; Black.
      1) Color: Black.
      2) Profile: Square.

C. Interior Roller Shades - Motorized Operation.
1. Description: Single roller, motor-operated fabric window shade system complete with mounting brackets, roller tubes, hembars, hardware, and other components necessary for complete installation.
   a. Drop Position: Regular roll.
   b. Mounting: Wall mounted.
   c. Size: As indicated on drawings.
   d. Fabric: As indicated under Shade Fabric article.
2. Mounting Hardware: As recommended by manufacturer for mounting indicated and to accommodate shade fabric roll-up size and weight.
3. Roller Tubes: As required for type of shade operation; designed for removal without removing mounting hardware.
   a. Material: Extruded aluminum or steel, with wall thickness and material selected by manufacturer.
   b. Size: As recommended by manufacturer; selected for suitability for installation conditions, span, and weight of shades.
   c. Fabric Attachment: Utilize double-sided adhesive tape.
   d. Capable of being removed and reinstalled without affecting roller shade limit adjustments.
4. Hembars: Designed to maintain bottom of shade straight and flat, selected from manufacturer's standard options.
5. Shade Motor: Standard 120V AC motor, located on right side facing window from inside (standard).
   a. Equipped with 18 inch motor lead with quick disconnect.
6. Accessories:
   a. Fascia: Extruded aluminum, size as required to conceal shade mounting, attachable to mounting end caps, without exposed fasteners; powder coat finish.
      1) Color: Black.

b. Fasteners: Noncorrosive, and as recommended by shade manufacturer.

2.3 SHADE FABRIC

A. Fabric: Nonflammable, color-fast, impervious to heat and moisture, and able to retain its shape under normal operation.
   1. Manufacturers:
      a. SWF Contract Crosshatch R Series.
      b. Substitutions: See Section 01 6000 - Product Requirements.
   2. Material: Vinyl coated polyester.
   3. Openness Factor: 3% and 5% - Refer to Reflected Ceiling Plan for locations.
   4. Roll Width: 126 inches, maximum. Joints in shades must occur on storefront mullions.
   5. Color: Ebony/Stone.

2.4 MOTOR CONTROLS

A. Unless specifically indicated to be excluded, provide all required equipment, conduit, boxes, wiring, connectors, hardware, supports, accessories, software, system programming, etc. as necessary for a complete operating system that provides the control intent indicated.
B. Provide all components and connections necessary to interface with other systems as indicated.
C. Local Controls:
   1. Control Functions:
      a. Open: Automatically open controlled shade(s) to fully open position when button is pressed.
      b. Close: Automatically close controlled shade(s) to fully closed position when button is pressed.
      c. Raise: Raise controlled shade(s) only while button is pressed.
      d. Lower: Lower controlled shade(s) only while button is pressed.
      e. Multiple Shade Groups: Provide individual controls for each shade group in a single storefront unit.
   2. Wall Controls: Provided by shade manufacturer.
      a. Finish: To be selected by Architect.
      b. Button Engraving: Manufacturer's standard engraving, unless otherwise indicated.
      c. SDN Keypads (wired) single gang, 6 or 8 buttons, fully programmable.
      d. Location: Field locate with approval from Architect and Owner in the Clerks office (Room 110) or in adjacent hallway, and in the Breakroom (Room 146). Location should be easily accessible and should have direct views to all shades it controls.

PART 3 EXECUTION

3.1 EXAMINATION

A. Examine finished openings for deficiencies that may preclude satisfactory installation.
B. If substrate preparation is the responsibility of another installer, notify Architect of unsatisfactory preparation before proceeding.
C. Start of installation shall be considered acceptance of substrates.

3.2 PREPARATION

A. Prepare surfaces using methods recommended by manufacturer for achieving best result for substrate under the project conditions.
B. Coordinate with window installation and placement of concealed blocking to support shades.

3.3 INSTALLATION

A. Install in accordance with manufacturer's instructions and approved shop drawings, using mounting devices as indicated.
B. Replace shades that exceed specified dimensional tolerances at no extra cost to Owner.

C. Adjust level, projection, and shade centering from mounting bracket. Verify there is no telescoping of shade fabric. Ensure smooth shade operation.

3.4 SYSTEM STARTUP

A. Motorized Shade System: Provide services of a manufacturer's authorized representative to perform system startup.

3.5 CLEANING

A. Clean soiled shades and exposed components as recommended by manufacturer.
B. Replace shades that cannot be cleaned to "like new" condition.
C. See Section 01 7419 - Construction Waste Management and Disposal for additional requirements.

3.6 CLOSEOUT ACTIVITIES

A. See Section 01 7800 - Closeout Submittals, for closeout submittals.
B. Training: Train Owner's personnel on operation and maintenance of system.
   1. Use operation and maintenance manual as training reference, supplemented with additional training materials as required.
   2. Provide minimum of two hours training by manufacturer's authorized personnel at location designated by the Owner.

3.7 PROTECTION

A. Protect installed products from subsequent construction operations.
B. Touch-up, repair, or replace damaged products before Substantial Completion.

END OF SECTION

SECTION 12 3600 - COUNTERTOPS

PART 1 GENERAL

1.1 SECTION INCLUDES

A. Countertops for architectural cabinet work.
B. Wall-hung counters and vanity tops.

1.2 REFERENCE STANDARDS

A. ASTM A666 - Standard Specification for Annealed or Cold-Worked Austenitic Stainless Steel Sheet, Strip, Plate, and Flat Bar.
B. ASTM E84 - Standard Test Method for Surface Burning Characteristics of Building Materials.
C. AWI/AWMAC/WI (AWS) - Architectural Woodwork Standards, 2nd Edition.
D. AWMAC/WI (NAAWS) - North American Architectural Woodwork Standards, U.S. Version 3.1.
E. ISFA 2-01 - Classification and Standards for Solid Surfacing Material.
F. NEMA LD 3 - High-Pressure Decorative Laminates.
G. PS 1 - Structural Plywood.

1.3 SUBMITTALS

A. See Section 01 3000 - Administrative Requirements for submittal procedures.
B. Product Data: Manufacturer's data sheets on each product to be used, including:
   1. Preparation instructions and recommendations.
   2. Storage and handling requirements and recommendations.
   3. Specimen warranty.
C. Shop Drawings: Complete details of materials and installation ; combine with shop drawings of cabinets and casework specified in other sections.
   1. Manufacturer must include all countertop seams on shop drawings and arrows indicating directional materials.
D. Verification Samples: For each finish product specified, minimum size 6 inches square, representing actual product, color, and patterns.
E. Test Reports: Chemical resistance testing, showing compliance with specified requirements.

1.4 QUALITY ASSURANCE

A. Installer Qualifications: Company specializing in performing work of the type specified in this section, with not less than three years of documented experience.

1.5 DELIVERY, STORAGE, AND HANDLING

A. Store products in manufacturer's unopened packaging until ready for installation.
B. Store and dispose of solvent-based materials, and materials used with solvent-based materials, in accordance with requirements of local authorities having jurisdiction.

1.6 FIELD CONDITIONS

A. Maintain environmental conditions (temperature, humidity, and ventilation) within limits recommended by manufacturer for optimum results. Do not install products under environmental conditions outside manufacturer's absolute limits.

PART 2 PRODUCTS

2.1 COUNTERTOPS

A. Quality Standard: Custom Grade, in accordance with AWI/AWMAC/WI (AWS) or AWMAC/WI (NAAWS), unless noted otherwise.
B. Plastic Laminate Countertops: High-pressure decorative laminate (HPDL) sheet bonded to substrate.
   1. Laminate Sheet: NEMA LD 3, Grade HGS, 0.048 inch nominal thickness.
      a. Manufacturers:

1) Formica Corporation: www.formica.com/#sle.
2) Lamin-Art, Inc: www.laminart.com/#sle.
3) Wilsonart: www.wilsonart.com/#sle.
4) Substitutions: See Section 01 6000 - Product Requirements.

b. Surface Burning Characteristics: Flame spread index of 25, maximum; smoke developed index of 450, maximum; when tested in accordance with ASTM E84.

c. Wear Resistance: In addition to specified grade, comply with NEMA LD 3 High Wear Grade requirements for wear resistance.

2. Back and End Splashes: Same material, same construction.

C. Solid Surfacing Countertops: Solid surfacing sheet or plastic resin casting over continuous substrate.

1. Flat Sheet Thickness: 1/2 inch, minimum.
2. Solid Surfacing Sheet and Plastic Resin Castings: Complying with ISFA 2-01 and NEMA LD 3; acrylic or polyester resin, mineral filler, and pigments; homogenous, non-porous and capable of being worked and repaired using standard woodworking tools; no surface coating; color and pattern consistent throughout thickness.

a. Manufacturers:

1) Formica Corporation: www.formica.com/#sle.
2) Corian Solid Surfaces: www.corian.com/#sle.
3) Substitutions: See Section 01 6000 - Product Requirements.

b. Surface Burning Characteristics: Flame spread index of 25, maximum; smoke developed index of 450, maximum; when tested in accordance with ASTM E84.

c. Finish on Exposed Surfaces: Matte, gloss rating of 5 to 20.

d. Color and Pattern: As indicated on drawings.

3. Other Components Thickness: 1/2 inch, minimum.
4. Back and End Splashes: Same sheet material, square top; minimum 4 inches high.
5. Fabricate in accordance with AWI/AWMAC/WI (AWS) or AWMAC/WI (NAAWS), Section 11 - Countertops, Premium Grade.

D. Stainless Steel Countertops: , Type 304, stainless steel sheet; 16 gauge, 0.0625 inch nominal sheet thickness.

1. Finish: 4B satin brushed finish.
2. Edge and Backsplash Sink Details: As indicated on drawings.
3. Exposed Edge Shape: Marine edge with return; edge raised 3/16 inch above counter with 45 degree transition, minimum 1 inch flat rim; 1-1/2 inch high turndown, 1/2 inch return to face of case; reinforced with hardwood or steel.
4. Back and End Splashes: Same material; welded 1/4 inch radius coved joint to countertop; square top edge with 1 inch wide top surface and minimum 1/2 inch turndown.
5. Splash Dimensions: 4 inch high by 1 inch thick, unless otherwise indicated.

2.2 MATERIALS

A. Wood-Based Components:

1. Wood fabricated from old growth timber is not permitted.

B. Plywood for Supporting Substrate: PS 1 Exterior Grade, A-C veneer grade, minimum 5-ply; minimum 3/4 inch thick; join lengths using metal splines.

C. Adhesives: Chemical resistant waterproof adhesive as recommended by manufacturer of materials being joined.

D. Joint Sealant: Mildew-resistant silicone sealant, clear.

2.3 FABRICATION

A. Fabricate tops and splashes in the largest sections practicable, with top surface of joints flush.

1. Join lengths of tops using best method recommended by manufacturer.

2. Fabricate to overhang fronts and ends of cabinets 1 inch except where top butts against cabinet or wall.
3. Prepare all cutouts accurately to size; replace tops having improperly dimensioned or unnecessary cutouts or fixture holes.

B. Provide back/end splash wherever counter edge abuts vertical surface unless otherwise indicated.
1. Secure to countertop with concealed fasteners and with contact surfaces set in waterproof glue.
2. Height: 4 inches, unless otherwise indicated.

C. Solid Surfacing: Fabricate tops up to 144 inches long in one piece; join pieces with adhesive sealant in accordance with manufacturer's recommendations and instructions.

D. Stainless Steel: Fabricate tops up to 144 inches long in one piece including nosings and back and end splashes; accurately fitted mechanical field joints in lengths over that dimension are permitted.
1. Weld joints; grind smooth and polish to match.
2. Provide stainless steel hat channel stiffeners, welded or soldered to underside, where indicated on drawings.
3. Provide wall clips for support of back/end splash turndowns.
4. Sound Deadening: Apply water resistant, fire resistant sound deadening mastic to entire bottom surface.

E. Wall-Mounted Counters: Provide skirts, aprons, brackets, and braces as indicated on drawings.

PART 3 EXECUTION

3.1 EXAMINATION

A. Do not begin installation until substrates have been properly prepared.

B. If substrate preparation is the responsibility of another installer, notify Architect of unsatisfactory preparation before proceeding.

C. Verify that wall surfaces have been finished and mechanical and electrical services and outlets are installed in proper locations.

3.2 PREPARATION

A. Clean surfaces thoroughly prior to installation.

B. Prepare surfaces using the methods recommended by the manufacturer for achieving the best result for the substrate under the project conditions.

3.3 INSTALLATION

A. Securely attach countertops to cabinets using concealed fasteners. Make flat surfaces level; shim where required.

B. Attach plastic laminate countertops using screws with minimum penetration into substrate board of 5/8 inch.

C. Attach stainless steel countertops using stainless steel fasteners and clips.

D. Seal joint between back/end splashes and vertical surfaces.

3.4 TOLERANCES

A. Variation From Horizontal: 1/8 inch in 10 feet, maximum.

B. Offset From Wall, Countertops: 1/8 inch maximum; 1/16 inch minimum.

C. Field Joints: 1/8 inch wide, maximum.

3.5 PROTECTION

A. Protect installed products until completion of project.

B. Touch-up, repair or replace damaged products before Date of Substantial Completion.

END OF SECTION

SECTION 13 3419 - METAL BUILDING SYSTEMS

PART 1 GENERAL

1.1 SECTION INCLUDES

A. Manufacturer-engineered, shop-fabricated structural steel building frame.
B. Metal roof panels including gutters and downspouts.

1.2 REFERENCE STANDARDS

A. AISC 360 - Specification for Structural Steel Buildings.
B. ASTM A36/A36M - Standard Specification for Carbon Structural Steel.
C. ASTM A153/A153M - Standard Specification for Zinc Coating (Hot-Dip) on Iron and Steel Hardware.
D. ASTM A307 - Standard Specification for Carbon Steel Bolts, Studs, and Threaded Rod 60 000 PSI Tensile Strength.
E. ASTM A500/A500M - Standard Specification for Cold-Formed Welded and Seamless Carbon Steel Structural Tubing in Rounds and Shapes.
F. ASTM A501/A501M - Standard Specification for Hot-Formed Welded and Seamless Carbon Steel Structural Tubing.
G. ASTM A529/A529M - Standard Specification for High-Strength Carbon-Manganese Steel of Structural Quality.
H. ASTM A653/A653M - Standard Specification for Steel Sheet, Zinc-Coated (Galvanized) or Zinc-Iron Alloy-Coated (Galvannealed) by the Hot-Dip Process.
I. ASTM C920 - Standard Specification for Elastomeric Joint Sealants.
J. ASTM C1107/C1107M - Standard Specification for Packaged Dry, Hydraulic-Cement Grout (Nonshrink).
K. ASTM F3125/F3125M - Standard Specification for High Strength Structural Bolts, Steel and Alloy Steel, Heat Treated, 120 ksi (830 MPa) and 150 ksi (1040 MPa) Minimum Tensile Strength, Inch and Metric Dimensions.
L. AWS A2.4 - Standard Symbols for Welding, Brazing, and Nondestructive Examination.
M. AWS B2.1/B2.1M - Specification for Welding Procedure and Performance Qualification.
N. AWS D1.1/D1.1M - Structural Welding Code - Steel.
O. IAS AC472 - Accreditation Criteria for Inspection Programs for Manufacturers of Metal Building Systems.
P. SSPC-Paint 20 - Zinc-Rich Primers (Type I, "Inorganic," and Type II, "Organic").
Q. UL 580 - Standard for Tests for Uplift Resistance of Roof Assemblies.

1.3 SUBMITTALS

A. See Section 01 3000 - Administrative Requirements for submittal procedures.
B. Product Data: Provide data on profiles, component dimensions, fasteners.
C. Shop Drawings: Indicate assembly dimensions, locations of structural members, connections; wall and roof system dimensions, panel layout, general construction details, anchors and methods of anchorage, and installation; framing anchor bolt settings, sizes, locations from datum, and foundation loads; indicate welded connections with AWS A2.4 welding symbols; indicate net weld lengths; provide professional seal and signature.
D. Manufacturer's Instructions: Indicate preparation requirements, anchor bolt placement.
E. Erection Drawings: Indicate members by label, assembly sequence, and temporary erection bracing.
F. Manufacturer's Qualification Statement: Provide documentation showing metal building manufacturer is accredited under IAS AC472.
    1. Include statement that manufacturer designs and fabricates metal building system as integrated components and assemblies, including but not limited to primary structural members, secondary members, joints, roof, and wall cladding components specifically designed to support and transfer loads and properly assembled components form a complete or partial building shell.
G. Erector's Qualification Statement.

H. Welders' Qualification Statement: Welders' certificates in accordance with AWS B2.1/B2.1M and dated no more than 12 months before start of scheduled welding work.
I. Project Record Documents: Record actual locations of concealed components and utilities.

1.4 QUALITY ASSURANCE

A. Designer Qualifications: Design structural components, develop shop drawings, and perform shop and site work under direct supervision of a Professional Structural Engineer experienced in design of this type of work.
   1. Design Engineer Qualifications: Licensed in Missouri.
   2. Comply with applicable code for submission of design calculations as required for acquiring permits.
   3. Cooperate with regulatory agency or authorities having jurisdiction (AHJ), and provide data as requested.
B. Perform work in accordance with AISC 360 and MBMA (MBSM).
C. Manufacturer Qualifications: Company specializing in the manufacture of products similar to those required for this project.
   1. Not less than three years of documented experience.
D. Erector Qualifications: Company specializing in performing the work of this section approved by manufacturer.

1.5 WARRANTY

A. See Section 01 7800 - Closeout Submittals for additional warranty requirements.
B. Correct defective Work within a five year period after Date of Substantial Completion.
C. Provide five year manufacturer warranty.
   1. Include coverage for exterior pre-finished surfaces to cover pre-finished color coat against chipping, cracking or crazing, blistering, peeling, chalking, or fading. Include coverage for weather tightness of building enclosure elements after installation.

PART 2 PRODUCTS

2.1 BASIS OF DESIGN

A. Metal Buildings Systems:
   1. Poligon Steel Structures; Centelievered monoslope structure.
   2. Substitutions: See Section 01 6000 - Product Requirements.

2.2 ASSEMBLIES

A. Cantilevered Mono-slope.
B. Bay Spacing: 20 ft, maximum. 10 ft, minimum.
C. Primary Framing: Rigid frame of rafter beams and columns and canopy beams.
D. Secondary Framing: Purlins, and other items detailed.
E. Roof Slope: 1/4 inches in 12 inches, minimum.

2.3 PERFORMANCE REQUIREMENTS

A. Design structural members to withstand dead load, applicable snow load, and design loads due to pressure and suction of wind calculated in accordance with applicable code.
B. Provide drainage to exterior for water entering or condensation occurring within wall or roof system.
C. Permit movement of components without buckling, failure of joint seals, undue stress on fasteners or other detrimental effects, when subject to temperature range of ____ degrees F.

2.4 MATERIALS - FRAMING

A. Structural Steel Members: ASTM A36/A36M.
B. Structural Tubing: ASTM A500/A500M Grade B cold-formed.
C. Plate or Bar Stock: ASTM A529/A529M, Grade 50.
D. Anchor Bolts: ASTM A307, Grade A, with hot dip type for protective coatings.

E. Bolts, Nuts, and Washers: ASTM F3125/F3125M, Type 1; galvanized to ASTM A153/A153M.
F. Welding Materials: Perform in accordance with AWS D1.1/D1.1M.
G. Primer: SSPC-Paint 20 zinc rich.
H. Grout: ASTM C1107/C1107M; Non-shrink; premixed compound consisting of non-metallic aggregate, cement, water reducing and plasticizing agents.
   1. Minimum Compressive Strength at 48 Hours: 2,000 pounds per square inch.
   2. Minimum Compressive Strength at 28 Days: 7,000 pounds per square inch.

2.5 MATERIALS - ROOF

A. Steel Sheet: Hot-dipped galvanized steel sheet, ASTM A653/A653M, Designation SS (structural steel), Grade 33 (230), with G90/Z275 coating.
B. Joint Seal Gaskets: Manufacturer's standard type.
C. Fasteners: Manufacturer's standard type, galvanized to comply with requirements of ASTM A153/A153M, finish to match adjacent surfaces when exterior exposed.
D. Sealant: ASTM C920, elastomeric sealant with movement capability of at least plus/minus 50 percent; 100 percent silicone; for exposed applications, match adjacent colors as closely as possible.
E. Trim, Closure Pieces, Caps, Flashings, Gutters, Downspouts, Fascias: Same material, thickness and finish as exterior sheets; brake formed to required profiles.

2.6 FABRICATION - FRAMING

A. Fabricate members in accordance with AISC 360 for plate, bar, tube, or rolled structural shapes.
B. Anchor Bolts: Formed with bent shank, assembled with template for casting into concrete.

2.7 FINISHES

A. Framing Members: Clean, prepare, and shop prime. Do not prime surfaces to be field welded.

PART 3 EXECUTION

3.1 ERECTION - FRAMING

A. Erect framing in accordance with AISC 360.
B. Provide for erection and wind loads. Provide temporary bracing to maintain structure plumb and in alignment until completion of erection and installation of permanent bracing. Locate braced bays as indicated.
C. Set column base plates with non-shrink grout to achieve full plate bearing.
D. Do not field cut or alter structural members without approval.
E. After erection, prime welds, abrasions, and surfaces not shop primed.

3.2 TOLERANCES

A. Framing Members: 1/4 inch from level; 1/8 inch from plumb.
B. Siding and Roofing: 1/8 inch from true position.

END OF SECTION

SECTION 220100 – GENERAL PLUMBING REQUIREMENTS

PART 1 - GENERAL

1.1 RELATED DOCUMENTS

A. Drawings and general provisions of the Contract, including General and Supplementary Conditions and Division 1 Specification Sections shall apply to this Section.

1.2 SPECIFICATION FORM AND DEFINITIONS:

A. These Specifications are abbreviated form and contain incomplete sentences. Omissions of words or phrases such as "the Contractor shall", "shall be", "as noted on the Drawings", "according to the drawings", "a", "an", "the", and "all" are intentional. Omitted words and phrases shall be supplied by inference.

B. When a word such as "proper", "satisfactory", "equivalent", and "as directed" is used, it requires Engineer's review.

C. "Provide" means furnish and install.

D. "Working Day" wherever used in these specifications shall mean the normal working days, Monday through Friday, exclusive of Saturday, Sunday and federally observed holidays.

E. Architect - Engineer hereinafter abbreviated A/E shall mean both the Design Architects and the Design Engineers.

F. Design Engineer hereinafter abbreviated D/E shall mean the engineering firm, CJD Engineering LLC, 2225 West Chesterfield Boulevard, Suite 200, Springfield, Missouri 65807, Telephone (417) 877-1700. Contact person: Allen Davis, adavis@cjd-eng.com

G. Electrical Contractor hereinafter abbreviated E/C shall mean the person or company and their subcontractors who enter into contract with the Owner to perform the electrical division work.

H. Mechanical Contractor hereinafter abbreviated M/C shall mean the person or company and their subcontractors who enter into contract with the Owner to perform the mechanical division work.

I. General Contractor hereinafter abbreviated G/C shall mean the person or company and their subcontractors who enter into contract with the Owner to perform the general division work.

J. Equipment and/or materials manufacturer hereinafter abbreviated E/M shall mean the manufacturer of equipment or materials specified or referred to.

1.3 GENERAL EXTENT OF WORK:

A. Provide plumbing systems indicated on drawings, specified or reasonably implied. Provide every device and accessory necessary for proper operation and completion of mechanical systems. In no case will claims for "Extra Work" be allowed for work about which M/C could have informed himself before bids were taken.

B. M/C shall familiarize himself with equipment provided by other Contractors, which require mechanical connections and controls.

1.4 LOCAL CONDITIONS:

A. Visit site and determine existing local conditions affecting work in contract.

B. Failure to determine site conditions or nature of existing or new construction will not be considered a basis for granting additional compensation.

1.5 CODES, ORDINANCES, RULES AND REGULATIONS:

A. Provide work in accordance with applicable codes, rules, ordinances, and regulations of Local, State and Federal Governments and other authorities having lawful jurisdiction.

B. Conform to latest editions and supplements of following codes, standards or recommended practices as adopted by the authority having jurisdiction.

1. CITY CODES:
   a. 2018 International Building Code.
   b. 2018 International Plumbing Code.
   c. 2018 International Fuel Gas Code.
   d. 2018 International Mechanical Code.
   e. 2018 International Fire Protection Code.
   f. 2018 International Energy Conservation Code.

2. SAFETY CODES:

   a. National Electric Safety Code Handbook H30- National Bureau of Standards.
   b. Occupational Safety and Health Standards - Department of Labor.
   c. Specifications for Making Buildings and Facilities Accessible To, and Usable By, the Physically Handicapped - American National Standards Institute ANSI Al 17.1

3. NATIONAL FIRE CODES:

   a. NFPA No. 54 Gas Appliance and Gas Piping Code.
   b. NFPA No. 70 National Electric Code - 2005 Edition.
   c. NFPA No. 89M Clearances, Heat Producing Appliances.
   d. NFPA No. 90A Air Conditioning and Ventilation Systems.
   e. NFPA No. 91 Blower and Exhaust Systems.
   f. NFPA No. 101 Life Safety Code - 1999 Edition.

C. Where following standards are applicable to equipment specified, equipment shall conform to requirements of standard and shall display the appropriate seal or seals:

1. AGA - The American Gas Association Laboratories.
2. ASME - American Society of Mechanical Engineers.
3. NSF National Sanitation Foundation.
4. UL Underwriters Laboratories Inc.

D. Drawings and specifications indicate minimum construction standards, but should any work indicated be sub-standard to any ordinances, laws, codes, rules or regulations bearing on work, Contractor shall

execute work in accordance with such ordinances, laws, codes rules or regulations without increased cost to Owner, but not until he has referred such variances to A/E for approval.

E. M/C shall secure and pay for necessary permits and certificates of inspection required by governmental ordinances, laws, rules or regulations. Keep a written record of all permits and inspection certificates and submits two copies to A/E with request for final inspection.

1.6 CONTRACT CHANGE:

A. Changes or deviations from contract; including those for extra or additional work must be submitted in writing for review of A/E. No verbal orders will be recognized.

B. Changes in the work shall be submitted in accordance with AIA Document A201. General Conditions of the Contract for Construction.

C. All change proposals shall be itemized indicating separately the costs for materials, labor, restocking changes, freight, bonds, insurance, overhead and profit. All materials shall be listed separately with quantities and individual unit prices. Labor factors shall be from a nationally recognized source with appropriate adjustment factors.

1.7 LOCATIONS AND INTERFERENCES:

A. Locations of equipment, piping and other mechanical work is indicated diagrammatically by mechanical drawings. Determine exact locations on job, subject to structural conditions, work of other Contractors, access requirements for installation and maintenance and to approval of A/E.

B. Study and become familiar with contract drawings of other trades and in particular the general construction plans and details to obtain necessary information for figuring installation. Cooperate with other workmen and install work to avoid interference with their work. Minor deviations, not affecting design characteristics, performance or space limitations may be permitted if reviewed by A/E prior to installation.

C. Any pipe, apparatus, appliance or other item interfering with proper placement of other work as indicated on drawings, specified, or required, shall be removed and if so shown, relocated and reconnected without extra cost. Damage to other work caused by this Contractor, his subcontractor, or his workmen shall be restored as specified for new work.

D. Do not scale mechanical and electrical drawings for dimensions. Accurately lay out work from dimensions indicated on architectural drawings unless such be found in error.

1.8 SYSTEM PERFORMANCE:

A. Final acceptance of work shall be subject to the condition that all systems, equipment, apparatus and appliances operate satisfactorily as designed and intended, work shall include required adjustment of systems and control equipment installed under this specification.

1.9 WARRANTY:

A. M/C warrants to Owner and Architect the quality of materials, equipment, workmanship and operation of equipment provided under this specification division for a period of one year from and after date of substantial completion of building and acceptance of mechanical systems by Owner.

B. Where manufacturers' warranties expire during the one year warranty period, M/C shall include provisions for extending warranty for the full one year period and shall include cost for warranty extension in his base bid. Where warranty extentions are not available from manufacturer, supplier or installer, M/C shall provide labor, parts and material warranty services equal to the requirements of these specifications and the terms of the manufacturer, supplier and installer warranties.

C. M/C warrants to Owner and Architect that on receipt of written notice from either of them within one year warranty period following date of acceptance all defects that have appeared in materials and /or workmanship, shall be promptly corrected to condition required by contract documents at M/C's expense.

D. The above warranty shall not supersede any separately stated warranty or other requirements required by law or by these specifications.

1.10 MATERIALS, EQUIPMENT AND SUBSTITUTIONS:

A. The intent of these specifications is to allow ample opportunity for M/C to use his ingenuity and abilities to perform the work to his and the Owner's best advantage, and to permit maximum competition in bidding on standards of materials and equipment required.

B. Material and equipment installed under this contract shall be first class quality, new, unused and without damage.

C. In general these specifications identify required materials and equipment by naming first the manufacturer whose product was used as the basis for the project design and specifications. The manufacturers product, series, model, catalog and/or identification numbers shall set quality and capacity requirements for comparing the equivalency of other manufacturer's products. Where other manufacturer's names are listed they are considered an approved manufacturer for the product specified, however, the listing of their names implies no prior approval of any product they may propose to furnish as equivalent to the first named product unless specific model or catalog numbers are listed in these specifications or in subsequent addenda. Where other than first named products are used for M/C's base bid proposal it shall be his responsibility to determine prior to bid time that his proposed materials and equipment selections are products of approved manufacturers, that will meet or exceed the specifications and are acceptable to the D/E.

D. Where materials or equipment are described but not named, provide required items of first quality, adequate in every respect for intended use. Such items shall be submitted to A/E for review prior to procurement.

E. Prior to receipt of bids, if M/C wishes to incorporate products other than those named in Specifications in his bid, he shall submit a written request for review of substitutions to D/E not less than **five working days** prior to bid date. D/E will review requests and acceptable items will be listed in an addendum issued to principal bidders.

F. Materials and equipment proposed for substitutions shall be equal to or superior to that specified in construction, efficiency, utility, aesthetic design, and color as determined by A/E whose decision shall be final and without further recourse. Physical size of substitute brand shall be no larger than space provided including allowances for access for installation and maintenance. Requests must be accompanied by two copies of complete descriptive and technical data including E/M's name, model, and catalog number, photographs or cuts, physical dimensions, operating characteristics and any other information needed for comparison.

G. In proposing a substitution prior to or subsequent to receipt of bids, include in such proposal cost of altering other elements of Project, including adjustments in mechanical-electrical service requirements necessary to accommodate such substitution; whether such affected elements be under this contract or under separate contracts.

H. Within seven working days after bids are received, apparent low bidder shall submit to A/E for approval three copies of a list of all major items of equipment he intends to provide. As soon as practicable and within 30 working days after award of Contract, M/C shall submit shop drawings for equipment and materials to be incorporated in work, for A/E review. Where 30 day limit is insufficient for preparation of detailed shop drawings on major equipment or assemblies, M/C shall submit manufacturer's descriptive catalog data and indicate date such detailed shop drawings will be submitted along with manufacturer's certification that order was placed within 30 working day limit.

I. After execution of contract, substitution of product brands for those named in Specifications will be considered, only if; 1) request is received within thirty days after Contract date and request includes statement showing credit due Owner, if any, if substitution products are used, or 2) Owner requests consideration be given to substitute brands.

1.11 SHOP DRAWINGS, OPERATION AND MAINTENANCE INSTRUCTION:

A. M/C shall furnish digital shop drawings to A/E for review. All shop drawings submitted to engineer for review shall comply with the requirements below and the bid documents. Any shop drawings requiring more that two reviews to comply will be subject to a $500 review charge by engineer.

B. Where catalog cuts are submitted for review, conspicuously mark or provide schedule of equipment, capacities, controls, fittings, sizes, etc. that are to be provided. Mark each submitted item with applicable section and paragraph numbers of these specifications, OR PLAN SHEET NUMBER when item does not appear in specifications. Where equipment submitted does not appear in base specifications of specified equivalent, mark submittals with applicable alternate numbers, change order numbers, change order number or letters of authorization. Each submittal shall contain at least two sets of original catalog cuts. Each catalog sheet shall bear E/M's name and address. All shop drawings on materials and equipment listed by UL shall indicate UL approval on submittal.

C. M/C shall check all shop drawings to verify that they meet specifications and/or drawing requirements before forwarding submittals to the A/E for their review. All shop drawings submitted to A/E shall bear M/C approval stamp which shall indicate that M/C has reviewed submittals and that they meet specification and/or drawing requirements. M/C's submittal review shall specifically check for but not be limited to the following: equipment capacities, physical size in relation to space allowed; electrical characteristics, provisions for supply, return and drainage connections to building systems. All shop drawings not meeting M/C's approval shall be returned to his supplier for resubmittal.

D. No shop drawings submittals will be considered for review by the A/E without M/C's approval stamp, or that have extensive changes made on the original submittal as a result of Contractor's review. All comments or minor notations on shop drawings shall be flagged as follows to indicate originator of comment or notation: 1 Contractor, 2 Construction Manager, 3 Architect, 4 Engineer.

E. A/E will not be responsible for the cost of returning shop drawing submittals that are submitted to them without M/C's review and approval stamp. A letter will be sent to M/C by either the Architect or Engineer indicating receipt of an improper submittal. M/C shall acknowledge receipt of letter and indicate his plans for pick-up or resubmitting. A/E will hold improper submittals for pick-up by M/C or supplier for 15 working days after date of receipt. If not picked up by the 16th working day, submittals will be disposed of by A/E.

F. A/E's review of shop drawings will not relieve M/C of responsibility for deviations from drawings and specifications unless such deviations have been specifically approved in writing by Owner of his representative, nor shall it relieve M/C of responsibility for errors in shop drawings. No work shall be fabricated until A/E's review has been obtained. Any time delay caused by correcting and resubmitting shop drawings will be M/C's responsibility.

G. Operating and Maintenance Instructions:

1. Submit with shop drawings of equipment three copies of installation, operating, maintenance instructions, and parts lists for equipment provided. Instructions shall be prepared by E/M.

2. Keep in safe place, keys and wrenches furnished with equipment under this contract. Present to Owner and obtain a receipt for same upon completion of project.

3. Prepare a complete brochure, covering systems and equipment provided and installed under this contract. Submit brochures to A/E for review before delivery to Owner. Contractor at his option may prepare this brochure or retain an individual to prepare it for him. Include cost of this service in bid. Brochures shall contain following:

4. Certified equipment drawings and/or catalog data with equipment provided clearly marked as outlined under this specification.

5. Complete installation, operating, maintenance instructions and parts lists for each item of equipment.

6. Special emergency operating instructions with a list of service organizations (including addresses and telephone numbers) capable of rendering emergency service to various parts of mechanical systems.

H. Provide brochures bound in Wilson-Jones No. 133-367-49 or National No. 132-87-784 black vinyl three-ring binders with metal hinge. Reinforce binding edge of each sheet of looseleaf type brochure to prevent tearing from continued usage. Clearly print on label insert of each brochure:

1. Project name and address.

2. Section of work covered by brochure, i.e., "Heating Ventilating and Air Conditioning", and "Plumbing" etc.

1.12 RECORD DOCUMENTS:

A. Record Drawings: Maintain a reproducible set of contract drawings and shop drawings in clean, undamaged condition, with mark-up of actual installations which vary substantially from the work as originally shown. Mark whichever drawing is most capable of showing "field" condition fully and accurately; however, where shop drawings are used for mark-up, record a cross-reference at corresponding location on working drawings. Mark with red erasable red pencil and, where feasible, use other colors to distinguish between variations in separate categories of work. Markup new information which is recognized to be of importance to Owner, but was for some reason not shown on either contract drawings of shop drawings. Give particular attention to concealed work, which would be difficult to measure and record at a later date. Note related change-order numbers where applicable. Organize record drawing sheers into manageable sets, bind with durable paper cover sheets, and prints suitable titles, dates and other identification on cover of each sheet.

B. Record Specifications: Maintain one copy of specifications, including addenda, change orders, and similar modifications issued in printed form during construction, and mark-up variations (of substance) in actual work in comparison with text of specifications and modifications as issued. Give particular attention to substitutions, selection of option, and similar information on work where it is concealed or cannot otherwise by readily discerned at a later date by direct observation. Note related record drawing information and product data, where applicable. upon completion of mark-up submit to Architect/Engineer for Owner's records.

C. The contractor shall provide a full set of photographs showing the entire underground equipment. The photographs shall be taken prior to any concrete being poured. The underground equipment shall consist of, but not be limited to, the following:

1. Piping
2. Conduits
3. Ductwork

D. The contractor shall provide the photographs in an 8.5” x 11” format for record keeping purposes with the maintenance manuals. The photos shall all be digital and a disk or C.D. shall be provided to the Owner as a permanent record.

1.13 ELECTRICAL REQUIREMENTS:

A. Consult Section 16B of electrical specifications for work to be provided by E/C in conjunction with installation of mechanical equipment.

B. Electrical work required to install and control mechanical equipment which is not shown on plans or specified under Section 16B shall be included in M/C's base bid proposal,

C. The cost of larger wiring, conduit, control and protective devices resulting from installation of equipment which was not used for basis of design as outlined in Article 15A-10g of specifications shall be paid by M/C at no cost to Owner or A/E.

D. M/C shall be responsible for providing supervision to E/C to insure that required connections, interlocking and interconnection of mechanical and electrical equipment are made to attain intended control sequences and system operation.

E. Furnish six complete sets of electrical wiring diagrams to A/E and three complete sets to E/C. Diagrams shall show factory and field wiring of components and controls. Control devices and field wiring to be provided by E/C shall be clearly indicated by notation and drawing symbols on wiring diagrams.

F. M/C shall obtain complete electrical data on mechanical shop drawings and shall list this data on an approval form which shall be presented monthly, or on request, to E/C. Data shall be complete with wiring diagrams received to date and shall contain necessary data on electrical components of mechanical equipment such as HP, voltage, amperes, watts, locked rotor current to allow E/C to order electrical equipment required in his contract.

G. Safety disconnect switches and manual and magnetic motor starters shall be provided by E/C. Exceptions will be allowed where mechanical equipment is provided with these devices installed as part of factory built control systems.

PART 2 - PRODUCTS (NOT APPLICABLE)

PART 3 - EXECUTION (NOT APPLICABLE)

PART 4 - EXHIBITS

4.1 EXHIBIT A

A. SUBSTITUTION REQUEST FORM following the end of this section.

END OF SECTION 220100

CJD Engineering LLC 2225 W. Chesterfield Blvd., Suite. 200 Springfield, MO 65807 (417) 877-1700 Fax: (417) 324-7735

EXHIBIT A - SUBSTITUTION REQUEST FORM

Return completed substitution request form with supporting data five (5) working days prior to bid date. Engineer reserves the right to refuse conderation of requested substitutions submitted less than five (5) working days prior to bid date. Substitution request will not be considered without supporting data.

Specification Section: _____ Page: _____ Paragraph _____

Drawing Detail No. / Sheet No. _____ Description: _____

Specified Manufacturer / Model No.: _____

Substitute Manufactuer / Model No.: _____

Attach supporting data including:

- A product description, specifications, drawings, photographs, samples, capacities at design conditions, reports, and test data adequate for evaluation of the request.
- A description of changes to the Contract Documents that the proposed substitituion will require for its proper installation.
- Location of substitution manufacturer's nearest factory certified service office.

The Undersigned certifies:

- Proposed substitution has been fully investigated and determined to be equal or superior in all respects to specified product.
- Same warranty will be furnished for proposed substitution as for specified product.
- Same maintenance service and source of replacement parts, as applicable, is available.
- Proposed substitution will have no adverse effect on mechanical, plumbing, fire sprinkler, electrical, or other trades and will not affect or delay progress schedule.
- Proposed substitution does not affect dimensions and functional clearances.
- Payment will be made for changes to building design, including A/E design, detailing, and construction costs caused by the substitution, errors in attached supporting data, or insufficient supporting data for thorough review.

Substituion request submitted by: _____

Signed by: _____

Firm: _____

Address: _____

Telephone: _____ Fax: _____

Engineer's Review:

__ Substitution accepted
__ Substitution accepted as noted
__ Substituion rejected
__ Subsititution request received too late

Remarks: _____

Acceptance of requested substitution does not relieve the proposed substitution from submittal/shop drawing review and does not constitute prior approval of proposed substitutued materials or equipment.

Signed by: _____ Date: _____

SECTION 220500 – BASIC MECHANICAL MATERIALS AND METHODS

PART 1 - GENERAL

1.1 RELATED DOCUMENTS

A. Drawings and general provisions of the Contract, including General and Supplementary Conditions, Division 01 Specification Sections and section 220100 - General Mechanical Requirements shall apply to this Section.

PART 2 - PRODUCTS (NOT USED)

PART 3 - EXECUTION

3.1 CUTTING AND PATCHING:

A. M/C shall do cutting and patching of building materials required for installation of work herein specified. Cut no structural members without Architect's approval and in a manner approved by him.

B. Patching shall be by mechanics of particular trade involved and shall meet approval of Architect.

C. Drilling and cutting of openings through building materials requires Architect's review and approval. Make openings in concrete with concrete hole saw or concrete drill. Do not use star drill or air hammer for this work.

3.2 PIPE SLEEVES:

A. Provide proper type and size pipe sleeves and install in walls or floors and where otherwise noted. Sleeves are not required for supply and waste piping through wall supporting plumbing fixtures or for cast iron soil pipe passing through concrete slab on grade except where penetrating a membrane waterproof floor.

B. Each sleeve shall be continuous through wall, floor or roof and shall be cut flush on each side except where indicated otherwise. Sleeves shall not be installed in structural member except where indicated or approved. Sleeves shall be required through floors subject to flooding such as toilet rooms, equipment rooms and kitchens. The contractor shall have the option of:

C. Providing a cast iron sleeve with integral flanges extending 1 inch above finished floor. Sleeve shall be cast in concrete when floor is poured. Annular space between sleeve and pipe shall be filled with Kaowool.

or

D. Provide core-drilled opening in concrete with Thunderline Link-Seal or Calpico Sealing Linx between piping and opening.

E. Sleeves passing through floors with waterproof membranes shall be core-drilled and sealed with Thunderline Link-Seal or Calpico Sealing Linx.

F. Sleeves passing through walls with waterproof membranes shall be sealed with Thunderline Link-Seal or Calpico Sealing Linx.

CJD Engineering LLC 2225 W. Chesterfield Blvd., Suite. 200 Springfield, MO 65807 (417) 877-1700 Fax: (417) 324-7735

G. Pipe insulation shall run continuous thru pipe sleeves with 1/4" minimum clearance between insulation and pipe sleeve. Provide metal jackets over insulated pipes passing thru fire walls, floors and smoke partitions. Jacket shall be 0.018 stainless steel extending 12 inches on either side of barrier and secured to insulation with 3/8" wide band. Provide Kaowool fire master bulk packing between sleeve and metal jacket. Packing thickness shall be sized per manufacturers recommendation for maintaining the integrity, of the fire wall/floor or smoke partition. Fire protection system shall be rated per ASTM E 119. Equivalents to Kaowool are 3M, Flame Stop or Flame Safe.

H. Where piping passes through walls serving as air plenums or chases, seal annular space between pipe and sleeve air tight with Kaowool Firemaster Bulk Packing.

3.3 OPENINGS:

A. This Contractor shall include the installation of all boxes and sleeves for openings required to install this work, excepting only structural openings incorporated in the structural drawings. Sleeves shall be installed for all pipes passing through structural slabs and walls. He shall set and verify the location of sleeves as shown on structural plans that pass through beams, only if so shown.

B. Penetrations in walls for sheet metal ducts shall be sealed by the M/C by stuffing glass fiber into the cracks between the walls, and floors and the ducts. The exposed joints shall then be caulked on each side with non-hardening caulking such as "Tremco Acoustical Sealant". This work applies to all walls in buildings.

3.4 MUTILATION:

A. Mutilation of building finishes, caused by installation of mechanical equipment, fixtures, piping and other mechanical devices shall be repaired at M/C's expense to approval of Architect.

3.5 EXCAVATION AND BACKFILL:

A. Perform necessary excavating to receive work. Provide necessary sheathing, shoring, cribbing, tarpaulins, etc. as required and remove same at completion of work. Perform excavation in accordance with appropriate section of these specifications, and in compliance with OSHA Safety Standards.

B. Excavate trenches of sufficient width to allow ample working space, and no deeper than necessary for installation work.

C. Conduct excavations so no walls or footings are disturbed or injured. Backfill excavations made under or adjacent to footings with selected earth or sand and tamp to compaction required by A/E. Mechanically tamp backfill under concrete and pavings in 6 inch layers to 95% standard density.

D. Backfill trenches and excavations to required heights with allowance made for settlement. Tamp fill material thoroughly and moistened as required for specified compaction density. Dispose of excess earth, rubble and debris as directed by Architect.

E. When available, refer to test hole information on Architectural drawings or specifications for types of soil to be encountered in excavation in base bid.

3.6 WELDING:

A. Contractor shall be responsible for quality of welding and suitability of welding procedures. All welding shall be in accordance with American Welding Society Standard B3.0 and ANSI Standards B31.1.

B. Welding shall be done only by welders who have successfully passed welder qualification tests in previous 12 months for type of welding required. Each welder shall identify his work with a code marking before starting any welded pipe fabrication. Contractor shall submit three copies of a list of welders who will work on project listing welders code, date and types of latest qualifications test passed by each welder.

C. Welded joints shall be fusion-welded in accordance with Level AR3 of American Welding Society Standard AWS D10.9 "Standard for Qualification of Welding Procedures and Welders for Pipe and Tubing". Welders qualified under National Certified Pipe Welding Bureau will be acceptable.

D. Bevel all piping and fittings in accordance with recognized standards by flame cutting or mechanical means. Align and position parts so that branches and fittings are set true. Make changes in direction of piping systems with factory made welding fittings. Make branch connections with welding tees or forged weldolets.

3.7 SETTING, ADJUSTMENT AND EQUIPMENT SUPPORTS:

A. Work shall include mounting, alignment and adjustment of systems and equipment.

B. Set equipment level on adequate foundations and provide proper anchor bolts and isolation as shown, specified or required by E/M's installation instructions.

C. Provide concrete bases for all floor and slab mounted equipment. Refer to drawings for required base type and size. Provide 3 1/2" high base where base is not shown on drawings.

3.8 PAINTING OF MATERIALS AND EQUIPMENT:

A. Equipment and materials exposed to interior dry environment shall have a minimum of one primer and one finish coat. Equipment and materials mounted in exterior location shall have a minimum if one primer and two finish coats with total thickness of at least 5 mils. Finish coat colors in finish areas shall be as selected by A/E.

B. After installation, damage to painted surfaces shall be properly prepared and primed with primers equal to factory materials. Finish coating shall be same color and type as factory finish.

C. Where extensive refinishing of factory applied finishes are required equipment shall be completely repainted. A/E will make final determination on extent of refinishing required.

D. Paint all exterior natural gas piping with one primer coat and two finish coats.

3.9 MAINTENANCE OF SYSTEMS:

A. M/C shall be responsible for operation, maintenance and lubrication of equipment installed under his contract.

3.10 FILTERS:

A. Provide temporary MERV 8 throw-away filters in all permanent heating and air conditioning equipment systems and the return ductwork being utilized during construction. Prior to testing and balancing systems remove temporary filter media and install clean unused filters of the type specified. Clean filters shall be installed in equipment for final acceptance inspection by A/E.

B. Final filters shall have per mechanical schedules with a minimum of MERV 8 rating equal to Farr AP.

3.11 ACCESS PANELS:

A. Milcor, Wade or Zurn access panels shall be provided wherever necessary to provide access to valves, traps, etc., located in concealed spaces. Each fire damper, automatic splitter damper, etc., shall have an access panel. Size shall be adequate for inspection and removal of equipment and none shall be less than 12" x 6".

B. Duct Access Doors: Doors shall be equivalent to CESCO Model 14AD-5. Frame shall not be less than 22 gauge galvanized steel, with 24 gauge door panels. Doors shall have minimum 1” thick insulation, PVC foam tape gaskets, zinc plated steel continuous type hinge and latches. Equivalent by Nailor.

C. Mechanical Wall Access Doors: Doors shall be equivalent to CESCO Model FW-SS, all purpose access panel. Frame shall be 16 gauge stainless steel #304, with 14 gauge stainless steel #304 frame. The hinge shall be continuous stainless steel – concealed. The latch shall be flush mounted screwdriver operated cam latch. The finish shall be #304 stainless steel with a #4 satin finish.

D. Fire Rated Wall/Ceiling Access Door: Doors shall be equivalent to CESCO model FB. Frame shall be 16 gauge galvanized bonderized steel and 20 gauge galvanized bonderized steel. Hinges shall be continuous, galvanized steel with stainless steel pin and a key-operated latch. Provide automatic type door closure. Door shall have a UL rating to match rating of wall/ceiling rating.

3.12 CLEANING AND FLUSHING HEATING HOT WATER SYSTEMS:

A. The heating hot water system for project shall be thoroughly cleaned before placing in operation to rid system of dirt, piping compound, mill scale, oil and any other foreign material.

B. After system is complete, the Contractor shall fill piping loop and all runouts with clear water. For this purpose supply and return runouts shall be temporarily connected together at each air handling and fan coil unit location. There shall be no water flow through air handling and fan coil unit. Loop water shall be circulated for one hour with make up water open and drain open to accomplish initial flushing of system.

C. After initial flushing, individual air handling and fan coil, etc. units shall be connected permanently to supply and return runouts and system filled for operation under normal closed loop conditions. Contractor shall add trisodium phosphate in an aqueous solution to system at rate of one pound per fifty gallons of water in system. After system is filled with this solution, system water shall be brought up to 95 degrees F temperature and allowed to circulate for two hours. System shall then be drained completely and refilled with fresh water.

D. After system has been completely cleaned as specified herein, it shall be tested by litmus paper or other dependable method and shall be left slightly alkaline side (pH 7.5). If system is found to be still on the acid side, cleaning by use of trisodium phosphate shall be repeated.

E. System Additives - M/C shall not add any "stop- leak" compounds to the system.

F. Provide same cleaning and flushing as outlined above for the heating hot water system.

3.13 CLEANING OF SYSTEM AND EQUIPMENT:

A. After pressure testing of systems and equipment and before operational test thoroughly clean interiors of piping and equipment.

B. Clean equipment as recommended by manufacturers. Where specific instructions are not provided by equipment manufacturer clean equipment systems as follows:

C. Air Handling System: Before starting any air system clean all debris, foreign matter and construction dirt from air system and fan. Provide equipment requiring filters, such as air handling units, fan coil units, blowers, etc., with throwaway filters specified under this specification. After cleaning air system install temporary filters and run continuously for 8 hours at full volume.

3.14 STERILIZATION OF DOMESTIC WATER SYSTEM:

A. After final pressure testing of distribution system thoroughly flush entire system with water until free of dirt and construction debris. Fill system with solution of liquid chlorine or hypochlorite of not less than 50 PPM. Retain treated water in system until test indicate non- spore-forming bacteria have been destroyed or for 24 hours whichever is greater.

B. All points in systems shall have at least 10 PPM of solution at end of retention period. Open and close each valve at least six times in system during sterilization to sterilize valve parts.

C. When time and concentration conditions have been met, drain system and flush with fresh domestic water until residual cleaning solution is less than 1.0 PPM. Open and close each valve in system six times during flushing operation.

D. Test samples taken from several points in system shall indicate absence of pollution for two full days. Repeat sterilization as required. Acceptance of system will not be given until satisfactory bacteriological results are obtained.

3.15 START-UP, CHANGE-OVER, TRAINING AND OPERATIONAL CHECK:

A. M/C shall perform initial start-up of systems and equipment and shall provide necessary supervision and labor to make first seasonal changeover of systems. Personnel qualified to start-up and service this equipment, including E/M's technicians when specified, and Owner's operating personnel shall be present during these operations.

3.16 PRE-FINAL AND FINAL CONSTRUCTION REVIEW:

A. At M/C's request, A/E will make pre-final construction review to determine if to the best of their knowledge project is completed in accordance with plans and specifications. Items found by A/E as not complete or not in accordance with requirements of contract will be outlined in report to M/C. After completion and/or correction of these items M/C shall notify Architect he is ready for final review.

B. All necessary system adjustments including air and water systems balancing shall be completed and all specified records and reports submitted in sufficient time to be received by A/E at least ten working days prior to date of final construction review.

C. At final construction review, M/C and his major subcontractors shall be present or shall be represented by a person of authority. Each Contractor shall demonstrate, as directed by A/E, that his work complies with purpose and intent of plans and specifications. Respective Contractor shall provide labor, services, instruments or tools necessary for such demonstrations and tests.

END OF SECTION 220500

CJD Engineering LLC 2225 W. Chesterfield Blvd., Suite. 200 Springfield, MO 65807 (417) 877-1700 Fax: (417) 324-7735

SECTION 220600 – HANGERS AND SUPPORTS

PART 1 - GENERAL

1.1 RELATED DOCUMENTS

A. Drawings and general provisions of the Contract, including General and Supplementary Conditions, Division 01 Specification Sections, section 220100 - General Mechanical Requirements, section 220500 – Basic Mechanical Materials and Methods shall apply to this Section.

B. Provide and be responsible for location of piping hangers, supports and inserts, etc., required for installation of piping under this contract. Design of hangers and supports shall conform to current issue of Manufacturer's Standardization Society Specification (MSS) SP-58.

PART 2 - PRODUCTS

2.1 PIPE HANGERS AND SUPPORTS:

A. Pipe hangers shall be capable of supporting piping in all conditions of operation. They shall allow free expansion and contraction of piping, and prevent excessive stress resulting from transferred weight being induced into pipe or connected equipment. Support horizontal or vertical pipes at locations of least vertical movement.

B. Unless indicated otherwise on drawings support horizontal steel piping as follows:

PIPE SIZE	ROD DIAMETER	MAXIMUM SPACING
Up to 1 ¼”	3/8”	8 ft.
1 ½” to 2”	3/8”	10 ft.
2 ½” to 3 ½”	½”	12 ft.
4” to 5”	5/8”	15 ft.
6”	¾”	17 ft.
8” to 12”	7/8”	22 ft.

C. Unless indicated otherwise on drawings support horizontal copper tubing as follows:

NOM. TUBING SIZE	ROD DIAMETER	MAXIUM SPACING
Up to 1”	3/8”	6 ft.
1 ¼” and 1 ½”	3/8”	8 ft.
2”	3/8”	9 ft.
2 ½”	½”	9 ft.
3” and 4”	½”	10 ft.

D. Provide continuous threaded hanger rods wherever possible. No chain, wire, or perforated straps shall be used. Hanger rods shall be subjected to tensile loading only, where lateral or axial pipe movement occurs provide suitable linkage to permit swing. Provide pipe support channels with galvanized finish for concealed locations and painted finish for exposed locations. Submit design for multiple pipe supports indicating pipe sizes, service and support details to Architect- Engineer for review prior to fabrication.

E. Provide Anvil pipe hangers for vertical pipe risers as follows:

PIPE MATERIAL	PIPE SIZE	HANGER FIG. NO.
Copper	½” thru 4”	CT-121
Steel	¾” thru 20”	261

CJD Engineering LLC 2225 W. Chesterfield Blvd., Suite. 200 Springfield, MO 65807 (417) 877-1700 Fax: (417) 324-7735

F. Provide Anvil Fig. 194, 195, 199 steel wall brackets for piping suspended or supported from walls. Brackets shall be prime coated carbon steel.

G. Provide Anvil Fig. 167 protection shields for all insulated piping sized so that line compressive load does not exceed one-third of insulation compressive strength. Shield shall be galvanized steel and support lower 180 degrees of pipe insulation. Omit copper plating on hangers mounted outside insulation on copper tubing.

H. Structural Attachments for pipe hangers shall be as follows:

1. Concrete Structure: Provide Grinnel Fig. 285 concrete insert for loads up to 400 lbs. and Grinnell Fig. 281 wedge type concrete insert for loads up to 1200 lbs.

2. Steel Beam Structure: Provide Grinnell Fig. No. 86 malleable iron C-clamp for pipe size 2" and smaller and Grinnell Fig. 229 malleable iron beam clamp for pipe size 2-1/2" and larger.

PIPE MATERIAL	PIPE SIZE	HANGER FIG NO.
Copper	½” thru 4”	CT-65*
Steel	3/8” thru 4”	65
Steel	5” thru 30”	260

I. Provide Anvil Fig. 45 channel trapeze pipe hangers for horizontal multiple pipe runs with pipe clamps or pipe rollers as follows:

PIPE MATERIAL	PIPE SIZE	CLAMP NO.	ROLLER NO.
Copper	3/8” thru 4”	PS1100*	PS1901
Steel	3/8” thru 6”	PS1100	PS1902

*Copper Plated

J. Provide necessary structural steel and attachment accessories for installation of pipe hangers and supports. Where heavy piping loads are to be attached to building structure verify structural loading with A/E prior to installation.

2.2 EQUIPMENT ANCHORS:

A. Anchors shall be proper type and size recommended by manufacturer for equipment to be anchored.

2.3 CONCRETE INSERTS AND ANCHORS:

A. Provide concrete inserts for attaching piping and equipment as follows:

B. In new construction where attachment points can be predetermined provide PHD Fig. 950 continuous concrete insert of Fig. 950N Universal Steel Concrete insert.

C. In existing construction or new construction where attachment points can not be located before setting concrete forms provide McCullock Kwik-Bolt or Phillips red head concrete anchors of proper type for attachments.

PART 3 - EXECUTION

3.1 PIPE HANGERS AND SUPPORTS

CJD Engineering LLC 2225 W. Chesterfield Blvd., Suite. 200 Springfield, MO 65807 (417) 877-1700 Fax: (417) 324-7735

A. Where horizontal piping movements are such that hanger rod angularity from vertical is greater than 4 degrees from cold to hot position of pipe, offset hanger, pipe, and structural attachments so that rod is vertical in hot position. Hangers shall not become disengaged by movements of supported pipe.

B. Provide sufficient hangers to adequately support piping system at specified spacing at changes in piping direction and at concentrated loads. Hangers shall provide for vertical adjustments to maintain pitch required for proper drainage and for longitudinal travel due to expansion and contraction of piping. Fasten hangers to building structural members wherever practicable.

C. Hangers in direct contact with copper pipe or tubing shall be copper plated.

D. Support horizontal cast iron soil pipe with one hanger for each joint located close to hub.

E. Support plastic piping as recommended by piping manufacturer.

F. Support vertical cast iron soil pipe and PVC pipe at every floor and steel and copper tubing at every other floor except where indicated otherwise on drawings.

G. Mount hangers for insulated piping on outside of pipe, hangers sized to allow for full thickness of pipe insulation.

END OF SECTION 220600

CJD Engineering LLC 2225 W. Chesterfield Blvd., Suite. 200 Springfield, MO 65807 (417) 877-1700 Fax: (417) 324-7735

SECTION 220800 – PIPING INSULATION

PART 1 - GENERAL

1.1 RELATED DOCUMENTS

A. Drawings and general provisions of the Contract, including General and Supplementary Conditions, Division 01 Specification Sections, section 220100 - General Mechanical Requirements, section 220500 – Basic Mechanical Materials and Methods shall apply to this Section.

PART 2 - PRODUCTS

2.1 PIPING INSULATION:

A. Provide necessary materials and accessories for installation of insulation for plumbing and mechanical systems as specified and/or detailed on drawings insulation type, jacket, and thickness for specific piping systems or equipment shall be as listed in insulation schedule.

B. Provide insulation materials manufactured by Certain Teed, Knauf, Dow Chemical, Johns Manville or Owen/Corning Fiberglas.

C. Insulation, except where specified otherwise, shall have composite fire and smoke hazard ratings as tested by ASTM E-84, NFPA 255, and UL 723 procedures not exceeding:

FLAME SPREAD	25
SMOKE DEVELOPED	50
FUEL CONTRIBUTED	50

D. Provided insulation accessories such as adhesives, mastics, cements, tape and glass fabric with same component ratings as listed above. Products or their shipping cartons shall bear label indicating their flame and smoke ratings. Treatment of jackets or facings for impart flame and smoke safety shall be permanent. Use of water soluble treatments such as corn paste or wheat paste is prohibited. This does not exclude approved lagging adhesives.

E. Where glass is specified in the following insulation methods provide resin impregnated with open weave glass fabric with 10/20 thread count.

F. Abbreviations for manufacturers of adhesives, mastics and coating specified shall be C.M. for Chicago Mastic Company and B.F. for Benjamin Foster Company.

G. Pipe insulation materials and application methods by type shall be as follows:

1. Elastomeric: Insulation for cold surface piping system with -40 degrees F to +220 degrees F operating temperature range shall be Armstrong AP Armaflex Elastomeric Pipe insulation average thermal conductivity shall not exceed 0.27 BTU/Hr. at 75 degrees F mean temperature. To greatest extent possible apply insulation without longitudinal joint by slipping insulation over piping. Seal all seams and butt joints with Armstrong 520 adhesive. Insulate fittings as follows:

   a. Insulate fittings with Miter-Cut pieces of AP Armaflex pipe insulation equal to thickness of adjoining pipe insulation. Insulate fittings too large to cover with pipe insulation with insulation from fabricated Armaflex sheet insulation using Armstrong templates. Join and seal all fittings joints with Armstrong 520 adhesive. Finish insulation as soon as possible

CJD Engineering LLC 2225 W. Chesterfield Blvd., Suite. 200 Springfield, MO 65807 (417) 877-1700 Fax: (417) 324-7735

with two coats of Armstrong Armaflex vinyl- lacquer finish in color selected by Architect. All insulation used outdoors shall be painted to prevent ultra violet deterioration of insulation.

2. Fiberglass: Insulation for hot and cold surface piping systems with -60 degrees F to +850 degrees F operating range shall be Owens-Corning Fiberglas 25 pipe insulation with white fire retardant ASJ jacket. Average 75 degrees F mean temperature. Seal longitudinal jacket laps and butt strips with C.M. No. 17-465 or B.F. No. 85-75 vapor barrier adhesive. Insulate valves and fittings as follows:

   a. Insulate exposed and concealed valves and fittings with PVC premolded fitting covers. Provide “Zeston” Series 300 fitting covers as manufactured by Johns Manville.

H. Insulation materials and application methods for piping hangers supports, anchors, guides, expansion joints, etc., shall be as follows:

1. Insulate hangers and supports from direct contact with cold surfaces with Styrofoam HD- 300 plastic foam inserts of half or full sections of premolded pipe insulation equal in thickness to adjoining insulation. Provide inserts with vapor barrier jacket for lapping 2" over adjacent pipe insulation jacket. Protect insulation with insulation shields supporting lower 180 degrees of pipe insulation sized so that pipe compressive load does not exceed one third of insulation insert compressive strength. Seal joints with vapor barrier sealer specified for insulation type used.

2. Insulate pipe anchors in direct contact with cold piping for a distance of 12" or as detailed on drawings from contact point with piping. Anchor insulation shall be one half the thickness of adjoining pipe insulation with vapor barrier. Seal and finish joints with vapor barrier sealer specified for insulation type used.

3. Insulate pipe guides from direct contact with cold surfaces piping with Styrofoam HD-300 plastic foam full section inserts of premolded pipe insulation equal in thickness to adjoining pipe insulation. Provide inserts with vapor barrier jacket for overlapping 2" over adjoining pipe insulation. Insert jacket shall be equal in performance and appearance to adjacent insulation jacket. Seal and finish joints with vapor barrier sealer specified for insulation type used.

4. Insulate pipe expansion joints on cold surface piping with over-sized section of premolded pipe insulation equal in thickness to adjoining pipe insulation. Cover shall float free one end with expansion and contraction of piping system. Seal free end with 4 mil thick PVC vinyl sheet attached to adjoining insulation. Provide sufficient slack in vinyl material to allow for maximum pipe movement.

5. Where piping hanger can not be isolated from cold pipe surfaces insulate piping at hanger locations with extra thickness of pipe insulation. Insulate hanger rod to point 12" above pipe with minimum insulation thickness equal to one-half thickness of pipe insulation. Seal and finish joints with vapor barrier sealer specified for insulation type used.

6. Insulate floor supports in direct contact with cold surface piping with Armstrong 1/2" thick Armstrong FR/Armaflex pipe or sheet insulation as required by surface. Insulate supports from pipe to floor plate and seal insulation joints with Armstrong No. 520. Finish insulation with Armstrong Armaflex vinyl-lacquer finish.

I. SEE PLANS FOR PIPING INSULATION SCHEDULE

CJD Engineering LLC 2225 W. Chesterfield Blvd., Suite. 200 Springfield, MO 65807 (417) 877-1700 Fax: (417) 324-7735

PART 3 - EXECUTION

3.1 Install insulation over clean dry surfaces with joints firmly butted together. Insulation at equipment, flanges, fittings, etc., shall have straight edges with box type joints with corner beads as required. Where plumbing and heating insulation terminates at equipment or unions, taper insulation at 30 degrees angle to pipe with one coat finishing cement and finish same as fittings. Total insulation system shall have neat smooth appearance with no wrinkles, or folds in jackets, joint strips or fitting covers. Seal butt joints at maximum intervals of 45 feet to prevent vapor barrier failures from being transmitted to adjoining insulation sections.

3.2 Undamaged insulation systems on cold surface piping and equipment shall perform their intended functions as vapor barriers and thermal insulation without premature deterioration or vapor barrier. Contractor shall take every reasonable precaution to provide insulation systems with continuous unbroken vapor barriers.

3.3 All pipe insulation shall be continuous through walls, ceiling or floor openings, or sleeves; except where firestop or firesafing materials are required.

3.4 Insulation of removable heads and valves, manholes access covers, HVAC and plumbing pumps, etc., shall be fabricated to allow removal without damage to insulation. Provide removable units with vapor-proof cover fabricated to be sealed to equipment vapor barrier.

3.5 Insulation failing to meet workmanship and appearance standards shall be replaced with an acceptable installation before final acceptance of project will be given. Insulation failing to meet performance requirements of this specification for a period of one year after date of final acceptance or through one heating season and one cooling season, whichever is longer shall be replaced with an acceptable installation. All costs to correct insulation deficiencies and costs to repair damages to other work shall be at M/C's expense at not cost to Owner.

END OF SECTION 220800

CJD Engineering LLC 2225 W. Chesterfield Blvd., Suite. 200 Springfield, MO 65807 (417) 877-1700 Fax: (417) 324-7735

SECTION 221100 –GENERAL-DUTY VALVES

PART 1 - GENERAL

1.1 RELATED DOCUMENTS

A. Drawings and general provisions of the Contract, including General and Supplementary Conditions, Division 01 Specification Sections, section 220100 - General Mechanical Requirements, section 220500 – Basic Mechanical Materials and Methods shall apply to this Section.

PART 2 - PRODUCTS

2.1 VALVES AND INSTALLATION:

A. Valves 2-1/2" and smaller shall have solder, socket weld, flanged or screwed end connections as required by piping materials unless otherwise specified or shown on drawings. Install union connection in the line within two feet of each screw end valve unless valve can be otherwise easily removed from line. Valves 3" and over shall have flange end connections or butt weld ends as scheduled. Optional grooved valves may be used where scheduled.

B. Non-rising stem valves shall not be installed at any point in the piping systems. With permission of Architect-Engineer, non-rising stem valves may be installed at particular points where space is restricted.

C. Valves installed in piping systems shall be compatible with system maximum test pressure, pipe materials, pipe joining method, and fluid or gas conveyed in system.

D. Valves shall be the same size as piping shown on drawings. Do not reduce valve size.

E. Valves shall be designed for repacking under pressure when fully opened and backseated.

F. Equivalent gate and plug valves listed on current comparison charts of specified valve manufacturers by Anvil, Crane, Centerline, Nibco, Fairbanks, Hale, Stockham, Jenkins, Kennedy, Keystone, Powell, Walworth or Victaulic will be acceptable.

G. Equivalent silent check valves listed on current comparison charts of specified valve manufacturers by Anvil, Combination Pump Valve Co., Pagent, Nibco, Stockham, Williams Hager, Mission or Victaulic will be acceptable.

2.2 VALVES:

A. Ball valves shall be scheduled as Type "BLV" valves. Valve specifications by type number shall be as follows:

TYPE NO.	SPECIFICATION
BLV-1	3" valves and smaller, Crane bronze full port ball valve 600 PSI-WOG, teflon seats, stainless steel ball, stem with insulated handle (model no. 9303-S), with screwed ends.

B. Balancing valves shall be scheduled as Type "BAV" valves. Valve specifications by type number shall be as follows:

TYPE NO. SPECIFICATION

CJD Engineering LLC 2225 W. Chesterfield Blvd., Suite. 200 Springfield, MO 65807 (417) 877-1700 Fax: (417) 324-7735

BAV-1 4" valves and smaller, Bell and Gossett Model CB circuit setter balance valve, bronze body, 125 PSI-WP at 250 degrees F precision machined orifice calibrated position indicator, meter connections with built-in check valves flanged ends. Provide complete with polyurethane insulation cover.

C. Silent check valves shall be scheduled as type "SCV" valves. Valve specifications by type number shall be as follows:

TYPE NO. SPECIFICATION

SCV-1 2" valves and smaller Anvil Fig. 3600 bronze check valve, 250 PSI-WOG, stainless steel spring, stainless steel stem, teflon disc and seat ring, screwed or solder ends.

SCV-2 2-1/2" and larger Metraflex Style 900 ANSI Class 125 iron body, stainless steel trim check valve 125 PSI-ASA with flanged ends.

D. Plug valves shall be scheduled as type PLV valves. Valve specifications by type number shall be as follows:

TYPE NO. SPECIFICATION

PLV-1 1 " valves and smaller Hays 7400 series iron body gas cock, 175 PSI-WOG bronze plug washer and nut, screwed ends.

PLV-2 1-1/4" thru 2-1/2" valves, Homestead Fig. 651, semi-steel lubricated plug valve, 200 PSI-WOG, coated plug, short pattern screwed ends. Provide complete with standard pattern cast handle.

VALVE SCHEDULE

Service	Size	Stop	Check	Balance
Domestic Water	Up to 3”	BLV-1	SCV-1	BAV-1
Domestic Water	2 ½” & Up	-	SCV-2	-
Natural Gas	Up to 1”	PLV-1	-	-
Natural Gas	1 ¼” to 2 ½”	PLV-2	-	-

PART 3 - EXECUTION

3.1 VALVES AND INSTALLATION:

A. Install necessary valves within piping systems to provide required flow control and to allow isolation for inspection, maintenance and repair of each piece of equipment or fixture, and on each main and branch service loop.

B. Install each valve so that it is easily accessible for operation, visual inspection, and maintenance.

C. Install globe valves with pressure on top of disc except where prevented by code. Globe valves installed in lines that must be completely drained for inspection, maintenance or to prevent freezing shall be installed with stem in horizontal position to insure complete drainage of pipe lines.

D. Gate valves shall not be installed in pipe lines where intended service is throttling service or where piping is subject to vibration as part of normal operation conditions.

CJD Engineering LLC 2225 W. Chesterfield Blvd., Suite. 200 Springfield, MO 65807 (417) 877-1700 Fax: (417) 324-7735

END OF SECTION 221100

CJD Engineering LLC 2225 W. Chesterfield Blvd., Suite. 200 Springfield, MO 65807 (417) 877-1700 Fax: (417) 324-7735

SECTION 221220 - GAUGES AND THERMOMETERS

PART 1 - GENERAL

1.1 RELATED DOCUMENTS

A. Drawings and general provisions of the Contract, including General and Supplementary Conditions, Division 01 Specification Sections, section 220100 - General Mechanical Requirements, section 220500 – Basic Mechanical Materials and Methods shall apply to this Section.

PART 2 - PRODUCTS

2.1 DIAL THERMOMETERS:

A. Provide Marsh/Marshalltown Master Therm Bimetal Dial Thermometers with 5" dial and recalibrator.

B. Provide thermometers with polished 304 stainless steel case and stem, 1/2" NPT male back or bottom connections. Accuracy shall be within 1 % of range.

C. Provide each thermometer with separable well for installation in 3/4" F.P.T. pipe connections.

D. Provide each thermometer with Peterson Equipment Company 1/8" O.D. 6" long probe for insertion into a gage connector plug.

E. Equivalent thermometers by Mueller, Trerice, Weksler, or Weston.

F. For thermometer locations see Section 22 of this specification and the drawings.

END OF SECTION 221220

CJD Engineering LLC 2225 W. Chesterfield Blvd., Suite. 200 Springfield, MO 65807 (417) 877-1700 Fax: (417) 324-7735

SECTION 221400 – PIPING SYSTEMS

PART 1 - GENERAL

1.1 RELATED DOCUMENTS

A. Drawings and general provisions of the Contract, including General and Supplementary Conditions, Division 01 Specification Sections, section 220100 - General Mechanical Requirements, section 220500 – Basic Mechanical Materials and Methods shall apply to this Section.

PART 2 - PRODUCTS

2.1 PIPING IDENTIFICATION:

A. Lettering on marker shall be at least 1-inch high block type in contrasting color. An arrow indicating flow direction shall be painted next to each marker. Where markers occur on parallel groups of piping they shall be neatly lined up.

B. See Piping Identification Schedule.

PIPING IDENTIFICATION SCHEDULE

Service	Letter Wording	Marker Color	Letter Color
Domestic Cold Water	Domestic Cold Water	Green	White
Domestic Hot Water	Domestic Hot Water	Yellow	Black
Domestic Hot Water Return	Hot Water Return	Yellow	Black
Fire Sprinkler Water	Fire Sprinkler Water	Red	White

2.2 PIPING MATERIALS AND FITTINGS:

A. Piping used throughout project shall conform to the following specifications. Piping shall be plainly marked with manufacturers name and weight. All materials listed may not be required on this project. See piping material schedules in Section 22 of this specification for materials to be used for each piping system. Piping materials shall be as follows:

1. Hubless Cast Iron Soil Pipe:

a. Pipe and fittings shall be gray cast iron with spigot bead and positioning lug. Pipe and fittings shall be coated inside and out with asphaltum preservative and shall meet requirements of current Cast Iron Soil Pipe Institute Standard 301-69T.

b. Pipe joints shall be no-hub joint couplings consisting of neoprene rubber sleeve, stainless steel shield and clamp assembly.

c. Pipe and fittings by Tyler Pipe, Charlotte or Central Foundry.

2. Carbon Steel Pipe (1/8" through 2-1/2"):

a. Provide continuous weld or electric resistance welded carbon steel pipe conforming to ASTM Specification A-120 or A-53 as scheduled.

b. Pipe joints shall be threaded conforming to ANSI Standard B2.1.

CJD Engineering LLC 2225 W. Chesterfield Blvd., Suite. 200 Springfield, MO 65807 (417) 877-1700 Fax: (417) 324-7735

c. Pipe by Armco, Youngstown, United States Steel or equal.

3. Polyvinyl Chloride (PVC) Pipe:

a. Provide Type 1, Grade 1, Polyvinyl Chloride Pipe conforming to requirements of current ASTM Specification D-1785 for pressure piping as scheduled. Pipe shall be approved by National Sanitation Foundation (NSF) for potable water.

b. Provide Type 1, Grade 1, Polyvinyl Chloride Pipe conforming to requirements of current ASTM Specification D-2665 for DWV piping as scheduled. Cellular core PVC piping will not be approved.

c. Pipe for pressure piping shall have plain ends for socket type fittings.

d. Pipe by Chemtrol, Charlotte, Tyler or equal.

4. Copper Tube:

a. Provide hard temper copper water tube conforming to requirements of current ASTM Specification B-88. Tubing shall be Type K, L or M as listed in schedule.

b. Tubing joints shall be soldered or brazed, See schedule for joining method to be used.

c. Pipe by Cerro, Chase, Mueller, Revere Copper or equal.

2.3 PIPING FITTINGS:

A. Piping fittings used throughout project shall be proper type for installation method used and shall be compatible with piping system materials. Fittings listed in piping material schedule shall conform to the following specifications:

1. Carbon Steel Welding Fittings:

a. Provide Carbon Low Alloy Seamless Steel Welding Fittings conforming to current ANSI Standard B16.9 and ASTM Specification A234.

b. Fittings by Anvil, Midwest or equal.

2. Branch Connection Welding Fittings:

a. Provide carbon steel Weldolet fittings conforming to ANSI Standards B16.9, B16.11, B31.1.0 and ASTM Specification Al 05 grade 11.

b. Fittings by Bonney Forge or equal.

3. Branch Connection, Welding to Screwed Fitting:

a. Provide carbon steel Threadolet fitting conforming to ANSI Standards B16.9, B16.1 1, B31.1 and ASTM Specification A105 Grade 11.

b. Fittings by Bonney Forge or equal.

CJD Engineering LLC 2225 W. Chesterfield Blvd., Suite. 200 Springfield, MO 65807 (417) 877-1700 Fax: (417) 324-7735

4. Carbon Steel Flanges:

   a. Provide carbon steel flanges conforming to ASTM Specification A181 Grade 1 and ANSI Standard B16.5.

   b. Flanges by Anvil, Midwest or equal.

5. Malleable Iron Screwed Fittings:

   a. Provide screwed malleable iron fittings conforming to ANSI Standard B16.3, B2.1 and ASTM Specification A-47 grade 32510.

   b. Fittings by Crane, Anvil, Stockham or equal.

6. Cast Iron Screwed Fittings:

   a. Provide screwed cast iron fittings conforming to ANSI Standard B16.4, B2.1, and ASTM Specification A-126, Class A.

   b. Fittings by Crane, Anvil, Stockham or equal.

7. Wrought Copper Fittings:

   a. Provide wrought solder joint copper tube fitting conforming to ANSI Standard B16.22.

   b. Fittings by Chase, Nibco or equal.

8. Cast Bronze Fittings:

   a. Provide cast bronze solder joint fittings conforming to ANSI Standard B16.18.

   b. Fittings by Chase, Nibco or equal.

9. PVC, DWV Fittings:

   a. Provide PVC, DWV socket fittings conforming to ASTM D-3311 and D-2661.

   b. Solvent cement of socket fittings shall conform to ASTM D-2235.

   c. Fittings by Chemtrol, Charlotte, Tyler or equal.

2.4 INSULATING UNIONS AND FLANGES:

A. Provide insulating unions and flanges conforming to following specifications and plainly and permanently marked with manufacturer's name and pressure class rating. Unions and flanges shall be as follows:

1. Iron or steel pipe to copper pipe:

   a. Provide Epco dielectric union or flange with screwed or solder joint as required. Union shall have 250 PSI rating and flange 175 PSI rating at 190 degrees F.

2.5 STRAINERS:

CJD Engineering LLC 2225 W. Chesterfield Blvd., Suite. 200 Springfield, MO 65807 (417) 877-1700 Fax: (417) 324-7735

A. General: Provide Zurn "Y" type self-cleaning strainers with FIPT blow-off outlet, flanges or screwed end with pressure rating as required by piping system. Provide strainers with removable stainless steel or monel screens with perforations as follows:

TYPE OF SERVICE	STRAINERS SIZE, INCHES ¼ to 2	2 ½ to 6	8 to 24
Water	.005	1/16	1/8

B. Equivalent strainers by Armstrong, Metraflex, Trane, Nibco, Victaulic or Spirax Sarco.

2.6 UNIONS:

A. Provide Stockham brass seat unions of material and pressure rating required by piping system.

B. Equivalent union by Metraflex, Grinnell or equal.

PART 3 - EXECUTION

3.1 PIPING IDENTIFICATION:

A. Identify piping in mechanical rooms, open pipe chases, tunnels, and other places where piping is accessible for operation and maintenance by painting with identification colors and with pressure sensitive pipe markers.

B. Place piping markers so they can be easily read from operating position and floor.

C. Mark piping with marker and a 3-inch wide bank of identification color around circumference of pipe in lieu of painting complete pipe or pipe covering.

3.2 STRAINERS:

A. Install strainers upstream from automatic control valves, steam traps and pumps. Where strainers are an integral part of these items or incorporated in accessory equipment directly upstream, individual line strainers will not be required. Strainers shall be same size as piping. Provide strainers with proper isolation and blow down valves to allow basket removal for cleaning.

3.3 UNIONS:

A. Provide unions or flanged joint in each line preceding connections to equipment or valves requiring maintenance.

B. Where piping systems of dissimilar materials are jointed together provide proper insulating union as specified under this specification.

3.4 PIPING INSTALLATION:

A. Pipe sizes indicated on plans and as specified refer to nominal size in inches for steel pipe, cast iron pipe and copper tubing, unless otherwise indicated. Pipes are sized to nearest 1/2". In no case shall piping smaller than size specified be used.

CJD Engineering LLC 2225 W. Chesterfield Blvd., Suite. 200 Springfield, MO 65807 (417) 877-1700 Fax: (417) 324-7735

B. Contractor shall provide and be responsible for proper location of pipe sleeves, hangers, supports and inserts. Install hangers, supports, inserts, etc., as recommended by manufacturer and as specified and detailed on drawings. Verify construction types and provide proper hangers, inserts and supports in accordance with manufacturers load ratings and provide for thermal expansion of piping without exceeding allowable stress on piping or supports. Provide solid type hangers and supports where pipe travel exceeds manufacturers recommendations for fixed hanger and supports. Provide copper plated hangers and supports for suspension of uninsulated copper tubing lines.

C. Install all piping parallel with building lines and parallel with other piping to obtain a neat and orderly appearance of piping system. All piping shall be concealed unless noted otherwise. Secure piping with approved anchors and provide guides where required to insure proper direction of piping expansion. Piping shall be installed so that allowable stress for piping, valves and fittings used are not exceeded during normal operation or testing of piping system.

D. Provided piping materials and wall thickness for specific piping systems as listed in piping schedules on drawings. Steel piping systems 2-1/2" under shall be threaded pipe and fittings. Steel pipe systems 3" and above shall be weld end pipe and fittings unless required otherwise by Code.

E. Provide unions or flanged joints in each pipe line preceding connections to equipment to allow removal for repair or replacement. Provide all screwed end valves with union adjacent to valve unless valve can be otherwise easily removed from line. Provide unions on identical sizes of equipment for which one replacement item to be installed between unions without making any piping changes.

F. Piping fitting materials for specific piping systems shall be as listed in piping schedule. Fittings shall be approved factory made type with threaded or weld ends as required. Fitting pressures and temperature ratings shall be equal to or exceed maximum operating temperature and working pressure of piping system. No mitered or field fabricated pipe fittings will be permitted.

G. All pipe threads shall meet ANSI Standard B2.1 for taper threads. Lubricate pipe threads with Astroseal teflon thread sealant and lubricating compound applied full strength. Powdered or made up compound will not be permitted. Pipe thread compound shall be applied only to male pipe threads.

H. Welded pipe joints shall be made by qualified welding procedures and welders. Welding electrodes shall be type and material recommended by electrode manufacturer for materials to be welded. All pipe fitting ends shall be beveled a minimum of 30 degrees prior to welding.

I. Brazed socket type joints shall be made with suitable brazing alloys. Minimum socket depth shall be sufficient for intended service. Brazing alloy shall be end fed into socket and shall fill completely annular clearance between socket and pipe or tube. Brazed joints depending solely upon a fillet rather than a socket type joint will not be acceptable.

J. Soft soldered socket type joints shall be made in with 95-5 tin-antimony solder as required by temperature and pressure rating of piping system. Soldered socket joints shall be limited to systems containing nonflammable and non-toxic fluids. Soldered socket-type joints shall not be used on piping systems subject to shock or vibration. Soldered joints depending solely upon a fillet rather than a socket-type joint will not be acceptable.

K. Make changes in piping size and direction with approved factory made fittings. Steel pipe and fittings 2-1/2" and smaller shall be threaded type, pipe and fittings 3" and larger shall be weld type. Provide fittings suitable for at least 125 PSI working pressure or of pressure rating required for maximum working pressure of system whichever is greater.

3.5 TESTING PROCEDURES:

A. Test all lines and systems before they are insulated, painted or concealed by construction or backfilling. Provide fuel, water, electricity, materials, labor and equipment required for tests.

B. Where entire system can not be tested before concealment, test system in sections. Upon completion, each system shall be tested as an entire system.

C. Repair or replace defects, leaks and materials failures revealed by tests and then retested until satisfactory. Make repairs with new materials.

D. Verify that system components are rated for maximum test pressures to be applied. Where specified test pressures exceed component ratings remove or isolate components from system during tests.

E. Test methods and pressures shall be as follows:

1. Hydrostatic Test (Closed Systems):

   a. Hydrostatic test shall be performed using clean unused domestic water. Test pressures shall be as scheduled for system or 150% of operating pressure where not specified.

2. Hydrostatic Test (Open System):

   a. Test entire system with 10 foot head of water. Where system is tested in sections each joint in building except uppermost 10 feet of system shall be submitted to at least 10 feet head of water. Water shall be held in system for 15 minutes before inspection starts. System shall hold test pressure without leaks.

3. Pneumatic Test:

   a. Test entire system with compressed air. Systems operating above 2 PSI shall be tested at 75 PSI or 150% of operating pressure or whichever is greater.

   b. Allow at least 1 hour after test pressure has been applied before making initial test.

   c. During test, completely isolate entire system from compressor or other sources of air pressure,

4. Pressure Relief and Safety Valve:

   a. Before installation, test pressure temperature, and safety relief valves to confirm relief settings comply with specifications.

   b. Tag items that pass test with date of test, observed relief pressure setting and inspector's signature.

   c. Items installed in systems without test tag attached will be rejected.

F. All systems shall hold scheduled test pressures for specified time without loss of initial test pressure.

G. Upon completion of testing submit five copies of a typewritten report to A/E. Report shall list systems tested, test methods, test pressures, holding time and all failures with corrective action taken.

H. For test pressures see Piping Material Schedule on drawings.

CJD Engineering LLC 2225 W. Chesterfield Blvd., Suite. 200 Springfield, MO 65807 (417) 877-1700 Fax: (417) 324-7735

3.6 PIPING PROTECTIVE COATING:

A. Prepare and coat field made pipe joints and make coating repairs according to manufacturer's recommendation. Cover joints with shrinkable polyethylene sleeve. Coated piping passing through pipe sleeve shall have double thickness coating through sleeve.

END OF SECTION 221400

CJD Engineering LLC 2225 W. Chesterfield Blvd., Suite. 200 Springfield, MO 65807 (417) 877-1700 Fax: (417) 324-7735

SECTION 223000 – FIRE PROTECTION SYSTEMS

PART 1 - GENERAL

1.1 RELATED DOCUMENTS

A. Drawings and general provisions of the Contract, including General and Supplementary Conditions, Division 01 Specification Sections, section 220100 - General Mechanical Requirements, section 220500 – Basic Mechanical Materials and Methods shall apply to this Section.

1.2 GENERAL

A Hereinafter, all reference to "this contractor", "the contractor", etc., unless specifically preceded by a trade category, shall apply to the Sprinkler Contractor.

1.3 SCOPE

A. Furnish all design, labor, materials, fabrication, equipment, and services necessary to provide a complete and operational automatic fire sprinkler system as specified herein and as required for satisfactory operation of the system.

B. The sprinkler system shall be installed in accordance with the latest edition of NFPA. This requirement does not relieve the contractor from meeting the requirements set by Factory Mutual (if required by owner). All flow indicators, gongs, horns, etc. shall be included as part of this contract.

C. Standpipe systems accommodating fire department connections within stairwells shall be designed and installed under NFPA 14. Contractor/engineer shall coordinate for additional hose cabinets and risers as required for compliance with applicable codes and standards.

D. Provide an automatic dry-pipe sprinkler system in all unconditioned spaces were fire sprinkler is required per NFPA such as the exterior canopies, etc. Coordinate with Electrical Contractor to provide power to dry-pipe systeem air compressor. Contractor shall be responsible for increases in conduit, conductor, and equipment as required for the dry-pipe system.

1.4 FEES AND PERMITS

A. The contractor shall secure and pay for all permits, licenses and inspections necessary in conjunction with this work. In addition, the contractor shall pay for all tap fees and equipment costs associated with the fire sprinkler system.

1.5 PROTECTION OF WORK

A. Sprinkler Contractor shall take the necessary precautions required to protect his work as well as the work of other trades against any damages.

1.6 SUBMITTALS AND APPROVALS

A. All material submitted shall be contained in brochure type binders, clearly labeled and identified. Each submittal shall be complete, with all items listed in schedule form, showing type, manufacturer, catalog number, finish shop drawings or descriptive literature for the purpose of identifying the equipment and engineer's reference number. Failure to comply with these requirements will result in return of submittal for resubmission.

CJD Engineering LLC 2225 W. Chesterfield Blvd., Suite. 200 Springfield, MO 65807 (417) 877-1700 Fax: (417) 324-7735

B. Contractor shall submit scaled layout drawings including, but not limited to, head locations, pipe sizes, locations, elevations, and slopes of horizontal runs, wall and floor penetrations, and connections. Indicate interface and spatial relationships between piping and proximate equipment. Shop hanger locations. Plans shall be submitted prior to A/E for head locations approval.

C. At project closeout, submit 3, 1/8" scaled, dimensioned, record drawings to the A/E of installed fire protection piping and equipment.

1.7 LOCAL CONDITIONS

A. The sprinkler system shall be a complete system as required by local authorities. All wiring required for the system shall be provided by the sprinkler contractor and shall be included in the submittal package. Submit to Agency having jurisdiction for approval. Submit one approved copy, bearing stamp and/or signature of Agency having jurisdiction, before proceeding with installation.

B. Submit certification upon completion of fire protection piping work which indicates that work has been tested in accordance with NFPA 13 and NFPA 14, and also that system is operational, complete, and has no defects.

1.8 CODES AND ORDINANCES

A. The Contractor shall comply with all requirements, regulations, code, ordinance, ruling or Fire Underwriters' requirements, NFPA, and Factory Mutual applicable to this class of work. Furthermore, they shall include but shall not be limited to, codes listed in other sections of these specification.

B. Provide fire protection products in accordance with UL standards: provide UL label on each product.

C. Install fire protection systems in accordance with local regulations of fire department or fire marshal. Comply with local Fire Department/Marshal regulations for sizes, threading and arrangement of connections for fire department equipment to standpipe systems.

1.9 QUALIFICATION OF SPRINKLER CONTRACTOR

A. Fire protection work shall be installed by a firm with at least 3 years of successful installation experience on projects with the fire protection work similar to that required for project.

B. Designs and calculations shall be performed under direct supervision of and properly sealed and signed by a Registered Professional Engineer licensed in the state in which the project is located.

1.10 WATER SERVICE

A. Contractor shall include in his bid the installation of the required water service line at the location(s) indicated on the drawing. The contractor must consult the City Water department and local authorities, provide necessary materials and labor to conform with all local requirements and include the cost of all work and materials in connection with the service. This contractor shall perform necessary hydraulic calculations required to size the line in accordance with applicable provisions of NFPA including NFPA 13.

1.11 DESIGN AND CALCULATION

A. Contractor shall perform necessary calculations required for proper design and installation of the sprinkler system for the entire building (existing and addition). All design calculations and layout of the sprinkler system network shall be based on the Specifications and accompanying drawings. Request for HVAC duct and equipment relocations shall be submitted to the Engineer one week before the bid opening date. No sprinkler pipe penetration will be allowed through HVAC duct system.

B. Contractor shall perform fire flow test on two hydrants on water main that shall be tapped for new fire service. Test shall be performed per NFPA 291 and witnessed by local fire authorities and a copy of the test results shall be submitted to the Architect and Engineer for their records.

1.12 ELECTRICAL REQUIREMENTS

A. Electric tamper switches may not be shown but are required wherever a shutoff valve is installed in the sprinkler system. The sprinkler contractor shall be responsible for providing the tamper switch and associated wiring to connect to the fire alarm system. All wiring shall be in accordance with Division 26.

B. Electric flow switches may not be shown but are required. The sprinkler contractor shall be responsible for providing the flow switch and associated wiring to connect to the fire alarm system. All wiring shall be in accordance with Division 26.

C. All flow switches, gongs, horns, etc. required by the local code officials or authority with jurisdiction shall be included. All wiring shall be in accordance with Division 26.

PART 2 - PRODUCTS

2.1 ACCEPTABLE MANUFACTURERS

A. Viking, Reliable or approved equal.

2.2 EQUIPMENT AND MATERIALS

A. All materials and equipment furnished as part of this contract shall be UL listed, Factory Mutual approved and in compliance with applicable provisions of the NFFA.

B. No plastic piping will be allowed.

2.3 SPRINKLER HEADS

A. Unless indicated otherwise, sprinkler heads shall be as follows:

1. Exposed Areas Without Ceiling Brass, Unplated Sprinklers.

2. Finished Ceiling Areas: Concealed mount brass, unplated sprinklers with white cover plate and trim.

B. Temperature rating of fusible plug or link of sprinklers shall be appropriate for the ambient conditions in the immediate areas.

2.4 SPARE HEADS

A. Contractor shall furnish spare sprinkler heads identical to each type installed in accordance with the following schedule:

CJD Engineering LLC 2225 W. Chesterfield Blvd., Suite. 200 Springfield, MO 65807 (417) 877-1700 Fax: (417) 324-7735

# Installed	of Spares
Less than 300	6
More than 300	12

B. Spare sprinkler head shall be mounted in emergency sprinkler cabinet. Cabinet shall be located in Mechanical room. See drawings for location.

2.5 SIAMESE CONNECTIONS

A. Contractor shall provide Siamese type connection through exterior building wall where shown on plan. Coordinate the exact location, pipe threads and fittings with the local fire department to ensure exact match.

PART 3 - EXECUTION

3.1 TESTING AND FLUSHING OF SYSTEM

A. All piping shall be hydrostatically tested for a period of two (2) hours at not less than 200 psi pressure. If leaks appear, lines shall be drained, leaks repaired and test repeated. No piping shall be concealed in any manner before being tested and approved.

B. Tests shall be made in the presence of an inspector from the authorities having jurisdiction. The owner shall be notified of time of all tests in advance of the date.

3.2 MISCELLANEOUS EXECUTION

A. All sprinkler heads in the main sales area shall be positioned approximately half way between rows of lights and at approximately center of ceiling tile. It shall be the responsibility of the sprinkler designing engineer to accommodate this re requirement. Failure to comply with this requirement will result in return of submitted design for resubmission.

B. All piping shall be installed within 6" of the structure. Offset around obstacles as necessary and return piping to within 6" of structure as close to offset as possible. Branch piping shall be run between concrete stem or steel joists in rooms without ceilings.

C. Sprinkler heads shall be installed in the center of ceiling tiles.

END OF SECTION 223000

CJD Engineering LLC 2225 W. Chesterfield Blvd., Suite. 200 Springfield, MO 65807 (417) 877-1700 Fax: (417) 324-7735

SECTION 224100 – PLUMBING FIXTURES

PART 1 - GENERAL

1.1 RELATED DOCUMENTS

A. Drawings and general provisions of the Contract, including General and Supplementary Conditions, Division 01 Specification Sections, section 220100 - General Mechanical Requirements, section 220500 – Basic Mechanical Materials and Methods shall apply to this Section.

PART 2 - PRODUCTS

2.1 Equivalent fixtures and accessories by the following manufacturers will be acceptable.

A. Toilet Seats: Church, Olsonite, Toto, or Beneke.

B. Fittings and Supports: Josam, Smith, Zurn or Wade.

C. Traps, Supplies and Stops: Dearborn, Sanitary Dash or as specified under plumbing fixtures.

D. Supplies and Stops: Dearborn Figure No. 2407CW 1-1/2" compression inlet with angle compression stop and 3/8" O.D. risers in length required. Provide deep chrome plated brass escutcheons.

E. Traps: Dearborn #FS510 (1-1/2") and/or #FS507 (1-1/4") cast brass body with clean-out "P" trap. Provide deep chrome plated brass escutcheon with set screw.

2.2 Refer to **PLUMBING FIXTURE SCHEDULE** on construction drawings for fixture types to be installed under this section.

PART 3 - EXECUTION

3.1 PLUMBING FIXTURES:

A. Provide plumbing fixtures as shown on drawings and as specified complete including piping and connections. China fixtures shall be of best grade vitreous ware, without pit holes or blemishes and outlines shall be generally true. Architect reserves right to reject any piece which in his opinion is faulty. Fixtures fitting against walls shall have ground backs. Exposed piping and fitting shall be chrome plated.

B. Set fixtures true and level with all necessary supports for fixtures installed before plastering is done. Nipples through wall to fixture connection shall be chrome plated brass. Contractor may use copper stubouts to stops under lavatories provided deep escutcheons are used and no copper is visible in lieu of chrome nipples.

3.2 FIXTURE INSTALLATION

A. Assemble fixtures, trim, fittings, and other components according to manufacturers' written instructions.

B. For wall-hanging fixtures, install off-floor supports affixed to building substrate.
   1. Use carrier supports with waste fitting and seal for back-outlet fixtures.
   2. Use carrier supports without waste fitting for fixtures with tubular waste piping.
   3. Use chair-type carrier supports with rectangular steel uprights for accessible fixtures.

CJD Engineering LLC 2225 W. Chesterfield Blvd., Suite. 200 Springfield, MO 65807 (417) 877-1700 Fax: (417) 324-7735

C. Install back-outlet, wall-hanging fixtures onto waste fitting seals and attach to supports.

D. Install floor-mounting fixtures on closet flanges or other attachments to piping or building substrate.

E. Install wall-hanging fixtures with tubular waste piping attached to supports.

F. Install counter-mounting fixtures in and attached to casework.

G. Install fixtures level and plumb according to manufacturers' written instructions and roughing-in drawings.

H. Install water-supply piping with stop on each supply to each fixture to be connected to water distribution piping. Attach supplies to supports or substrate within pipe spaces behind fixtures. Install stops in locations where they can be easily reached for operation.
   1. Exception: Use ball, gate, or globe valve if stops are not specified with fixture. Refer to Section 221100 for general-duty valves.

I. Install trap and tubular waste piping on drain outlet of each fixture to be directly connected to sanitary drainage system.

J. Install tubular waste piping on drain outlet of each fixture to be indirectly connected to drainage system.

K. Install flushometer valves for accessible water closets and urinals with handle mounted on wide side of compartment. Install other actuators in locations that are easy for people with disabilities to reach.

L. Install toilet seats on water closets.

M. Install faucet-spout fittings with specified flow rates and patterns in faucet spouts if faucets are not available with required rates and patterns. Include adapters if required.

N. Install water-supply, flow-control fittings with specified flow rates in fixture supplies at stop valves.

O. Install faucet, flow-control fittings with specified flow rates and patterns in faucet spouts if faucets are not available with required rates and patterns. Include adapters if required.

P. Install shower, flow-control fittings with specified maximum flow rates in shower arms.

Q. Install traps on fixture outlets.
   1. Exception: Omit trap on fixtures with integral traps.

R. Install disposer in outlet of sinks indicated to have disposer. Install switch where indicated or in wall adjacent to sink if location is not indicated.

S. Install escutcheons at piping wall ceiling penetrations in exposed, finished locations and within cabinets and millwork. Use deep-pattern escutcheons if required to conceal protruding fittings. Refer to Division 15 Section "Basic Mechanical Materials and Methods" for escutcheons.

T. Set shower receptors service basins in leveling bed of cement grout.

CJD Engineering LLC 2225 W. Chesterfield Blvd., Suite. 200 Springfield, MO 65807 (417) 877-1700 Fax: (417) 324-7735

U. Seal joints between fixtures and walls, floors, and counters using sanitary-type, one-part, mildew-resistant, silicone sealant. Match sealant color to fixture color. Refer to Division 07 Section "Joint Sealants" for sealant and installation requirements.

3.3 CONNECTIONS

A. Connect water supplies from water distribution piping to fixtures.

B. Connect drain piping from fixtures to drainage piping.

C. Supply and Waste Connections to Plumbing Fixtures: Connect fixtures with water supplies, stops, risers, traps, and waste piping. Use size fittings required to match fixtures. Connect to plumbing piping.

D. Supply and Waste Connections to Fixtures and Equipment Specified in Other Sections: Connect fixtures and equipment with water supplies, stops, risers, traps, and waste piping specified. Use size fittings required to match fixtures and equipment. Connect to plumbing piping.

3.4 PROTECTION

A. Provide protective covering for installed fixtures and fittings.

B. Do not allow use of fixtures for temporary facilities unless approved in writing by Owner.

END OF SECTION 224100

CJD Engineering LLC 2225 W. Chesterfield Blvd., Suite. 200 Springfield, MO 65807 (417) 877-1700 Fax: (417) 324-7735

SECTION 224300 – PLUMBING SPECIALTIES

PART 1 - GENERAL

1.1 RELATED DOCUMENTS

A. Drawings and general provisions of the Contract, including General and Supplementary Conditions, Division 01 Specification Sections, section 220100 - General Mechanical Requirements, section 220500 – Basic Mechanical Materials and Methods shall apply to this Section.

PART 2 - PRODUCTS

2.1 Refer to **PLUMBING FIXTURE SCHEDULE** on construction drawings for fixture types to be installed under this section.

2.2 FLOOR DRAINS, FLOOR SINKS, ETC.:

A. All floor drains in finished areas shall have chrome plated strainers.

B. Provide each drain that does not have an integral "P" trap with a cast iron "P" trap in connecting piping.

C. See Architectural plans for floor drain top elevations and floor drainage,

2.3 CLEANOUTS:

A. Wall Type Finished Areas: PVC cleanout "T" with cleanout plug and stainless steel access cover.

B. Wall Type Unfinished Areas: Cast iron cleanout lee with countersunk plug.

C. Floor Type Hard Flooring Areas: Round chrome plated scoriated cover.

D. Floor Type Carpet Areas: Nickel bronze top and carpet clamp.

E. Verify floor materials used from Architectural plans.

2.4 SHOCK ABSORBERS:

A. Provide Josam Absorbotron shock absorbers or approved equal on all individual plumbing fixtures and plumbing fixture batteries sized in accordance with the Plumbing and Drainage Institute "Standard P.D.I. WH201 ". Equivalent shock absorbers by Zurn, Wade, Sioux Chief or J.R. Smith.

PART 3 - EXECUTION

3.1 INSTALLATION

A. Install backflow preventers in each water supply to mechanical equipment and systems and to other equipment and water systems that may be sources of contamination. Comply with authorities having jurisdiction.
   1. Locate backflow preventers in same room as connected equipment or system.
   2. Install drain for backflow preventers with atmospheric-vent drain connection with air-gap fitting, fixed air-gap fitting, or equivalent positive pipe separation of at least two pipe diameters in drain piping and pipe to floor drain. Locate air-gap device attached to or under backflow preventer. Simple air breaks are not acceptable for this application.

CJD Engineering LLC 2225 W. Chesterfield Blvd., Suite. 200 Springfield, MO 65807 (417) 877-1700 Fax: (417) 324-7735

3. Do not install bypass piping around backflow preventers.

B. Install cleanouts in aboveground piping and building drain piping according to the following, unless otherwise indicated:
   1. Size same as drainage piping up to NPS 4 (DN 100). Use NPS 4 (DN 100) for larger drainage piping unless larger cleanout is indicated.
   2. Locate at each change in direction of piping greater than 45 deg rees.
   3. Locate at minimum intervals of 50 feet (15 m) for piping NPS 4 (DN 100) and smaller and 100 feet (30 m) for larger piping.
   4. Locate at base of each vertical soil and waste stack.

C. Install cleanout deck plates with top flush with finished floor, for floor cleanouts for piping below floors.

D. Install cleanout wall access covers, of types indicated, with frame and cover flush with finished wall, for cleanouts located in concealed piping.

E. Install flashing flange and clamping device with each stack and cleanout passing through floors with waterproof membrane.

F. Install vent flashing sleeves on stacks passing through roof. Secure over stack flashing according to manufacturer's written instructions.

G. Install floor drains at low points of surface areas to be drained as indicated on construction rdawings. Set grates of drains flush with finished floor, unless otherwise indicated.
   1. Position floor drains for easy access and maintenance.
   2. Block out floor prior to pouring of concrete and then level floor drain after pour is set, remove forms and grout hole level.

H. Install floor-drain flashing collar or flange so no leakage occurs between drain and adjoining flooring. Maintain integrity of waterproof membranes where penetrated.

I. Install individual traps for floor drains connected to sanitary building drain, unless otherwise indicated.

J. Fasten wall-hanging plumbing specialties securely to supports attached to building substrate if supports are specified and to building wall construction if no support is indicated.

K. Fasten recessed-type plumbing specialties to reinforcement built into walls.

L. Install wood-blocking reinforcement for wall-mounting and recessed-type plumbing specialties.

M. Install individual shutoff valve in each water supply to plumbing specialties. Use ball, gate, or globe valve if specific valve is not indicated. Install shutoff valves in accessible locations. Refer to Division 15 Section "Valves" for general-duty ball, butterfly, check, gate, and globe valves.

N. Install escutcheons at wall, floor, and ceiling penetrations in exposed finished locations and within cabinets and millwork. Use deep-pattern escutcheons if required to conceal protruding pipe fittings.

CJD Engineering LLC 2225 W. Chesterfield Blvd., Suite. 200 Springfield, MO 65807 (417) 877-1700 Fax: (417) 324-7735

3.2 PROTECTION

A. Protect drains during remainder of construction period to avoid clogging with dirt and debris and to prevent damage from traffic and construction work.

B. Place plugs in ends of uncompleted piping at end of each day or when work stops.

END OF SECTION 224300

CJD Engineering LLC 2225 W. Chesterfield Blvd., Suite. 200 Springfield, MO 65807 (417) 877-1700 Fax: (417) 324-7735

SECTION 224850 – WATER HEATERS

PART 1 - GENERAL

1.1 RELATED DOCUMENTS

A. Drawings and general provisions of the Contract, including General and Supplementary Conditions, Division 01 Specification Sections, section 220100 - General Mechanical Requirements, section 220500 – Basic Mechanical Materials and Methods shall apply to this Section.

1.2 REGULATORY REQUIREMENTS

A. ASME Compliance: Where indicated, fabricate and label commercial water heater storage tanks to comply with ASME Boiler and Pressure Vessel Code: Section VIII, Division 1.

B. Comply with NSF 61, "Drinking Water System Components - Health Effects; Sections 1 through 9," for all components that will be in contact with potable water.

C. Water heaters shall meet ASHRAE/IESNA 90.1-1999.

PART 2 - PRODUCTS

2.1 COMMERCIAL ELECTRIC WATER HEATERS

A. Electric water heaters with electric heater input exceeding 58.6 kW and/or with storage tank volume exceeding 120 gallons shall be ASME rated.

B. Double element models shall be listed under UL Standard 1453. Single element models shall be listed under UL Standard 174.

C. Electric water heaters shall be equipped with the following:

1. Direct immersion threaded heating elements.
2. Anode rods for protection against electrolytic corrosion.
3. Porcelainized glasslined tank.
4. Foam insulated tank.
5. Factory mounted ASME temperature and pressure safety valve.

D. Electric water heaters shall be rated for a maximum hydrostatic working pressure of 150 PSIG.

E. Electric water heaters shall be provided with a 3 year factory warranty on the tank and heating elements, and 1 year factory warranty on all component parts.

F. Pre-bid approved equivalent water heaters by Lochinvar, A. O. Smith, Bradford White, State, Rheem.

PART 3 - INSTALLATION

3.1 Install commercial water heaters on concrete bases. Omit concrete bases for water heaters installed on a stand, bracket, or suspended platform.

3.2 Install water heaters level and plumb, according to layout drawings, original design, and referenced

CJD Engineering LLC 2225 W. Chesterfield Blvd., Suite. 200 Springfield, MO 65807 (417) 877-1700 Fax: (417) 324-7735

standards. Maintain manufacturer's recommended clearances. Arrange units so controls and devices needing service are accessible.

3.3 Install piping adjacent to water heaters to allow service and maintenance. Arrange piping for easy removal of water heaters.

3.4 Install thermometer on outlet piping of water heaters where indicated on plans. Refer to Division 22 Section "Meters and Gages" for thermometers.

3.5 Fill water heaters with water. Charge expansion tanks with air.

3.6 Install piping-type heat traps on inlet and outlet piping of water heater storage tanks without integral or fitting-type heat traps.

3.7 Coordinate grounding of the water heater with the electrical contractor.

END OF SECTION 224850

CJD Engineering LLC 2225 W. Chesterfield Blvd., Suite. 200 Springfield, MO 65807 (417) 877-1700 Fax: (417) 324-7735

SECTION 229300 – PLUMBING SYSTEMS COMMISSIONING

PART 1 - GENERAL

1.1 Genral Contractor shall contract with Commissing Agent (CA). Mechanical Contractor shall not include Commissioning Agent work in bid. The CA has overall responsibility for planning and coordinating the commissioing process. Mechanical Contractor shall still be required to work with all parties including Plumbing Contractor, Testing and Balancing (TAB) Contractor, Temperature Controls Contractor and Commissioning Agent until total Commissioning work is deemed satisfactory to all parties.

1.2 CONTRACTORS' RESPONSIBILITIES

A. The mechanical division contractor's responsibilities are defined in Section 019113 of the specifications. These responsibilities apply to all specialty sub-contractors and major equipment suppliers within this division. Each contractor and supplier shall review Section 019113 and their bids shall include for carrying out the work described, as it applies to each Section within this division's specifications, individually and collectively. Contractor shall work with Testing, Adjusting and Balancing contractor to adjust air/water/controls systems after initial installation to achieve air/water flows as indicated on the plans and schedules.

END OF SECTION 229300

CJD Engineering LLC 2225 W. Chesterfield Blvd., Suite. 200 Springfield, MO 65807 (417) 877-1700 Fax: (417) 324-7735

SECTION 229500 - TESTING, ADJUSTING, AND BALANCING

PART 1 - GENERAL

1.1 RELATED DOCUMENTS

A. Drawings and general provisions of the Contract, including General and Supplementary Conditions, Division 01 Specification Sections, section 220100 - General Mechanical Requirements, section 220500 – Basic Mechanical Materials and Methods shall apply to this Section.

1.2 SUMMARY

A. Testing and Balancing (TAB) Firm
   1. The TAB firm has overall responsibility for planning and coordinating the testing and balancing process. However, TAB and commissioning involves all parties to the design and construction process, including the mechanical contractor, and all specialty sub-contractors within the mechanical sections such as sheet metal, piping, refrigeration, water treatment, and controls, plus major equipment suppliers as required.

B. CONTRACTORS' RESPONSIBILITIES
   1. The contractor's responsibilities are defined in the sections below. These responsibilities apply to all specialty sub-contractors and major equipment suppliers within this division. Each contractor and supplier shall review this section and their bids shall include for carrying out the work described, as it applies to each Section within this division's specifications, individually and collectively.

C. Air Systems:
   1. Constant-volume air systems.
   2. Variable-air-volume systems.

D. Plumbing Piping Systems:
   1. Domestic hot water recirculation system systems.

E. HVAC equipment quantitative-performance settings.

F. Verifying that automatic control devices are functioning properly.

G. Reporting results of activities and procedures specified in this Section.

1.3 SUBMITTALS

A. Qualification Data: Within 30 days from Contractor's Notice to Proceed, submit 4 copies of evidence that TAB firm and this Project's TAB team members meet the qualifications specified in "Quality Assurance" Article.

B. The following balancing contractors will be accepted for this project. No other contractors shall be allowed unless approved by engineer prior to bid.

   1. CJD Engineering.
   2. Systems Testing and Analysis.
   3. Testing & Balancing Company of the Ozarks.

C. Certified TAB Reports: Submit two copies of reports prepared, as specified in this Section, on approved forms certified by TAB firm.

D. Warranties specified in this Section.

1.4 QUALITY ASSURANCE

A. TAB Firm Qualifications: Engage a TAB firm certified by either AABC or NEBB.

B. Certification of TAB Reports: Certify TAB field data reports. This certification includes the following:
1. Review field data reports to validate accuracy of data and to prepare certified TAB reports.
2. Certify that TAB team complied with approved TAB plan and the procedures specified and referenced in this Specification.

C. TAB Report Forms: Use standard forms from AABC's "National Standards for Testing and Balancing Heating, Ventilating, and Air Conditioning Systems or NEBB's "Procedural Standards for Testing, Adjusting, and Balancing of Environmental Systems."

D. Instrumentation Type, Quantity, and Accuracy: As described in AABC's "National Standards for Testing and Balancing Heating, Ventilating, and Air Conditioning Systems or NEBB's "Procedural Standards for Testing, Adjusting, and Balancing of Environmental Systems," Section II, "Required Instrumentation for NEBB Certification."

E. Instrumentation Calibration: Calibrate instruments at least every six months or more frequently if required by instrument manufacturer.
1. Keep an updated record of instrument calibration that indicates date of calibration and the name of party performing instrument calibration.

1.5 COORDINATION

A. Coordinate the efforts of factory-authorized service representatives for systems and equipment, HVAC controls installers, and other mechanics to operate HVAC systems and equipment to support and assist TAB activities.

B. Perform TAB after leakage and pressure tests on air and water distribution systems have been satisfactorily completed.

1.6 WARRANTY

A. National Project Performance Guarantee: Provide a guarantee on AABC's or NEBB forms stating that AABC will assist in completing requirements of the Contract Documents if TAB firm fails to comply with the Contract Documents. Guarantee includes the following provisions:
1. The certified TAB firm has tested and balanced systems according to the Contract Documents.
2. Systems are balanced to optimum performance capabilities within design and installation limits.

PART 2 - PRODUCTS (Not Applicable)

PART 3 - EXECUTION

3.1 EXAMINATION

CJD Engineering LLC 2225 W. Chesterfield Blvd., Suite. 200 Springfield, MO 65807 (417) 877-1700 Fax: (417) 324-7735

A. Examine the Contract Documents to become familiar with Project requirements and to discover conditions in systems' designs that may preclude proper TAB of systems and equipment.
   1. Contract Documents are defined in the General and Supplementary Conditions of Contract.
   2. Verify that balancing devices, such as test ports, gage cocks, thermometer wells, flow-control devices, balancing valves and fittings, and manual volume dampers, are required by the Contract Documents. Verify that quantities and locations of these balancing devices are accessible and appropriate for effective balancing and for efficient system and equipment operation.

B. Examine approved submittal data of HVAC systems and equipment.

C. Examine equipment performance data including fan and pump curves. Relate performance data to Project conditions and requirements, including system effects that can create undesired or unpredicted conditions that cause reduced capacities in all or part of a system. Calculate system effect factors to reduce performance ratings of HVAC equipment when installed under conditions different from those presented when the equipment was performance tested at the factory. To calculate system effects for air systems, use tables and charts found in AMCA 201, "Fans and Systems," Sections 7 through 10; or in SMACNA's "HVAC Systems--Duct Design," Sections 5 and 6. Compare this data with the design data and installed conditions.

D. Examine system and equipment installations to verify that they are complete and that testing, cleaning, adjusting, and commissioning specified in individual Sections have been performed.

E. Examine HVAC system and equipment installations to verify that indicated balancing devices, such as test ports, gage cocks, thermometer wells, flow-control devices, balancing valves and fittings, and manual volume dampers, are properly installed, and that their locations are accessible and appropriate for effective balancing and for efficient system and equipment operation.

F. Examine systems for functional deficiencies that cannot be corrected by adjusting and balancing.

G. Examine HVAC equipment to ensure that clean filters have been installed, bearings are greased, belts are aligned and tight, and equipment with functioning controls is ready for operation.

H. Examine terminal units, such as variable-air-volume boxes, to verify that they are accessible and their controls are connected and functioning.

I. Examine plenum ceilings used for supply air to verify that they are airtight. Verify that pipe penetrations and other holes are sealed.

J. Examine heat-transfer coils for correct piping connections and for clean and straight fins.

K. Examine system pumps to ensure absence of entrained air in the suction piping.

L. Examine equipment for installation and for properly operating safety interlocks and controls.

M. Examine automatic temperature system components to verify the following:
   1. Dampers, valves, and other controlled devices are operated by the intended controller.
   2. Dampers and valves are in the position indicated by the controller.
   3. Integrity of valves and dampers for free and full operation and for tightness of fully closed and fully open positions. This includes dampers in multizone units, mixing boxes, and variable-air-volume terminals.

CJD Engineering LLC 2225 W. Chesterfield Blvd., Suite. 200 Springfield, MO 65807 (417) 877-1700 Fax: (417) 324-7735

4. Automatic modulating and shutoff valves, including two-way valves and three-way mixing and diverting valves, are properly connected.
5. Thermostats and humidistats are located to avoid adverse effects of sunlight, drafts, and cold walls.
6. Sensors are located to sense only the intended conditions.
7. Sequence of operation for control modes is according to the Contract Documents.
8. Controller set points are set at indicated values.
9. Interlocked systems are operating.
10. Changeover from heating to cooling mode occurs according to indicated values.

N. Report deficiencies discovered before and during performance of TAB procedures. Observe and record system reactions to changes in conditions. Record default set points if different from indicated values.

3.2 PREPARATION

A. Complete system readiness checks and prepare system readiness reports. Verify the following:
1. Permanent electrical power wiring is complete.
2. Plumbing systems are filled, clean, and free of air.
3. Automatic temperature-control systems are operational.
4. Equipment and duct access doors are securely closed.
5. Balance, smoke, and fire dampers are open.
6. Isolating and balancing valves are open and control valves are operational.
7. Ceilings are installed in critical areas where air-pattern adjustments are required and access to balancing devices is provided.
8. Windows and doors can be closed so indicated conditions for system operations can be met.

3.3 GENERAL PROCEDURES FOR TESTING AND BALANCING

A. Perform testing and balancing procedures on each system according to the procedures contained in AABC's "National Standards for Testing and Balancing Heating, Ventilating, and Air Conditioning Systems" or NEBB's "Procedural Standards for Testing, Adjusting, and Balancing of Environmental Systems" and this Section.

B. Cut insulation, ducts, pipes, and equipment cabinets for installation of test probes to the minimum extent necessary to allow adequate performance of procedures. After testing and balancing, close probe holes and patch insulation with new materials identical to those removed. Restore vapor barrier and finish according to insulation Specifications for this Project.

C. Mark equipment and balancing device settings with paint or other suitable, permanent identification material, including damper-control positions, valve position indicators, fan-speed-control levers, and similar controls and devices, to show final settings.

D. Take and report testing and balancing measurements in inch-pound IP units.

3.4 GENERAL PROCEDURES FOR BALANCING AIR SYSTEMS

A. Prepare test reports for both fans and outlets. Obtain manufacturer's outlet factors and recommended testing procedures. Crosscheck the summation of required outlet volumes with required fan volumes.

B. Prepare schematic diagrams of systems' "as-built" duct layouts.

CJD Engineering LLC 2225 W. Chesterfield Blvd., Suite. 200 Springfield, MO 65807 (417) 877-1700 Fax: (417) 324-7735

C. Determine the best locations in main and branch ducts for accurate duct airflow measurements.

D. Check airflow patterns from the outside-air louvers and dampers and the return- and exhaust-air dampers, through the supply-fan discharge and mixing dampers.

E. Verify that motor starters are equipped with properly sized thermal protection.

F. Check dampers for proper position to achieve desired airflow path.

G. Check for airflow blockages.

H. Check condensate drains for proper connections and functioning.

I. Check for proper sealing of air-handling unit components.

J. Check for proper sealing of air duct system.

3.5 PROCEDURES FOR CONSTANT-VOLUME AIR SYSTEMS

A. Adjust fans to deliver total indicated airflows within the maximum allowable fan speed listed by fan manufacturer.
   1. Measure fan static pressures to determine actual static pressure as follows:
      a. Measure outlet static pressure as far downstream from the fan as practicable and upstream from restrictions in ducts such as elbows and transitions.
      b. Measure static pressure directly at the fan outlet or through the flexible connection.
      c. Measure inlet static pressure of single-inlet fans in the inlet duct as near the fan as possible, upstream from flexible connection and downstream from duct restrictions.
      d. Measure inlet static pressure of double-inlet fans through the wall of the plenum that houses the fan.
   2. Measure static pressure across each component that makes up an air-handling unit, rooftop unit, and other air-handling and -treating equipment.
      a. Simulate dirty filter operation and record the point at which maintenance personnel must change filters.
   3. Measure static pressures entering and leaving other devices such as sound traps, heat recovery equipment, and air washers, under final balanced conditions.
   4. Compare design data with installed conditions to determine variations in design static pressures versus actual static pressures. Compare actual system effect factors with calculated system effect factors to identify where variations occur. Recommend corrective action to align design and actual conditions.
   5. Obtain approval from Architect for adjustment of fan speed higher or lower than indicated speed. Make required adjustments to pulley sizes, motor sizes, and electrical connections to accommodate fan-speed changes.
   6. Do not make fan-speed adjustments that result in motor overload. Consult equipment manufacturers about fan-speed safety factors. Modulate dampers and measure fan-motor amperage to ensure that no overload will occur. Measure amperage in full cooling, full heating, economizer, and any other operating modes to determine the maximum required brake horsepower.

CJD Engineering LLC 2225 W. Chesterfield Blvd., Suite. 200 Springfield, MO 65807 (417) 877-1700 Fax: (417) 324-7735

B. Adjust volume dampers for main duct, submain ducts, and major branch ducts to indicated airflows within specified tolerances.
   1. Measure static pressure at a point downstream from the balancing damper and adjust volume dampers until the proper static pressure is achieved.
      a. Where sufficient space in submain and branch ducts is unavailable for Pitot-tube traverse measurements, measure airflow at terminal outlets and inlets and calculate the total airflow for that zone.
   2. Remeasure each submain and branch duct after all have been adjusted. Continue to adjust submain and branch ducts to indicated airflows within specified tolerances.

C. Measure terminal outlets and inlets without making adjustments.
   1. Measure terminal outlets using a direct-reading hood or outlet manufacturer's written instructions and calculating factors.

D. Adjust terminal outlets and inlets for each space to indicated airflows within specified tolerances of indicated values. Make adjustments using volume dampers rather than extractors and the dampers at air terminals.
   1. Adjust each outlet in same room or space to within specified tolerances of indicated quantities without generating noise levels above the limitations prescribed by the Contract Documents.
   2. Adjust patterns of adjustable outlets for proper distribution without drafts.

3.6 PROCEDURES FOR VARIABLE-AIR-VOLUME SYSTEMS

A. Compensating for Diversity: When the total airflow of all terminal units is more than the indicated airflow of the fan, place a selected number of terminal units at a maximum set-point airflow condition until the total airflow of the terminal units equals the indicated airflow of the fan. Select the reduced airflow terminal units so they are distributed evenly among the branch ducts.

B. Pressure-Independent, Variable-Air-Volume Systems: After the fan systems have been adjusted, adjust the variable-air-volume systems as follows:
   1. Set outside-air dampers at minimum, and return- and exhaust-air dampers at a position that simulates full-cooling load.
   2. Select the terminal unit that is most critical to the supply-fan airflow and static pressure. Measure static pressure. Adjust system static pressure so the entering static pressure for the critical terminal unit is not less than the sum of terminal-unit manufacturer's recommended minimum inlet static pressure plus the static pressure needed to overcome terminal-unit discharge system losses.
   3. Measure total system airflow. Adjust to within indicated airflow.
   4. Set terminal units at maximum airflow and adjust controller or regulator to deliver the designed maximum airflow. Use terminal-unit manufacturer's written instructions to make this adjustment. When total airflow is correct, balance the air outlets downstream from terminal units as described for constant-volume air systems.
   5. Set terminal units at minimum airflow and adjust controller or regulator to deliver the designed minimum airflow. Check air outlets for a proportional reduction in airflow as described for constant-volume air systems.
      a. If air outlets are out of balance at minimum airflow, report the condition but leave outlets balanced for maximum airflow.
   6. Remeasure the return airflow to the fan while operating at maximum return airflow and minimum outside airflow. Adjust the fan and balance the return-air ducts and inlets as described for constant-volume air systems.

CJD Engineering LLC 2225 W. Chesterfield Blvd., Suite. 200 Springfield, MO 65807 (417) 877-1700 Fax: (417) 324-7735

7. Measure static pressure at the most critical terminal unit and adjust the static-pressure controller at the main supply-air sensing station to ensure that adequate static pressure is maintained at the most critical unit.
8. Record the final fan performance data.

3.7 GENERAL PROCEDURES FOR PLUMBING SYSTEMS

A. Prepare test reports with pertinent design data and number in sequence starting at pump to end of system. Check the sum of branch-circuit flows against approved pump flow rate. Correct variations that exceed plus or minus 5 percent.

B. Prepare plumbing systems for testing and balancing according to the following, in addition to the general preparation procedures specified above:
1. Open all manual and balancing valves for maximum flow.
2. Check pump-motor load. If motor is overloaded, throttle main flow-balancing device so motor nameplate rating is not exceeded.

3.8 PROCEDURES FOR PLUMBING SYSTEMS

A. Measure water flow at pumps. Use the following procedures, except for positive-displacement pumps:
1. Verify impeller size by operating the pump with the discharge valve closed. Read pressure differential across the pump. Convert pressure to head and correct for differences in gage heights. Note the point on manufacturer's pump curve at zero flow and verify that the pump has the intended impeller size.
2. Check system resistance. With all valves open, read pressure differential across the pump and mark pump manufacturer's head-capacity curve. Adjust pump discharge valve until indicated water flow is achieved.
3. Verify pump-motor brake horsepower. Calculate the intended brake horsepower for the system based on pump manufacturer's performance data. Compare calculated brake horsepower with nameplate data on the pump motor. Report conditions where actual amperage exceeds motor nameplate amperage.
4. Report flow rates that are not within plus or minus 5 percent of design.

B. Measure flow at all manual balancing valves and adjust, where necessary, to obtain first balance.

C. Measure flow at main balancing station and set main balancing device to achieve flow that is 5 percent greater than indicated flow.

D. Adjust manual balancing stations to within specified tolerances of indicated flow rate as follows:
1. Determine the balancing station with the highest percentage over indicated flow.
2. Adjust each station in turn, beginning with the station with the highest percentage over indicated flow and proceeding to the station with the lowest percentage over indicated flow.
3. Record settings and mark balancing devices.

E. Measure pump flow rate and make final measurements of pump amperage, voltage, rpm, pump heads, and systems' pressures and temperatures including outdoor-air temperature.

3.9 PROCEDURES FOR MOTORS

A. Motors, 1/2 HP and Larger: Test at final balanced conditions and record the following data:
1. Manufacturer, model, and serial numbers.
2. Motor horsepower rating.

3. Motor rpm.
4. Efficiency rating.
5. Nameplate and measured voltage, each phase.
6. Nameplate and measured amperage, each phase.
7. Starter thermal-protection-element rating.

B. Motors Driven by Variable-Frequency Controllers: Test for proper operation at speeds varying from minimum to maximum. Test the manual bypass for the controller to prove proper operation. Record observations, including controller manufacturer, model and serial numbers, and nameplate data.

3.10 PROCEDURES FOR CONDENSING UNITS

A. Verify proper rotation of fans.
B. Measure entering- and leaving-air temperatures.
C. =Record compressor data.

3.11 PROCEDURES FOR HEAT-TRANSFER COILS

A. Electric-Heating Coils: Measure the following data for each coil:
1. Nameplate data.
2. Airflow.
3. Entering- and leaving-air temperature at full load.
4. Voltage and amperage input of each phase at full load and at each incremental stage.
5. Calculated kilowatt at full load.
6. Fuse or circuit-breaker rating for overload protection.

B. Refrigerant Coils: Measure the following data for each coil:
1. Dry-bulb temperature of entering and leaving air.
2. Wet-bulb temperature of entering and leaving air.
3. Airflow.
4. Air pressure drop.
5. Refrigerant suction pressure and temperature.

3.12 TEMPERATURE-CONTROL VERIFICATION

A. Verify that controllers are calibrated and commissioned.
B. Check transmitter and controller locations and note conditions that would adversely affect control functions.
C. Record controller settings and note variances between set points and actual measurements.
D. Check the operation of limiting controllers (i.e., high- and low-temperature controllers).
E. Check free travel and proper operation of control devices such as damper and valve operators.
F. Check the sequence of operation of control devices. Note air pressures and device positions and correlate with airflow and water flow measurements. Note the speed of response to input changes.
G. Check the interaction of electrically operated switch transducers.
H. Check the interaction of interlock and lockout systems.
I. Check main control supply-air pressure and observe compressor and dryer operations.
J. Record voltages of power supply and controller output. Determine whether the system operates on a grounded or nongrounded power supply.
K. Note operation of electric actuators using spring return for proper fail-safe operations.

3.13 TOLERANCES

A. Set HVAC & Plumbing system airflow and water flow rates within the following tolerances:
   1. Supply, Return, and Exhaust Fans and Equipment with Fans: Plus 5 to plus 10 percent.
   2. Air Outlets and Inlets: 0 to minus 10 percent.
   3. Plumbing-Water Flow Rate: 0 to minus 10 percent.

3.14 REPORTING

A. Initial Construction-Phase Report: Based on examination of the Contract Documents as specified in "Examination" Article, prepare a report on the adequacy of design for systems' balancing devices. Recommend changes and additions to systems' balancing devices to facilitate proper performance measuring and balancing. Recommend changes and additions to HVAC systems and general construction to allow access for performance measuring and balancing devices.

3.15 FINAL REPORT

A. General: Typewritten, or computer printout in letter-quality font, on standard bond paper, in three-ring binder, tabulated and divided into sections by tested and balanced systems.

B. Include a certification sheet in front of binder signed and sealed by the certified testing and balancing engineer.
   1. Include a list of instruments used for procedures, along with proof of calibration.

C. Final Report Contents: In addition to certified field report data, include the following:
   1. Pump curves.
   2. Fan curves.
   3. Manufacturers' test data.
   4. Field test reports prepared by system and equipment installers.
   5. Other information relative to equipment performance, but do not include Shop Drawings and Product Data.

D. General Report Data: In addition to form titles and entries, include the following data in the final report, as applicable:
   1. Title page.
   2. Name and address of TAB firm.
   3. Project name.
   4. Project location.
   5. Architect's name and address.
   6. Engineer's name and address.
   7. Contractor's name and address.
   8. Report date.
   9. Signature of TAB firm who certifies the report.
   10. Table of Contents with the total number of pages defined for each section of the report. Number each page in the report.
   11. Summary of contents including the following:
      a. Indicated versus final performance.
      b. Notable characteristics of systems.
      c. Description of system operation sequence if it varies from the Contract Documents.
   12. Nomenclature sheets for each item of equipment.
   13. Data for terminal units, including manufacturer, type size, and fittings.
   14. Notes to explain why certain final data in the body of reports varies from indicated values.

15. Test conditions for fans and pump performance forms including the following:
    a. Settings for outside-, return-, and exhaust-air dampers.
    b. Conditions of filters.
    c. Cooling coil, wet- and dry-bulb conditions.
    d. Face and bypass damper settings at coils.
    e. Fan drive settings including settings and percentage of maximum pitch diameter.
    f. Inlet vane settings for variable-air-volume systems.
    g. Settings for supply-air, static-pressure controller.
    h. Other system operating conditions that affect performance.

E. System Diagrams:
F. Air-Handling Unit Test Reports:
G. Apparatus-Coil Test Reports:
H. Fan Test Reports:
I. Round, Flat-Oval, and Rectangular Duct Traverse Reports:
J. Air-Terminal-Device Reports:
K. Compressor and Condenser Reports:

L. Pump Test Reports:
M. Instrument Calibration Reports:

END OF SECTION 229500

CJD Engineering LLC 2225 W. Chesterfield Blvd., Suite. 200 Springfield, MO 65807 (417) 877-1700 Fax: (417) 324-7735

SECTION 230100 – GENERAL HVAC REQUIREMENTS

PART 1 - GENERAL

1.1 RELATED DOCUMENTS

A. Drawings and general provisions of the Contract, including General and Supplementary Conditions and Division 1 Specification Sections shall apply to this Section.

1.2 SPECIFICATION FORM AND DEFINITIONS:

A. These Specifications are abbreviated form and contain incomplete sentences. Omissions of words or phrases such as "the Contractor shall", "shall be", "as noted on the Drawings", "according to the drawings", "a", "an", "the", and "all" are intentional. Omitted words and phrases shall be supplied by inference.

B. When a word such as "proper", "satisfactory", "equivalent", and "as directed" is used, it requires Engineer's review.

C. "Provide" means furnish and install.

D. "Working Day" wherever used in these specifications shall mean the normal working days, Monday through Friday, exclusive of Saturday, Sunday and federally observed holidays.

E. Architect - Engineer hereinafter abbreviated A/E shall mean both the Design Architects and the Design Engineers.

F. Design Engineer hereinafter abbreviated D/E shall mean the engineering firm, CJD Engineering LLC, 2225 West Chesterfield Boulevard, Suite 200, Springfield, Missouri 65807, Telephone (417) 877-1700. Contact person: Allen Davis, adavis@cjd-eng.com

G. Electrical Contractor hereinafter abbreviated E/C shall mean the person or company and their subcontractors who enter into contract with the Owner to perform the electrical division work.

H. Mechanical Contractor hereinafter abbreviated M/C shall mean the person or company and their subcontractors who enter into contract with the Owner to perform the mechanical division work.

I. General Contractor hereinafter abbreviated G/C shall mean the person or company and their subcontractors who enter into contract with the Owner to perform the general division work.

J. Equipment and/or materials manufacturer hereinafter abbreviated E/M shall mean the manufacturer of equipment or materials specified or referred to.

1.3 GENERAL EXTENT OF WORK:

A. Provide HVAC systems indicated on drawings, specified or reasonably implied. Provide every device and accessory necessary for proper operation and completion of mechanical systems. In no case will claims for "Extra Work" be allowed for work about which M/C could have informed himself before bids were taken.

B. M/C shall familiarize himself with equipment provided by other Contractors, which require mechanical connections and controls.

1.4 LOCAL CONDITIONS:

A. Visit site and determine existing local conditions affecting work in contract.

B. Failure to determine site conditions or nature of existing or new construction will not be considered a basis for granting additional compensation.

1.5 CODES, ORDINANCES, RULES AND REGULATIONS:

A. Provide work in accordance with applicable codes, rules, ordinances, and regulations of Local, State and Federal Governments and other authorities having lawful jurisdiction.

B. Conform to latest editions and supplements of following codes, standards or recommended practices as adopted by the authority having jurisdiction.

1. CITY CODES:
   a. 2018 International Building Code.
   b. 2018 International Plumbing Code.
   c. 2018 International Fuel Gas Code.
   d. 2018 International Mechanical Code.
   e. 2018 International Fire Protection Code.
   f. 2018 International Energy Conservation Code

2. SAFETY CODES:

   a. National Electric Safety Code Handbook H30- National Bureau of Standards.
   b. Occupational Safety and Health Standards - Department of Labor.
   c. Specifications for Making Buildings and Facilities Accessible To, and Usable By, the Physically Handicapped - American National Standards Institute ANSI Al 17.1

3. NATIONAL FIRE CODES:

   a. NFPA No. 54 Gas Appliance and Gas Piping Code.
   b. NFPA No. 70 National Electric Code - 2005 Edition.
   c. NFPA No. 89M Clearances, Heat Producing Appliances.
   d. NFPA No. 90A Air Conditioning and Ventilation Systems.
   e. NFPA No. 91 Blower and Exhaust Systems.
   f. NFPA No. 101 Life Safety Code - 1999 Edition.

C. Where following standards are applicable to equipment specified, equipment shall conform to requirements of standard and shall display the appropriate seal or seals:

1. AGA - The American Gas Association Laboratories.
2. ASME - American Society of Mechanical Engineers.
3. NSF National Sanitation Foundation.
4. UL Underwriters Laboratories Inc.

D. Drawings and specifications indicate minimum construction standards, but should any work indicated be sub-standard to any ordinances, laws, codes, rules or regulations bearing on work, Contractor shall execute work in accordance with such ordinances, laws, codes rules or regulations without increased cost to Owner, but not until he has referred such variances to A/E for approval.

E. M/C shall secure and pay for necessary permits and certificates of inspection required by governmental ordinances, laws, rules or regulations. Keep a written record of all permits and inspection certificates and submits two copies to A/E with request for final inspection.

1.6 CONTRACT CHANGE:

A. Changes or deviations from contract; including those for extra or additional work must be submitted in writing for review of A/E. No verbal orders will be recognized.

B. Changes in the work shall be submitted in accordance with AIA Document A201. General Conditions of the Contract for Construction.

C. All change proposals shall be itemized indicating separately the costs for materials, labor, restocking changes, freight, bonds, insurance, overhead and profit. All materials shall be listed separately with quantities and individual unit prices. Labor factors shall be from a nationally recognized source with appropriate adjustment factors.

1.7 LOCATIONS AND INTERFERENCES:

A. Locations of equipment, piping and other mechanical work is indicated diagrammatically by mechanical drawings. Determine exact locations on job, subject to structural conditions, work of other Contractors, access requirements for installation and maintenance and to approval of A/E.

B. Study and become familiar with contract drawings of other trades and in particular the general construction plans and details to obtain necessary information for figuring installation. Cooperate with other workmen and install work to avoid interference with their work. Minor deviations, not affecting design characteristics, performance or space limitations may be permitted if reviewed by A/E prior to installation.

C. Any pipe, apparatus, appliance or other item interfering with proper placement of other work as indicated on drawings, specified, or required, shall be removed and if so shown, relocated and reconnected without extra cost. Damage to other work caused by this Contractor, his subcontractor, or his workmen shall be restored as specified for new work.

D. Do not scale mechanical and electrical drawings for dimensions. Accurately lay out work from dimensions indicated on architectural drawings unless such be found in error.

1.8 SYSTEM PERFORMANCE:

A. Final acceptance of work shall be subject to the condition that all systems, equipment, apparatus and appliances operate satisfactorily as designed and intended, work shall include required adjustment of systems and control equipment installed under this specification.

1.9 WARRANTY:

A. M/C warrants to Owner and Architect the quality of materials, equipment, workmanship and operation of equipment provided under this specification division for a period of one year from and after date of substantial completion of building and acceptance of mechanical systems by Owner.

B. Where manufacturers' warranties expire during the one year warranty period, M/C shall include provisions for extending warranty for the full one year period and shall include cost for warranty extension in his base bid. Where warranty extentions are not available from manufacturer, supplier or installer, M/C shall provide labor, parts and material warranty services equal to the requirements of these specifications and the terms of the manufacturer, supplier and installer warranties.

C. M/C warrants to Owner and Architect that on receipt of written notice from either of them within one year warranty period following date of acceptance all defects that have appeared in materials and /or workmanship, shall be promptly corrected to condition required by contract documents at M/C's expense.

D. The above warranty shall not supersede any separately stated warranty or other requirements required by law or by these specifications.

1.10 MATERIALS, EQUIPMENT AND SUBSTITUTIONS:

A. The intent of these specifications is to allow ample opportunity for M/C to use his ingenuity and abilities to perform the work to his and the Owner's best advantage, and to permit maximum competition in bidding on standards of materials and equipment required.

B. Material and equipment installed under this contract shall be first class quality, new, unused and without damage.

C. In general these specifications identify required materials and equipment by naming first the manufacturer whose product was used as the basis for the project design and specifications. The manufacturers product, series, model, catalog and/or identification numbers shall set quality and capacity requirements for comparing the equivalency of other manufacturer's products. Where other manufacturer's names are listed they are considered an approved manufacturer for the product specified, however, the listing of their names implies no prior approval of any product they may propose to furnish as equivalent to the first named product unless specific model or catalog numbers are listed in these specifications or in subsequent addenda. Where other than first named products are used for M/C's base bid proposal it shall be his responsibility to determine prior to bid time that his proposed materials and equipment selections are products of approved manufacturers, that will meet or exceed the specifications and are acceptable to the D/E.

D. Where materials or equipment are described but not named, provide required items of first quality, adequate in every respect for intended use. Such items shall be submitted to A/E for review prior to procurement.

E. Prior to receipt of bids, if M/C wishes to incorporate products other than those named in Specifications in his bid, he shall submit a written request for review of substitutions to D/E not less than **five working days** prior to bid date. D/E will review requests and acceptable items will be listed in an addendum issued to principal bidders.

F. Materials and equipment proposed for substitutions shall be equal to or superior to that specified in construction, efficiency, utility, aesthetic design, and color as determined by A/E whose decision shall be final and without further recourse. Physical size of substitute brand shall be no larger than space

provided including allowances for access for installation and maintenance. Requests must be accompanied by two copies of complete descriptive and technical data including E/M's name, model, and catalog number, photographs or cuts, physical dimensions, operating characteristics and any other information needed for comparison.

G. In proposing a substitution prior to or subsequent to receipt of bids, include in such proposal cost of altering other elements of Project, including adjustments in mechanical-electrical service requirements necessary to accommodate such substitution; whether such affected elements be under this contract or under separate contracts.

H. Within seven working days after bids are received, apparent low bidder shall submit to A/E for approval three copies of a list of all major items of equipment he intends to provide. As soon as practicable and within 30 working days after award of Contract, M/C shall submit shop drawings for equipment and materials to be incorporated in work, for A/E review. Where 30 day limit is insufficient for preparation of detailed shop drawings on major equipment or assemblies, M/C shall submit manufacturer's descriptive catalog data and indicate date such detailed shop drawings will be submitted along with manufacturer's certification that order was placed within 30 working day limit.

I. After execution of contract, substitution of product brands for those named in Specifications will be considered, only if; 1) request is received within thirty days after Contract date and request includes statement showing credit due Owner, if any, if substitution products are used, or 2) Owner requests consideration be given to substitute brands.

1.11 SHOP DRAWINGS, OPERATION AND MAINTENANCE INSTRUCTION:

A. M/C shall furnish digital shop drawings to A/E for review. All shop drawings submitted to engineer for review shall comply with the requirements below and the bid documents. Any shop drawings requiring more that two reviews to comply will be subject to a $500 review charge by engineer.

B. Where catalog cuts are submitted for review, conspicuously mark or provide schedule of equipment, capacities, controls, fittings, sizes, etc. that are to be provided. Mark each submitted item with applicable section and paragraph numbers of these specifications, OR PLAN SHEET NUMBER when item does not appear in specifications. Where equipment submitted does not appear in base specifications of specified equivalent, mark submittals with applicable alternate numbers, change order numbers, change order number or letters of authorization. Each submittal shall contain at least two sets of original catalog cuts. Each catalog sheet shall bear E/M's name and address. All shop drawings on materials and equipment listed by UL shall indicate UL approval on submittal.

C. M/C shall check all shop drawings to verify that they meet specifications and/or drawing requirements before forwarding submittals to the A/E for their review. All shop drawings submitted to A/E shall bear M/C approval stamp which shall indicate that M/C has reviewed submittals and that they meet specification and/or drawing requirements. M/C's submittal review shall specifically check for but not be limited to the following: equipment capacities, physical size in relation to space allowed; electrical characteristics, provisions for supply, return and drainage connections to building systems. All shop drawings not meeting M/C's approval shall be returned to his supplier for resubmittal.

D. No shop drawings submittals will be considered for review by the A/E without M/C's approval stamp, or that have extensive changes made on the original submittal as a result of Contractor's review. All comments or minor notations on shop drawings shall be flagged as follows to indicate originator of comment or notation: 1 Contractor, 2 Construction Manager, 3 Architect, 4 Engineer.

E. A/E will not be responsible for the cost of returning shop drawing submittals that are submitted to them without M/C's review and approval stamp. A letter will be sent to M/C by either the Architect or Engineer indicating receipt of an improper submittal. M/C shall acknowledge receipt of letter and indicate his plans for pick-up or resubmitting. A/E will hold improper submittals for pick-up by M/C or supplier for 15 working days after date of receipt. If not picked up by the 16th working day, submittals will be disposed of by A/E.

F. A/E's review of shop drawings will not relieve M/C of responsibility for deviations from drawings and specifications unless such deviations have been specifically approved in writing by Owner of his representative, nor shall it relieve M/C of responsibility for errors in shop drawings. No work shall be fabricated until A/E's review has been obtained. Any time delay caused by correcting and resubmitting shop drawings will be M/C's responsibility.

G. Operating and Maintenance Instructions:

1. Submit with shop drawings of equipment three copies of installation, operating, maintenance instructions, and parts lists for equipment provided. Instructions shall be prepared by E/M.

2. Keep in safe place, keys and wrenches furnished with equipment under this contract. Present to Owner and obtain a receipt for same upon completion of project.

3. Prepare a complete brochure, covering systems and equipment provided and installed under this contract. Submit brochures to A/E for review before delivery to Owner. Contractor at his option may prepare this brochure or retain an individual to prepare it for him. Include cost of this service in bid. Brochures shall contain following:

4. Certified equipment drawings and/or catalog data with equipment provided clearly marked as outlined under this specification.

5. Complete installation, operating, maintenance instructions and parts lists for each item of equipment.

6. Special emergency operating instructions with a list of service organizations (including addresses and telephone numbers) capable of rendering emergency service to various parts of mechanical systems.

H. Provide brochures bound in Wilson-Jones No. 133-367-49 or National No. 132-87-784 black vinyl three-ring binders with metal hinge. Reinforce binding edge of each sheet of looseleaf type brochure to prevent tearing from continued usage. Clearly print on label insert of each brochure:

1. Project name and address.

2. Section of work covered by brochure, i.e., "Heating Ventilating and Air Conditioning", and "Plumbing" etc.

1.12 RECORD DOCUMENTS:

A. Record Drawings: Maintain a reproducible set of contract drawings and shop drawings in clean, undamaged condition, with mark-up of actual installations which vary substantially from the work as originally shown. Mark whichever drawing is most capable of showing "field" condition fully and accurately; however, where shop drawings are used for mark-up, record a cross-reference at

corresponding location on working drawings. Mark with red erasable red pencil and, where feasible, use other colors to distinguish between variations in separate categories of work. Markup new information which is recognized to be of importance to Owner, but was for some reason not shown on either contract drawings of shop drawings. Give particular attention to concealed work, which would be difficult to measure and record at a later date. Note related change-order numbers where applicable. Organize record drawing sheers into manageable sets, bind with durable paper cover sheets, and prints suitable titles, dates and other identification on cover of each sheet.

B. Record Specifications: Maintain one copy of specifications, including addenda, change orders, and similar modifications issued in printed form during construction, and mark-up variations (of substance) in actual work in comparison with text of specifications and modifications as issued. Give particular attention to substitutions, selection of option, and similar information on work where it is concealed or cannot otherwise by readily discerned at a later date by direct observation. Note related record drawing information and product data, where applicable. upon completion of mark-up submit to Architect/Engineer for Owner's records.

C. The contractor shall provide a full set of photographs showing the entire underground equipment. The photographs shall be taken prior to any concrete being poured. The underground equipment shall consist of, but not be limited to, the following:

1. Piping
2. Conduits
3. Ductwork

D. The contractor shall provide the photographs in an 8.5” x 11” format for record keeping purposes with the maintenance manuals. The photos shall all be digital and a disk or C.D. shall be provided to the Owner as a permanent record.

1.13 ELECTRICAL REQUIREMENTS:

A. Consult Section 16B of electrical specifications for work to be provided by E/C in conjunction with installation of mechanical equipment.

B. Electrical work required to install and control mechanical equipment which is not shown on plans or specified under Section 16B shall be included in M/C's base bid proposal,

C. The cost of larger wiring, conduit, control and protective devices resulting from installation of equipment which was not used for basis of design as outlined in Article 15A-10g of specifications shall be paid by M/C at no cost to Owner or A/E.

D. M/C shall be responsible for providing supervision to E/C to insure that required connections, interlocking and interconnection of mechanical and electrical equipment are made to attain intended control sequences and system operation.

E. Furnish six complete sets of electrical wiring diagrams to A/E and three complete sets to E/C. Diagrams shall show factory and field wiring of components and controls. Control devices and field wiring to be provided by E/C shall be clearly indicated by notation and drawing symbols on wiring diagrams.

F. M/C shall obtain complete electrical data on mechanical shop drawings and shall list this data on an approval form which shall be presented monthly, or on request, to E/C. Data shall be complete with wiring diagrams received to date and shall contain necessary data on electrical components of

mechanical equipment such as HP, voltage, amperes, watts, locked rotor current to allow E/C to order electrical equipment required in his contract.

G. Safety disconnect switches and manual and magnetic motor starters shall be provided by E/C. Exceptions will be allowed where mechanical equipment is provided with these devices installed as part of factory built control systems.

PART 2 - PRODUCTS (NOT APPLICABLE)

PART 3 - EXECUTION (NOT APPLICABLE)

PART 4 - EXHIBITS

4.1 EXHIBIT A

A. SUBSTITUTION REQUEST FORM following the end of this section.

END OF SECTION 230100

EXHIBIT A - SUBSTITUTION REQUEST FORM

Return completed substitution request form with supporting data five (5) working days prior to bid date. Engineer reserves the right to refuse conderation of requested substitutions submitted less than five (5) working days prior to bid date. Substitution request will not be considered without supporting data.

Specification Section: _____ Page: _____ Paragraph _____

Drawing Detail No. / Sheet No. _____ Description: _____

Specified Manufacturer / Model No.: _____

Substitute Manufactuer / Model No.: _____

Attach supporting data including:

- A product description, specifications, drawings, photographs, samples, capacities at design conditions, reports, and test data adequate for evaluation of the request.
- A description of changes to the Contract Documents that the proposed substitituion will require for its proper installation.
- Location of substitution manufacturer's nearest factory certified service office.

The Undersigned certifies:

- Proposed substitution has been fully investigated and determined to be equal or superior in all respects to specified product.
- Same warranty will be furnished for proposed substitution as for specified product.
- Same maintenance service and source of replacement parts, as applicable, is available.
- Proposed substitution will have no adverse effect on mechanical, plumbing, fire sprinkler, electrical, or other trades and will not affect or delay progress schedule.
- Proposed substitution does not affect dimensions and functional clearances.
- Payment will be made for changes to building design, including A/E design, detailing, and construction costs caused by the substitution, errors in attached supporting data, or insufficient supporting data for thorough review.

Substituion request submitted by: _____

Signed by: _____

Firm: _____

Address: _____

Telephone: _____ Fax: _____

Engineer's Review:

__ Substitution accepted
__ Substitution accepted as noted
__ Substituion rejected
__ Subsititution request received too late

Remarks: _____

Acceptance of requested substitution does not relieve the proposed substitution from submittal/shop drawing review and does not constitute prior approval of proposed substitutued materials or equipment.

Signed by: _____ Date: _____

SECTION 230500 – BASIC MECHANICAL MATERIALS AND METHODS

PART 1 - GENERAL

1.1 RELATED DOCUMENTS

A. Drawings and general provisions of the Contract, including General and Supplementary Conditions, Division 01 Specification Sections and section 230100 - General Mechanical Requirements shall apply to this Section.

PART 2 - PRODUCTS (NOT USED)

PART 3 - EXECUTION

3.1 CUTTING AND PATCHING:

A. M/C shall do cutting and patching of building materials required for installation of work herein specified. Cut no structural members without Architect's approval and in a manner approved by him.

B. Patching shall be by mechanics of particular trade involved and shall meet approval of Architect.

C. Drilling and cutting of openings through building materials requires Architect's review and approval. Make openings in concrete with concrete hole saw or concrete drill. Do not use star drill or air hammer for this work.

3.2 PIPE SLEEVES:

A. Provide proper type and size pipe sleeves and install in walls or floors and where otherwise noted. Sleeves are not required for supply and waste piping through wall supporting plumbing fixtures or for cast iron soil pipe passing through concrete slab on grade except where penetrating a membrane waterproof floor.

B. Each sleeve shall be continuous through wall, floor or roof and shall be cut flush on each side except where indicated otherwise. Sleeves shall not be installed in structural member except where indicated or approved. Sleeves shall be required through floors subject to flooding such as toilet rooms, equipment rooms and kitchens. The contractor shall have the option of:

C. Providing a cast iron sleeve with integral flanges extending 1 inch above finished floor. Sleeve shall be cast in concrete when floor is poured. Annular space between sleeve and pipe shall be filled with Kaowool.

or

D. Provide core-drilled opening in concrete with Thunderline Link-Seal or Calpico Sealing Linx between piping and opening.

E. Sleeves passing through floors with waterproof membranes shall be core-drilled and sealed with Thunderline Link-Seal or Calpico Sealing Linx.

F. Sleeves passing through walls with waterproof membranes shall be sealed with Thunderline Link-Seal or Calpico Sealing Linx.

CJD Engineering LLC 2225 W. Chesterfield Blvd., Suite. 200 Springfield, MO 65807 (417) 877-1700 Fax: (417) 324-7735

G. Pipe insulation shall run continuous thru pipe sleeves with 1/4" minimum clearance between insulation and pipe sleeve. Provide metal jackets over insulated pipes passing thru fire walls, floors and smoke partitions. Jacket shall be 0.018 stainless steel extending 12 inches on either side of barrier and secured to insulation with 3/8" wide band. Provide Kaowool fire master bulk packing between sleeve and metal jacket. Packing thickness shall be sized per manufacturers recommendation for maintaining the integrity, of the fire wall/floor or smoke partition. Fire protection system shall be rated per ASTM E 119. Equivalents to Kaowool are 3M, Flame Stop or Flame Safe.

H. Where piping passes through walls serving as air plenums or chases, seal annular space between pipe and sleeve air tight with Kaowool Firemaster Bulk Packing.

3.3 OPENINGS:

A. This Contractor shall include the installation of all boxes and sleeves for openings required to install this work, excepting only structural openings incorporated in the structural drawings. Sleeves shall be installed for all pipes passing through structural slabs and walls. He shall set and verify the location of sleeves as shown on structural plans that pass through beams, only if so shown.

B. Penetrations in walls for sheet metal ducts shall be sealed by the M/C by stuffing glass fiber into the cracks between the walls, and floors and the ducts. The exposed joints shall then be caulked on each side with non-hardening caulking such as "Tremco Acoustical Sealant". This work applies to all walls in buildings.

3.4 MUTILATION:

A. Mutilation of building finishes, caused by installation of mechanical equipment, fixtures, piping and other mechanical devices shall be repaired at M/C's expense to approval of Architect.

3.5 EXCAVATION AND BACKFILL:

A. Perform necessary excavating to receive work. Provide necessary sheathing, shoring, cribbing, tarpaulins, etc. as required and remove same at completion of work. Perform excavation in accordance with appropriate section of these specifications, and in compliance with OSHA Safety Standards.

B. Excavate trenches of sufficient width to allow ample working space, and no deeper than necessary for installation work.

C. Conduct excavations so no walls or footings are disturbed or injured. Backfill excavations made under or adjacent to footings with selected earth or sand and tamp to compaction required by A/E. Mechanically tamp backfill under concrete and pavings in 6 inch layers to 95% standard density.

D. Backfill trenches and excavations to required heights with allowance made for settlement. Tamp fill material thoroughly and moistened as required for specified compaction density. Dispose of excess earth, rubble and debris as directed by Architect.

E. When available, refer to test hole information on Architectural drawings or specifications for types of soil to be encountered in excavation in base bid.

3.6 WELDING:

A. Contractor shall be responsible for quality of welding and suitability of welding procedures. All welding shall be in accordance with American Welding Society Standard B3.0 and ANSI Standards B31.1.

B. Welding shall be done only by welders who have successfully passed welder qualification tests in previous 12 months for type of welding required. Each welder shall identify his work with a code marking before starting any welded pipe fabrication. Contractor shall submit three copies of a list of welders who will work on project listing welders code, date and types of latest qualifications test passed by each welder.

C. Welded joints shall be fusion-welded in accordance with Level AR3 of American Welding Society Standard AWS D10.9 "Standard for Qualification of Welding Procedures and Welders for Pipe and Tubing". Welders qualified under National Certified Pipe Welding Bureau will be acceptable.

D. Bevel all piping and fittings in accordance with recognized standards by flame cutting or mechanical means. Align and position parts so that branches and fittings are set true. Make changes in direction of piping systems with factory made welding fittings. Make branch connections with welding tees or forged weldolets.

3.7 SETTING, ADJUSTMENT AND EQUIPMENT SUPPORTS:

A. Work shall include mounting, alignment and adjustment of systems and equipment.

B. Set equipment level on adequate foundations and provide proper anchor bolts and isolation as shown, specified or required by E/M's installation instructions.

C. Provide concrete bases for all floor and slab mounted equipment. Refer to drawings for required base type and size. Provide 3 1/2" high base where base is not shown on drawings.

3.8 PAINTING OF MATERIALS AND EQUIPMENT:

A. Equipment and materials exposed to interior dry environment shall have a minimum of one primer and one finish coat. Equipment and materials mounted in exterior location shall have a minimum if one primer and two finish coats with total thickness of at least 5 mils. Finish coat colors in finish areas shall be as selected by A/E.

B. After installation, damage to painted surfaces shall be properly prepared and primed with primers equal to factory materials. Finish coating shall be same color and type as factory finish.

C. Where extensive refinishing of factory applied finishes are required equipment shall be completely repainted. A/E will make final determination on extent of refinishing required.

D. Paint all exterior natural gas piping with one primer coat and two finish coats.

3.9 MAINTENANCE OF SYSTEMS:

A. M/C shall be responsible for operation, maintenance and lubrication of equipment installed under his contract.

3.10 FILTERS:

A. Provide temporary MERV 8 throw-away filters in all permanent heating and air conditioning equipment systems and the return ductwork being utilized during construction. Prior to testing and balancing systems remove temporary filter media and install clean unused filters of the type specified. Clean filters shall be installed in equipment for final acceptance inspection by A/E.

B. Final filters shall have per mechanical schedules with a minimum of MERV 8 rating equal to Farr AP.

3.11 ACCESS PANELS:

A. Milcor, Wade or Zurn access panels shall be provided wherever necessary to provide access to valves, traps, etc., located in concealed spaces. Each fire damper, automatic splitter damper, etc., shall have an access panel. Size shall be adequate for inspection and removal of equipment and none shall be less than 12" x 6".

B. Duct Access Doors: Doors shall be equivalent to CESCO Model 14AD-5. Frame shall not be less than 22 gauge galvanized steel, with 24 gauge door panels. Doors shall have minimum 1” thick insulation, PVC foam tape gaskets, zinc plated steel continuous type hinge and latches. Equivalent by Nailor.

C. Mechanical Wall Access Doors: Doors shall be equivalent to CESCO Model FW-SS, all purpose access panel. Frame shall be 16 gauge stainless steel #304, with 14 gauge stainless steel #304 frame. The hinge shall be continuous stainless steel – concealed. The latch shall be flush mounted screwdriver operated cam latch. The finish shall be #304 stainless steel with a #4 satin finish.

D. Fire Rated Wall/Ceiling Access Door: Doors shall be equivalent to CESCO model FB. Frame shall be 16 gauge galvanized bonderized steel and 20 gauge galvanized bonderized steel. Hinges shall be continuous, galvanized steel with stainless steel pin and a key-operated latch. Provide automatic type door closure. Door shall have a UL rating to match rating of wall/ceiling rating.

3.12 CLEANING AND FLUSHING HEATING HOT WATER SYSTEMS:

A. The heating hot water system for project shall be thoroughly cleaned before placing in operation to rid system of dirt, piping compound, mill scale, oil and any other foreign material.

B. After system is complete, the Contractor shall fill piping loop and all runouts with clear water. For this purpose supply and return runouts shall be temporarily connected together at each air handling and fan coil unit location. There shall be no water flow through air handling and fan coil unit. Loop water shall be circulated for one hour with make up water open and drain open to accomplish initial flushing of system.

C. After initial flushing, individual air handling and fan coil, etc. units shall be connected permanently to supply and return runouts and system filled for operation under normal closed loop conditions. Contractor shall add trisodium phosphate in an aqueous solution to system at rate of one pound per fifty gallons of water in system. After system is filled with this solution, system water shall be brought up to 95 degrees F temperature and allowed to circulate for two hours. System shall then be drained completely and refilled with fresh water.

D. After system has been completely cleaned as specified herein, it shall be tested by litmus paper or other dependable method and shall be left slightly alkaline side (pH 7.5). If system is found to be still on the acid side, cleaning by use of trisodium phosphate shall be repeated.

E. System Additives - M/C shall not add any "stop- leak" compounds to the system.

F. Provide same cleaning and flushing as outlined above for the heating hot water system.

3.13 CLEANING OF SYSTEM AND EQUIPMENT:

A. After pressure testing of systems and equipment and before operational test thoroughly clean interiors of piping and equipment.

B. Clean equipment as recommended by manufacturers. Where specific instructions are not provided by equipment manufacturer clean equipment systems as follows:

C. Air Handling System: Before starting any air system clean all debris, foreign matter and construction dirt from air system and fan. Provide equipment requiring filters, such as air handling units, fan coil units, blowers, etc., with throwaway filters specified under this specification. After cleaning air system install temporary filters and run continuously for 8 hours at full volume.

3.14 STERILIZATION OF DOMESTIC WATER SYSTEM:

A. After final pressure testing of distribution system thoroughly flush entire system with water until free of dirt and construction debris. Fill system with solution of liquid chlorine or hypochlorite of not less than 50 PPM. Retain treated water in system until test indicate non- spore-forming bacteria have been destroyed or for 24 hours whichever is greater.

B. All points in systems shall have at least 10 PPM of solution at end of retention period. Open and close each valve at least six times in system during sterilization to sterilize valve parts.

C. When time and concentration conditions have been met, drain system and flush with fresh domestic water until residual cleaning solution is less than 1.0 PPM. Open and close each valve in system six times during flushing operation.

D. Test samples taken from several points in system shall indicate absence of pollution for two full days. Repeat sterilization as required. Acceptance of system will not be given until satisfactory bacteriological results are obtained.

3.15 START-UP, CHANGE-OVER, TRAINING AND OPERATIONAL CHECK:

A. M/C shall perform initial start-up of systems and equipment and shall provide necessary supervision and labor to make first seasonal changeover of systems. Personnel qualified to start-up and service this equipment, including E/M's technicians when specified, and Owner's operating personnel shall be present during these operations.

3.16 PRE-FINAL AND FINAL CONSTRUCTION REVIEW:

A. At M/C's request, A/E will make pre-final construction review to determine if to the best of their knowledge project is completed in accordance with plans and specifications. Items found by A/E as not complete or not in accordance with requirements of contract will be outlined in report to M/C. After completion and/or correction of these items M/C shall notify Architect he is ready for final review.

B. All necessary system adjustments including air and water systems balancing shall be completed and all specified records and reports submitted in sufficient time to be received by A/E at least ten working days prior to date of final construction review.

C. At final construction review, M/C and his major subcontractors shall be present or shall be represented by a person of authority. Each Contractor shall demonstrate, as directed by A/E, that his work complies with purpose and intent of plans and specifications. Respective Contractor shall provide labor, services, instruments or tools necessary for such demonstrations and tests.

END OF SECTION 230500

CJD Engineering LLC 2225 W. Chesterfield Blvd., Suite. 200 Springfield, MO 65807 (417) 877-1700 Fax: (417) 324-7735

SECTION 230600 – HANGERS AND SUPPORTS

PART 1 - GENERAL

1.1 RELATED DOCUMENTS

A. Drawings and general provisions of the Contract, including General and Supplementary Conditions, Division 01 Specification Sections, section 220100 - General HVAC Requirements, section 230500 – Basic Mechanical Materials and Methods shall apply to this Section.

B. Provide and be responsible for location of piping hangers, supports and inserts, etc., required for installation of piping under this contract. Design of hangers and supports shall conform to current issue of Manufacturer's Standardization Society Specification (MSS) SP-58.

PART 2 - PRODUCTS

2.1 PIPE HANGERS AND SUPPORTS:

A. Pipe hangers shall be capable of supporting piping in all conditions of operation. They shall allow free expansion and contraction of piping, and prevent excessive stress resulting from transferred weight being induced into pipe or connected equipment. Support horizontal or vertical pipes at locations of least vertical movement.

B. Unless indicated otherwise on drawings support horizontal steel piping as follows:

PIPE SIZE	ROD DIAMETER	MAXIMUM SPACING
Up to 1 ¼”	3/8”	8 ft.
1 ½” to 2”	3/8”	10 ft.
2 ½” to 3 ½”	½”	12 ft.
4” to 5”	5/8”	15 ft.
6”	¾”	17 ft.
8” to 12”	7/8”	22 ft.

C. Unless indicated otherwise on drawings support horizontal copper tubing as follows:

NOM. TUBING SIZE	ROD DIAMETER	MAXIUM SPACING
Up to 1”	3/8”	6 ft.
1 ¼” and 1 ½”	3/8”	8 ft.
2”	3/8”	9 ft.
2 ½”	½”	9 ft.
3” and 4”	½”	10 ft.

D. Provide continuous threaded hanger rods wherever possible. No chain, wire, or perforated straps shall be used. Hanger rods shall be subjected to tensile loading only, where lateral or axial pipe movement occurs provide suitable linkage to permit swing. Provide pipe support channels with galvanized finish for concealed locations and painted finish for exposed locations. Submit design for multiple pipe supports indicating pipe sizes, service and support details to Architect- Engineer for review prior to fabrication.

E. Provide Anvil pipe hangers for vertical pipe risers as follows:

PIPE MATERIAL	PIPE SIZE	HANGER FIG. NO.
Copper	½” thru 4”	CT-121
Steel	¾” thru 20”	261

CJD Engineering LLC 2225 W. Chesterfield Blvd., Suite. 200 Springfield, MO 65807 (417) 877-1700 Fax: (417) 324-7735

F. Provide Anvil Fig. 194, 195, 199 steel wall brackets for piping suspended or supported from walls. Brackets shall be prime coated carbon steel.

G. Provide Anvil Fig. 167 protection shields for all insulated piping sized so that line compressive load does not exceed one-third of insulation compressive strength. Shield shall be galvanized steel and support lower 180 degrees of pipe insulation. Omit copper plating on hangers mounted outside insulation on copper tubing.

H. Structural Attachments for pipe hangers shall be as follows:

1. Concrete Structure: Provide Grinnel Fig. 285 concrete insert for loads up to 400 lbs. and Grinnell Fig. 281 wedge type concrete insert for loads up to 1200 lbs.

2. Steel Beam Structure: Provide Grinnell Fig. No. 86 malleable iron C-clamp for pipe size 2" and smaller and Grinnell Fig. 229 malleable iron beam clamp for pipe size 2-1/2" and larger.

PIPE MATERIAL	PIPE SIZE	HANGER FIG NO.
Copper	½” thru 4”	CT-65*
Steel	3/8” thru 4”	65
Steel	5” thru 30”	260

I. Provide Anvil Fig. 45 channel trapeze pipe hangers for horizontal multiple pipe runs with pipe clamps or pipe rollers as follows:

PIPE MATERIAL	PIPE SIZE	CLAMP NO.	ROLLER NO.
Copper	3/8” thru 4”	PS1100*	PS1901
Steel	3/8” thru 6”	PS1100	PS1902

*Copper Plated

J. Provide necessary structural steel and attachment accessories for installation of pipe hangers and supports. Where heavy piping loads are to be attached to building structure verify structural loading with A/E prior to installation.

2.2 EQUIPMENT ANCHORS:

A. Anchors shall be proper type and size recommended by manufacturer for equipment to be anchored.

2.3 CONCRETE INSERTS AND ANCHORS:

A. Provide concrete inserts for attaching piping and equipment as follows:

B. In new construction where attachment points can be predetermined provide PHD Fig. 950 continuous concrete insert of Fig. 950N Universal Steel Concrete insert.

C. In existing construction or new construction where attachment points can not be located before setting concrete forms provide McCullock Kwik-Bolt or Phillips red head concrete anchors of proper type for attachments.

PART 3 - EXECUTION

3.1 PIPE HANGERS AND SUPPORTS

CJD Engineering LLC 2225 W. Chesterfield Blvd., Suite. 200 Springfield, MO 65807 (417) 877-1700 Fax: (417) 324-7735

A. Where horizontal piping movements are such that hanger rod angularity from vertical is greater than 4 degrees from cold to hot position of pipe, offset hanger, pipe, and structural attachments so that rod is vertical in hot position. Hangers shall not become disengaged by movements of supported pipe.

B. Provide sufficient hangers to adequately support piping system at specified spacing at changes in piping direction and at concentrated loads. Hangers shall provide for vertical adjustments to maintain pitch required for proper drainage and for longitudinal travel due to expansion and contraction of piping. Fasten hangers to building structural members wherever practicable.

C. Hangers in direct contact with copper pipe or tubing shall be copper plated.

D. Support horizontal cast iron soil pipe with one hanger for each joint located close to hub.

E. Support plastic piping as recommended by piping manufacturer.

F. Support vertical cast iron soil pipe and PVC pipe at every floor and steel and copper tubing at every other floor except where indicated otherwise on drawings.

G. Mount hangers for insulated piping on outside of pipe, hangers sized to allow for full thickness of pipe insulation.

END OF SECTION 230600

CJD Engineering LLC 2225 W. Chesterfield Blvd., Suite. 200 Springfield, MO 65807 (417) 877-1700 Fax: (417) 324-7735

SECTION 230800 – PIPING INSULATION

PART 1 - GENERAL

1.1 RELATED DOCUMENTS

A. Drawings and general provisions of the Contract, including General and Supplementary Conditions, Division 01 Specification Sections, section 230100 - General HVAC Requirements, section 230500 – Basic Mechanical Materials and Methods shall apply to this Section.

PART 2 - PRODUCTS

2.1 PIPING INSULATION:

A. Provide necessary materials and accessories for installation of insulation for plumbing and mechanical systems as specified and/or detailed on drawings insulation type, jacket, and thickness for specific piping systems or equipment shall be as listed in insulation schedule.

B. Provide insulation materials manufactured by Certain Teed, Knauf, Dow Chemical, Johns Manville or Owen/Corning Fiberglas.

C. Insulation, except where specified otherwise, shall have composite fire and smoke hazard ratings as tested by ASTM E-84, NFPA 255, and UL 723 procedures not exceeding:

FLAME SPREAD	25	
SMOKE DEVELOPED		50
FUEL CONTRIBUTED		50

D. Provided insulation accessories such as adhesives, mastics, cements, tape and glass fabric with same component ratings as listed above. Products or their shipping cartons shall bear label indicating their flame and smoke ratings. Treatment of jackets or facings for impart flame and smoke safety shall be permanent. Use of water soluble treatments such as corn paste or wheat paste is prohibited. This does not exclude approved lagging adhesives.

E. Where glass is specified in the following insulation methods provide resin impregnated with open weave glass fabric with 10/20 thread count.

F. Abbreviations for manufacturers of adhesives, mastics and coating specified shall be C.M. for Chicago Mastic Company and B.F. for Benjamin Foster Company.

G. Pipe insulation materials and application methods by type shall be as follows:

1. Elastomeric: Insulation for cold surface piping system with -40 degrees F to +220 degrees F operating temperature range shall be Armstrong AP Armaflex Elastomeric Pipe insulation average thermal conductivity shall not exceed 0.27 BTU/Hr. at 75 degrees F mean temperature. To greatest extent possible apply insulation without longitudinal joint by slipping insulation over piping. Seal all seams and butt joints with Armstrong 520 adhesive. Insulate fittings as follows:

   a. Insulate fittings with Miter-Cut pieces of AP Armaflex pipe insulation equal to thickness of adjoining pipe insulation. Insulate fittings too large to cover with pipe insulation with insulation from fabricated Armaflex sheet insulation using Armstrong templates. Join and seal all fittings joints with Armstrong 520 adhesive. Finish insulation as soon as possible

CJD Engineering LLC 2225 W. Chesterfield Blvd., Suite. 200 Springfield, MO 65807 (417) 877-1700 Fax: (417) 324-7735

with two coats of Armstrong Armaflex vinyl- lacquer finish in color selected by Architect. All insulation used outdoors shall be painted to prevent ultra violet deterioration of insulation.

2. Fiberglass: Insulation for hot and cold surface piping systems with -60 degrees F to +850 degrees F operating range shall be Owens-Corning Fiberglas 25 pipe insulation with white fire retardant ASJ jacket. Average 75 degrees F mean temperature. Seal longitudinal jacket laps and butt strips with C.M. No. 17-465 or B.F. No. 85-75 vapor barrier adhesive. Insulate valves and fittings as follows:

   a. Insulate exposed and concealed valves and fittings with PVC premolded fitting covers. Provide “Zeston” Series 300 fitting covers as manufactured by Johns Manville.

H. Insulation materials and application methods for piping hangers supports, anchors, guides, expansion joints, etc., shall be as follows:

1. Insulate hangers and supports from direct contact with cold surfaces with Styrofoam HD- 300 plastic foam inserts of half or full sections of premolded pipe insulation equal in thickness to adjoining insulation. Provide inserts with vapor barrier jacket for lapping 2" over adjacent pipe insulation jacket. Protect insulation with insulation shields supporting lower 180 degrees of pipe insulation sized so that pipe compressive load does not exceed one third of insulation insert compressive strength. Seal joints with vapor barrier sealer specified for insulation type used.

2. Insulate pipe anchors in direct contact with cold piping for a distance of 12" or as detailed on drawings from contact point with piping. Anchor insulation shall be one half the thickness of adjoining pipe insulation with vapor barrier. Seal and finish joints with vapor barrier sealer specified for insulation type used.

3. Insulate pipe guides from direct contact with cold surfaces piping with Styrofoam HD-300 plastic foam full section inserts of premolded pipe insulation equal in thickness to adjoining pipe insulation. Provide inserts with vapor barrier jacket for overlapping 2" over adjoining pipe insulation. Insert jacket shall be equal in performance and appearance to adjacent insulation jacket. Seal and finish joints with vapor barrier sealer specified for insulation type used.

4. Insulate pipe expansion joints on cold surface piping with over-sized section of premolded pipe insulation equal in thickness to adjoining pipe insulation. Cover shall float free one end with expansion and contraction of piping system. Seal free end with 4 mil thick PVC vinyl sheet attached to adjoining insulation. Provide sufficient slack in vinyl material to allow for maximum pipe movement.

5. Where piping hanger can not be isolated from cold pipe surfaces insulate piping at hanger locations with extra thickness of pipe insulation. Insulate hanger rod to point 12" above pipe with minimum insulation thickness equal to one-half thickness of pipe insulation. Seal and finish joints with vapor barrier sealer specified for insulation type used.

6. Insulate floor supports in direct contact with cold surface piping with Armstrong 1/2" thick Armstrong FR/Armaflex pipe or sheet insulation as required by surface. Insulate supports from pipe to floor plate and seal insulation joints with Armstrong No. 520. Finish insulation with Armstrong Armaflex vinyl-lacquer finish.

I. SEE PLANS FOR PIPING INSULATION SCHEDULE

CJD Engineering LLC 2225 W. Chesterfield Blvd., Suite. 200 Springfield, MO 65807 (417) 877-1700 Fax: (417) 324-7735

PART 3 - EXECUTION

3.1 Install insulation over clean dry surfaces with joints firmly butted together. Insulation at equipment, flanges, fittings, etc., shall have straight edges with box type joints with corner beads as required. Where plumbing and heating insulation terminates at equipment or unions, taper insulation at 30 degrees angle to pipe with one coat finishing cement and finish same as fittings. Total insulation system shall have neat smooth appearance with no wrinkles, or folds in jackets, joint strips or fitting covers. Seal butt joints at maximum intervals of 45 feet to prevent vapor barrier failures from being transmitted to adjoining insulation sections.

3.2 Undamaged insulation systems on cold surface piping and equipment shall perform their intended functions as vapor barriers and thermal insulation without premature deterioration or vapor barrier. Contractor shall take every reasonable precaution to provide insulation systems with continuous unbroken vapor barriers.

3.3 All pipe insulation shall be continuous through walls, ceiling or floor openings, or sleeves; except where firestop or firesafing materials are required.

3.4 Insulation of removable heads and valves, manholes access covers, HVAC and plumbing pumps, etc., shall be fabricated to allow removal without damage to insulation. Provide removable units with vapor-proof cover fabricated to be sealed to equipment vapor barrier.

3.5 Insulation failing to meet workmanship and appearance standards shall be replaced with an acceptable installation before final acceptance of project will be given. Insulation failing to meet performance requirements of this specification for a period of one year after date of final acceptance or through one heating season and one cooling season, whichever is longer shall be replaced with an acceptable installation. All costs to correct insulation deficiencies and costs to repair damages to other work shall be at M/C's expense at not cost to Owner.

END OF SECTION 230800

CJD Engineering LLC 2225 W. Chesterfield Blvd., Suite. 200 Springfield, MO 65807 (417) 877-1700 Fax: (417) 324-7735

230850 – DUCTWORK INSULATION

PART 1 - GENERAL

1.1 RELATED DOCUMENTS

A. Drawings and general provisions of the Contract, including General and Supplementary Conditions, Division 1 Specification Sections, section 230100 - General HVAC Requirements, section 230500 – Basic Mechanical Materials and Methods shall apply to this Section.

PART 2 - PRODUCTS

2.1 DUCTWORK INSULATION:

A. Provide necessary materials and accessories for installation of interior and exterior ductwork insulation as specified and/or details on drawings. Insulation type and thickness for specific ductwork systems shall be as listed in Ductwork Insulation Schedule.

B. Provide insulation materials manufactured by Armacell Co., CertainTeed, Johns Manville or Knauf.

C. Insulation and application adhesives, except where specified otherwise, shall have fire and smoke hazard rating as tested by ASTM E-84 procedure not exceeding:

FLAME SPREAD	25	
SMOKE DEVELOPED		50
FUEL CONTRIBUTED		50

D. Abbreviations for manufacturers of adhesives, insulating cements and coating specified shall be C.M. for Chicago Mastic Company, B.F. for Benjamin Foster Company and 3M for 3M Company. Average thermal conductivity is expressed in BTU/Hr./Sq.Ft./degrees F/In.

E. Install interior duct liner insulation cut to insure tight fitting corner, and longitudinal joints. Apply liner to sheet metal with 100% coverage of C.M. No. 17-477, B.F. No. 81-18 or 3M manufacturers recommended applications rate. Coat all edges of liner with adhesive. Provide mechanical fasteners on surfaces 18" or wider in addition to liner adhesive with fastener clips set flush with duct liner surface. Provide fasteners as follows:

F. Low Velocity Ductwork (Velocities less than 2000 FPM): Provide fasteners within 3" of leading edge of each section 12" O.C. around joint perimeter and 3" from longitudinal joints 12" O.C. Elsewhere space fasteners 18" O.C. except not more than 6" from longitudinal joints or 12" from corner break.

G. Provide concealed rectangular or round ductwork with exterior thermal insulation of type and thickness listed in schedule. Apply insulation to duct with C.M. No. 17477 or B.F. No. 85-20 adhesive. Provide mechanical fasteners 18" O.C. on duct width 30" and greater. Butt insulation joints tightly together and lap facing 2" over adjacent insulation and seal with vapor barrier adhesive. Seal all breaks with vapor barrier adhesive and vapor barrier tape matching insulation facing.

H. Provide exposed rectangular ductwork with exterior thermal insulation of type and thickness listed in insulation schedule. Apply with mechanical fasteners spaced 12" O.C. with minimum of two rows per duct side. Seal fasteners, joints, breaks, and punctures with vapor barrier adhesive reinforced with 3" wide vapor barrier tape matching insulation facing.

CJD Engineering LLC 2225 W. Chesterfield Blvd., Suite. 200 Springfield, MO 65807 (417) 877-1700 Fax: (417) 324-7735

I. Provide exposed round sheet metal ductwork with exterior thermal insulation of type and thickness listed in insulation schedule. Apply insulation with joints tightly butted together with vapor barrier adhesive. Insulate fittings with insulation thickness equal to adjoining insulation with cover overlapping 2" onto adjacent covering.

J. Ductwork scheduled for internal lining is NOT sized on the drawings to include the lining. Size shown on the drawings is the inside duct measurement.

K. **SEE PLANS FOR DUCTWORK INSULATION SCHEDULE**

PART 3 - EXECUTION

3.1 Apply insulation to duct with C.M. No. 17477 or B.F. No. 85-20 adhesive. Provide mechanical fasteners 18" O.C. on duct width 30" and greater. Butt insulation joints tightly together and lap facing 2" over adjacent insulation and seal with vapor barrier adhesive. Seal all breaks with vapor barrier adhesive and vapor barrier tape matching insulation facing.

END OF SECTION 230850

CJD Engineering LLC 2225 W. Chesterfield Blvd., Suite. 200 Springfield, MO 65807 (417) 877-1700 Fax: (417) 324-7735

SECTION 231400 – PIPING SYSTEMS

PART 1 - GENERAL

1.1 RELATED DOCUMENTS

A. Drawings and general provisions of the Contract, including General and Supplementary Conditions, Division 01 Specification Sections, section 230100 - General HVAC Requirements, section 230500 – Basic Mechanical Materials and Methods shall apply to this Section.

PART 2 - PRODUCTS

2.1 PIPING IDENTIFICATION:

A. Lettering on marker shall be at least 1-inch high block type in contrasting color. An arrow indicating flow direction shall be painted next to each marker. Where markers occur on parallel groups of piping they shall be neatly lined up.

B. See Piping Identification Schedule.

PIPING IDENTIFICATION SCHEDULE

Service	Letter Wording	Marker Color	Letter Color
Domestic Cold Water	Domestic Cold Water	Green	White
Domestic Hot Water	Domestic Hot Water	Yellow	Black
Domestic Hot Water Return	Hot Water Return	Yellow	Black
Fire Sprinkler Water	Fire Sprinkler Water	Red	White

2.2 PIPING MATERIALS AND FITTINGS:

A. Piping used throughout project shall conform to the following specifications. Piping shall be plainly marked with manufacturers name and weight. All materials listed may not be required on this project. See piping material schedules in Section 22 of this specification for materials to be used for each piping system. Piping materials shall be as follows:

1. Hubless Cast Iron Soil Pipe:

a. Pipe and fittings shall be gray cast iron with spigot bead and positioning lug. Pipe and fittings shall be coated inside and out with asphaltum preservative and shall meet requirements of current Cast Iron Soil Pipe Institute Standard 301-69T.

b. Pipe joints shall be no-hub joint couplings consisting of neoprene rubber sleeve, stainless steel shield and clamp assembly.

c. Pipe and fittings by Tyler Pipe, Charlotte or Central Foundry.

2. Carbon Steel Pipe (1/8" through 2-1/2"):

a. Provide continuous weld or electric resistance welded carbon steel pipe conforming to ASTM Specification A-120 or A-53 as scheduled.

b. Pipe joints shall be threaded conforming to ANSI Standard B2.1.

CJD Engineering LLC 2225 W. Chesterfield Blvd., Suite. 200 Springfield, MO 65807 (417) 877-1700 Fax: (417) 324-7735

c. Pipe by Armco, Youngstown, United States Steel or equal.

3. Polyvinyl Chloride (PVC) Pipe:

a. Provide Type 1, Grade 1, Polyvinyl Chloride Pipe conforming to requirements of current ASTM Specification D-1785 for pressure piping as scheduled. Pipe shall be approved by National Sanitation Foundation (NSF) for potable water.

b. Provide Type 1, Grade 1, Polyvinyl Chloride Pipe conforming to requirements of current ASTM Specification D-2665 for DWV piping as scheduled. Cellular core PVC piping will not be approved.

c. Pipe for pressure piping shall have plain ends for socket type fittings.

d. Pipe by Chemtrol, Charlotte, Tyler or equal.

4. Copper Tube:

a. Provide hard temper copper water tube conforming to requirements of current ASTM Specification B-88. Tubing shall be Type K, L or M as listed in schedule.

b. Tubing joints shall be soldered or brazed, See schedule for joining method to be used.

c. Pipe by Cerro, Chase, Mueller, Revere Copper or equal.

2.3 PIPING FITTINGS:

A. Piping fittings used throughout project shall be proper type for installation method used and shall be compatible with piping system materials. Fittings listed in piping material schedule shall conform to the following specifications:

1. Carbon Steel Welding Fittings:

a. Provide Carbon Low Alloy Seamless Steel Welding Fittings conforming to current ANSI Standard B16.9 and ASTM Specification A234.

b. Fittings by Anvil, Midwest or equal.

2. Branch Connection Welding Fittings:

a. Provide carbon steel Weldolet fittings conforming to ANSI Standards B16.9, B16.11, B31.1.0 and ASTM Specification Al 05 grade 11.

b. Fittings by Bonney Forge or equal.

3. Branch Connection, Welding to Screwed Fitting:

a. Provide carbon steel Threadolet fitting conforming to ANSI Standards B16.9, B16.1 1, B31.1 and ASTM Specification A105 Grade 11.

b. Fittings by Bonney Forge or equal.

CJD Engineering LLC 2225 W. Chesterfield Blvd., Suite. 200 Springfield, MO 65807 (417) 877-1700 Fax: (417) 324-7735

4. Carbon Steel Flanges:

   a. Provide carbon steel flanges conforming to ASTM Specification A181 Grade 1 and ANSI Standard B16.5.

   b. Flanges by Anvil, Midwest or equal.

5. Malleable Iron Screwed Fittings:

   a. Provide screwed malleable iron fittings conforming to ANSI Standard B16.3, B2.1 and ASTM Specification A-47 grade 32510.

   b. Fittings by Crane, Anvil, Stockham or equal.

6. Cast Iron Screwed Fittings:

   a. Provide screwed cast iron fittings conforming to ANSI Standard B16.4, B2.1, and ASTM Specification A-126, Class A.

   b. Fittings by Crane, Anvil, Stockham or equal.

7. Wrought Copper Fittings:

   a. Provide wrought solder joint copper tube fitting conforming to ANSI Standard B16.22.

   b. Fittings by Chase, Nibco or equal.

8. Cast Bronze Fittings:

   a. Provide cast bronze solder joint fittings conforming to ANSI Standard B16.18.

   b. Fittings by Chase, Nibco or equal.

9. PVC, DWV Fittings:

   a. Provide PVC, DWV socket fittings conforming to ASTM D-3311 and D-2661.

   b. Solvent cement of socket fittings shall conform to ASTM D-2235.

   c. Fittings by Chemtrol, Charlotte, Tyler or equal.

2.4 INSULATING UNIONS AND FLANGES:

A. Provide insulating unions and flanges conforming to following specifications and plainly and permanently marked with manufacturer's name and pressure class rating. Unions and flanges shall be as follows:

1. Iron or steel pipe to copper pipe:

   a. Provide Epco dielectric union or flange with screwed or solder joint as required. Union shall have 250 PSI rating and flange 175 PSI rating at 190 degrees F.

2.5 STRAINERS:

CJD Engineering LLC 2225 W. Chesterfield Blvd., Suite. 200 Springfield, MO 65807 (417) 877-1700 Fax: (417) 324-7735

A. General: Provide Zurn "Y" type self-cleaning strainers with FIPT blow-off outlet, flanges or screwed end with pressure rating as required by piping system. Provide strainers with removable stainless steel or monel screens with perforations as follows:

TYPE OF SERVICE	STRAINERS SIZE, INCHES ¼ to 2	2 ½ to 6	8 to 24
Water	.005	1/16	1/8

B. Equivalent strainers by Armstrong, Metraflex, Trane, Nibco, Victaulic or Spirax Sarco.

2.6 UNIONS:

A. Provide Stockham brass seat unions of material and pressure rating required by piping system.

B. Equivalent union by Metraflex, Grinnell or equal.

PART 3 - EXECUTION

3.1 PIPING IDENTIFICATION:

A. Identify piping in mechanical rooms, open pipe chases, tunnels, and other places where piping is accessible for operation and maintenance by painting with identification colors and with pressure sensitive pipe markers.

B. Place piping markers so they can be easily read from operating position and floor.

C. Mark piping with marker and a 3-inch wide bank of identification color around circumference of pipe in lieu of painting complete pipe or pipe covering.

3.2 STRAINERS:

A. Install strainers upstream from automatic control valves, steam traps and pumps. Where strainers are an integral part of these items or incorporated in accessory equipment directly upstream, individual line strainers will not be required. Strainers shall be same size as piping. Provide strainers with proper isolation and blow down valves to allow basket removal for cleaning.

3.3 UNIONS:

A. Provide unions or flanged joint in each line preceding connections to equipment or valves requiring maintenance.

B. Where piping systems of dissimilar materials are jointed together provide proper insulating union as specified under this specification.

3.4 PIPING INSTALLATION:

A. Pipe sizes indicated on plans and as specified refer to nominal size in inches for steel pipe, cast iron pipe and copper tubing, unless otherwise indicated. Pipes are sized to nearest 1/2". In no case shall piping smaller than size specified be used.

CJD Engineering LLC 2225 W. Chesterfield Blvd., Suite. 200 Springfield, MO 65807 (417) 877-1700 Fax: (417) 324-7735

B. Contractor shall provide and be responsible for proper location of pipe sleeves, hangers, supports and inserts. Install hangers, supports, inserts, etc., as recommended by manufacturer and as specified and detailed on drawings. Verify construction types and provide proper hangers, inserts and supports in accordance with manufacturers load ratings and provide for thermal expansion of piping without exceeding allowable stress on piping or supports. Provide solid type hangers and supports where pipe travel exceeds manufacturers recommendations for fixed hanger and supports. Provide copper plated hangers and supports for suspension of uninsulated copper tubing lines.

C. Install all piping parallel with building lines and parallel with other piping to obtain a neat and orderly appearance of piping system. All piping shall be concealed unless noted otherwise. Secure piping with approved anchors and provide guides where required to insure proper direction of piping expansion. Piping shall be installed so that allowable stress for piping, valves and fittings used are not exceeded during normal operation or testing of piping system.

D. Provided piping materials and wall thickness for specific piping systems as listed in piping schedules on drawings. Steel piping systems 2-1/2" under shall be threaded pipe and fittings. Steel pipe systems 3" and above shall be weld end pipe and fittings unless required otherwise by Code.

E. Provide unions or flanged joints in each pipe line preceding connections to equipment to allow removal for repair or replacement. Provide all screwed end valves with union adjacent to valve unless valve can be otherwise easily removed from line. Provide unions on identical sizes of equipment for which one replacement item to be installed between unions without making any piping changes.

F. Piping fitting materials for specific piping systems shall be as listed in piping schedule. Fittings shall be approved factory made type with threaded or weld ends as required. Fitting pressures and temperature ratings shall be equal to or exceed maximum operating temperature and working pressure of piping system. No mitered or field fabricated pipe fittings will be permitted.

G. All pipe threads shall meet ANSI Standard B2.1 for taper threads. Lubricate pipe threads with Astroseal teflon thread sealant and lubricating compound applied full strength. Powdered or made up compound will not be permitted. Pipe thread compound shall be applied only to male pipe threads.

H. Welded pipe joints shall be made by qualified welding procedures and welders. Welding electrodes shall be type and material recommended by electrode manufacturer for materials to be welded. All pipe fitting ends shall be beveled a minimum of 30 degrees prior to welding.

I. Brazed socket type joints shall be made with suitable brazing alloys. Minimum socket depth shall be sufficient for intended service. Brazing alloy shall be end fed into socket and shall fill completely annular clearance between socket and pipe or tube. Brazed joints depending solely upon a fillet rather than a socket type joint will not be acceptable.

J. Soft soldered socket type joints shall be made in with 95-5 tin-antimony solder as required by temperature and pressure rating of piping system. Soldered socket joints shall be limited to systems containing nonflammable and non-toxic fluids. Soldered socket-type joints shall not be used on piping systems subject to shock or vibration. Soldered joints depending solely upon a fillet rather than a socket-type joint will not be acceptable.

K. Make changes in piping size and direction with approved factory made fittings. Steel pipe and fittings 2-1/2" and smaller shall be threaded type, pipe and fittings 3" and larger shall be weld type. Provide fittings suitable for at least 125 PSI working pressure or of pressure rating required for maximum working pressure of system whichever is greater.

3.5 TESTING PROCEDURES:

CJD Engineering LLC 2225 W. Chesterfield Blvd., Suite. 200 Springfield, MO 65807 (417) 877-1700 Fax: (417) 324-7735

A. Test all lines and systems before they are insulated, painted or concealed by construction or backfilling. Provide fuel, water, electricity, materials, labor and equipment required for tests.

B. Where entire system can not be tested before concealment, test system in sections. Upon completion, each system shall be tested as an entire system.

C. Repair or replace defects, leaks and materials failures revealed by tests and then retested until satisfactory. Make repairs with new materials.

D. Verify that system components are rated for maximum test pressures to be applied. Where specified test pressures exceed component ratings remove or isolate components from system during tests.

E. Test methods and pressures shall be as follows:

1. Hydrostatic Test (Closed Systems):

   a. Hydrostatic test shall be performed using clean unused domestic water. Test pressures shall be as scheduled for system or 150% of operating pressure where not specified.

2. Hydrostatic Test (Open System):

   a. Test entire system with 10 foot head of water. Where system is tested in sections each joint in building except uppermost 10 feet of system shall be submitted to at least 10 feet head of water. Water shall be held in system for 15 minutes before inspection starts. System shall hold test pressure without leaks.

3. Pneumatic Test:

   a. Test entire system with compressed air. Systems operating above 2 PSI shall be tested at 75 PSI or 150% of operating pressure or whichever is greater.

   b. Allow at least 1 hour after test pressure has been applied before making initial test.

   c. During test, completely isolate entire system from compressor or other sources of air pressure,

4. Pressure Relief and Safety Valve:

   a. Before installation, test pressure temperature, and safety relief valves to confirm relief settings comply with specifications.

   b. Tag items that pass test with date of test, observed relief pressure setting and inspector's signature.

   c. Items installed in systems without test tag attached will be rejected.

F. All systems shall hold scheduled test pressures for specified time without loss of initial test pressure.

G. Upon completion of testing submit five copies of a typewritten report to A/E. Report shall list systems tested, test methods, test pressures, holding time and all failures with corrective action taken.

H. For test pressures see Piping Material Schedule on drawings.

CJD Engineering LLC 2225 W. Chesterfield Blvd., Suite. 200 Springfield, MO 65807 (417) 877-1700 Fax: (417) 324-7735

3.6 PIPING PROTECTIVE COATING:

A. Prepare and coat field made pipe joints and make coating repairs according to manufacturer's recommendation. Cover joints with shrinkable polyethylene sleeve. Coated piping passing through pipe sleeve shall have double thickness coating through sleeve.

END OF SECTION 231400

CJD Engineering LLC 2225 W. Chesterfield Blvd., Suite. 200 Springfield, MO 65807 (417) 877-1700 Fax: (417) 324-7735

SECTION 238150 – METAL DUCTWORK

PART 1 - GENERAL

1.1 RELATED DOCUMENTS

A. Drawings and general provisions of the Contract, including General and Supplementary Conditions, Division 01 Specification Sections, section 230100 - General HVAC Requirements, section 230500 – Basic Mechanical Materials and Methods shall apply to this Section.

1.2 SUMMARY

A. This Section includes metal ducts for supply, return, outside, and exhaust air-distribution systems in pressure classes from minus 2- to plus 10-inch wg. Metal ducts include the following:
1. Rectangular ducts and fittings.
2. Single-wall, round spiral-seam ducts and formed fittings.
3. Double-wall, round spiral-seam ducts and formed fittings.
4. Duct liner.

1.3 SYSTEM DESCRIPTION

A. Duct system design, as indicated, has been used to select size and type of air-moving and -distribution equipment and other air system components. Changes to layout or configuration of duct system must be specifically approved in writing by Engineer.

PART 2 - PRODUCTS

2.1 SHEET METAL MATERIALS

A. Provide commercial quality prime, bright spangled galvanized sheet steel, on all ductwork. Sheet metal shall be manufactured in the United States of America.

B. Comply with SMACNA's "HVAC Duct Construction Standards--Metal and Flexible" for acceptable materials, material thicknesses, and duct construction methods, unless otherwise indicated. Sheet metal materials shall be free of pitting, seam marks, roller marks, stains, discolorations, and other imperfections.

C. Galvanized Sheet Steel: Lock-forming quality; complying with ASTM A 653/A 653M and having G90 coating designation; ducts shall have mill-phosphatized finish for surfaces exposed to view.

D. Aluminum Sheets: Comply with ASTM B 209 Alloy 3003, H14 temper; with mill finish for concealed ducts, and standard, one-side bright finish for duct surfaces exposed to view.

2.2 SEALANT MATERIALS

A. Water-Based Joint and Seam Sealant: Flexible, adhesive sealant, resistant to UV light when cured, UL 723 listed, and complying with NFPA requirements for Class 1 ducts.

2.3 HANGERS AND SUPPORTS

CJD Engineering LLC 2225 W. Chesterfield Blvd., Suite. 200 Springfield, MO 65807 (417) 877-1700 Fax: (417) 324-7735

A. Building Attachments: Concrete inserts, powder-actuated fasteners, or structural-steel fasteners appropriate for construction materials to which hangers are being attached.
   1. Use powder-actuated concrete fasteners for standard-weight aggregate concretes or for slabs more than 4 inches thick.
   2. Exception: Do not use powder-actuated concrete fasteners for lightweight-aggregate concretes or for slabs less than 4 inches thick.

B. Hanger Materials: Galvanized sheet steel or threaded steel rod.
   1. Strap and Rod Sizes: Comply with SMACNA's "HVAC Duct Construction Standards--Metal and Flexible" for steel sheet width and thickness and for steel rod diameters.

C. Duct Attachments: Sheet metal screws, blind rivets, or self-tapping metal screws; compatible with duct materials.

D. Trapeze and Riser Supports: Steel shapes complying with ASTM A 36/A 36M.
   1. Supports for Galvanized-Steel Ducts: Galvanized-steel shapes and plates.

2.4 RECTANGULAR DUCT FABRICATION

A. Fabricate ducts, elbows, transitions, offsets, branch connections, and other construction according to SMACNA's "HVAC Duct Construction Standards--Metal and Flexible" and complying with requirements for metal thickness, reinforcing types and intervals, tie-rod applications, and joint types and intervals.
   1. Lengths: Fabricate rectangular ducts in lengths appropriate to reinforcement and rigidity class required for pressure class.
   2. Deflection: Duct systems shall not exceed deflection limits according to SMACNA's "HVAC Duct Construction Standards--Metal and Flexible."

B. Cross Breaking or Cross Beading: Cross break or cross bead duct sides 19 inches and larger and 0.0359 inch thick or less, with more than 10 sq. ft. of nonbraced panel area unless ducts are lined.

C. Provide turning vanes in all elbows over 20 degrees unless otherwise noted.

D. Make ductwork transitions with sides sloped not to exceed a maximum of 20 degrees, 40 degrees included angle for diverging air flow and 30 degrees, 60 degrees included angle for converging air flow. Factory fabricated reducing fittings of ASME short flow nozzle design will be acceptable for round ductwork.

2.5 APPLICATION OF LINER IN RECTANGULAR DUCTS

A. All metal ductwork scheduled for interior thermal and acoustical liner is not sized on plans to include the proper thickness of insulation. Add 1 " or 2" in height and width of ductwork to accommodate insulation thickness. Mount duct specialties such as turning vanes, damper, etc., to ductwork with the section insulated "Build Outs" to maintain continuity of thermal barrier.

B. Adhere a single layer of duct liner with at least 90 percent adhesive coverage at liner contact surface area. Attaining indicated thickness with multiple layers of duct liner is prohibited.

C. Apply adhesive to transverse edges of liner facing upstream that do not receive metal nosing.

D. Butt transverse joints without gaps and coat joint with adhesive.

E. Fold and compress liner in corners of rectangular ducts or cut and fit to ensure butted-edge overlapping.

CJD Engineering LLC 2225 W. Chesterfield Blvd., Suite. 200 Springfield, MO 65807 (417) 877-1700 Fax: (417) 324-7735

F. Secure liner with mechanical fasteners 4 inches from corners and at intervals not exceeding 12 inches transversely; at 3 inches from transverse joints and at intervals not exceeding 18 inches longitudinally.

G. Secure transversely oriented liner edges facing the airstream with metal nosings that have either channel or "Z" profiles or are integrally formed from duct wall. Fabricate edge facings at the following locations:
   1. Fan discharges.
   2. Intervals of lined duct preceding unlined duct.

2.6 ROUND DUCT AND FITTING FABRICATION

A. Round, Longitudinal- and Spiral Lock-Seam Ducts: Fabricate supply ducts of galvanized steel according to SMACNA's "HVAC Duct Construction Standards--Metal and Flexible."

B. Duct Joints:
   1. Ducts up to 20 Inches in Diameter: Interior, center-beaded slip coupling, sealed before and after fastening, attached with sheet metal screws.

C. 90-Degree Tees and Laterals and Conical Tees: Fabricate to comply with SMACNA's "HVAC Duct Construction Standards--Metal and Flexible," with metal thicknesses specified for longitudinal-seam straight ducts.

D. Diverging-Flow Fittings: Fabricate with reduced entrance to branch taps and with no excess material projecting from fitting onto branch tap entrance.

E. Fabricate elbows using die-formed, gored, pleated, or mitered construction. Bend radius of die-formed, gored, and pleated elbows shall be 1-1/2 times duct diameter. Unless elbow construction type is indicated, fabricate elbows as follows:
   1. Mitered-Elbow Radius and Number of Pieces: Welded construction complying with SMACNA's "HVAC Duct Construction Standards--Metal and Flexible," unless otherwise indicated.
   2. Round Elbows 8 Inches and Less in Diameter: Fabricate die-formed elbows for 45- and 90-degree elbows and pleated elbows for 30, 45, 60, and 90 degrees only. Fabricate nonstandard bend-angle configurations or nonstandard diameter elbows with gored construction.
   3. Round Elbows 9 through 14 Inches in Diameter: Fabricate gored or pleated elbows for 30, 45, 60, and 90 degrees unless space restrictions require mitered elbows. Fabricate nonstandard bend-angle configurations or nonstandard diameter elbows with gored construction.
   4. Round Elbows Larger Than 14 Inches in Diameter: Fabricate gored elbows unless space restrictions require mitered elbows.

2.7 DOUBLE-WALL DUCT AND FITTING FABRICATION

A. Manufacturers: Subject to compliance with requirements, provide products by one of the following manufacturers: Lewis & Lambert, Lindab Inc. or McGill Airflow.

B. Ducts: Fabricate double-wall insulated ducts with an outer shell and an inner duct. Dimensions indicated are for inner ducts.
   1. Outer Shell: Base metal thickness on outer-shell dimensions. Fabricate outer-shell lengths 2 inches longer than inner duct and insulation and in metal thickness specified for single-wall duct.

CJD Engineering LLC 2225 W. Chesterfield Blvd., Suite. 200 Springfield, MO 65807 (417) 877-1700 Fax: (417) 324-7735

2. Insulation: 1-inch- thick fibrous glass, unless otherwise indicated. Terminate insulation where double-wall duct connects to single-wall duct or uninsulated components, and reduce outer shell diameter to inner duct diameter.
3. Thermal Conductivity (k-Value): 0.26 at 75 deg F mean temperature.
4. Perforated Inner Ducts: Fabricate with 0.028-inch- thick sheet metal having 3/32-inch- diameter perforations, with overall open area of 23 percent.
5. Maintain concentricity of inner duct to outer shell by mechanical means. Prevent dislocation of insulation by mechanical means.

PART 3 - EXECUTION

3.1 DUCT APPLICATIONS

A. Static-Pressure Classes: Each duct system shall be constructed throughout for the specific pressure classifications shown on the contract documents in equipment or fan schedules listed as external or total static pressure.

3.2 DUCT INSTALLATION

A. Construct and install ducts according to SMACNA's "HVAC Duct Construction Standards--Metal and Flexible," unless otherwise indicated.

B. Construct and install ductwork to be completely free from vibration under all conditions of operation. Support and securely anchor ductwork and equipment from structural framing of building. Provide suitable intermediate metal framing where required between building structural framing.

C. Install round and flat-oval ducts in lengths not less than 12 feet unless interrupted by fittings.

D. Install ducts with fewest possible joints.

E. Install fabricated fittings for changes in directions, size, and shape and for connections.

F. Install couplings tight to duct wall surface with a minimum of projections into duct. Secure couplings with sheet metal screws. Install screws at intervals of 12 inches, with a minimum of 3 screws in each coupling.

G. Install ducts, unless otherwise indicated, vertically and horizontally and parallel and perpendicular to building lines; avoid diagonal runs.

H. Install ducts close to walls, overhead construction, columns, and other structural and permanent enclosure elements of building.

I. Install ducts with a clearance of 1 inch, plus allowance for insulation thickness.

J. Conceal ducts from view in finished spaces. Do not encase horizontal runs in solid partitions unless specifically indicated.

K. Seal all joints and seams. Apply sealant to male end connectors before insertion, and afterward to cover entire joint and sheet metal screws.

L. Electrical Equipment Spaces: Route ducts to avoid passing through transformer vaults and electrical equipment spaces and enclosures.

CJD Engineering LLC 2225 W. Chesterfield Blvd., Suite. 200 Springfield, MO 65807 (417) 877-1700 Fax: (417) 324-7735

M. Non-Fire-Rated Partition Penetrations: Where ducts pass through interior partitions and exterior walls and are exposed to view, conceal spaces between construction openings and ducts or duct insulation with sheet metal flanges of same metal thickness as ducts. Overlap openings on 4 sides by at least 1-1/2 inches.

N. Fire-Rated Partition Penetrations: Where ducts pass through interior partitions and exterior walls, install appropriately rated fire dampers, sleeves, and firestopping sealant. Fire and smoke dampers are specified in Division 22 Section "Duct Accessories." Firestopping materials and installation methods are specified in Division 07 Section "Through-Penetration Firestop Systems."

O. Protect duct interiors from the elements and foreign materials until building is enclosed. Follow SMACNA's "Duct Cleanliness for New Construction."

3.3 SEAM AND JOINT SEALING

A. Seal duct seams and joints according to SMACNA's "HVAC Duct Construction Standards--Metal and Flexible" for duct pressure class indicated.
   1. For pressure classes lower than 2-inch wg (500 Pa), seal transverse joints.

B. Seal ducts before external insulation is applied.

3.4 HANGING AND SUPPORTING

A. Support horizontal ducts within 24 inches of each elbow and within 48 inches of each branch intersection.

B. Support vertical ducts at maximum intervals of 16 feet and at each floor.

C. Install upper attachments to structures with an allowable load not exceeding one-fourth of failure (proof-test) load.

D. Install concrete inserts before placing concrete.

E. Install powder-actuated concrete fasteners after concrete is placed and completely cured.
   1. Do not use powder-actuated concrete fasteners for lightweight-aggregate concretes or for slabs less than 4 inches thick.

3.5 CONNECTIONS

A. Make connections to equipment with flexible connectors according to Division 22 Section "Duct Accessories & HVAC Specialties."

B. Comply with SMACNA's "HVAC Duct Construction Standards--Metal and Flexible" for branch, outlet and inlet, and terminal unit connections.

END OF SECTION 238150

CJD Engineering LLC 2225 W. Chesterfield Blvd., Suite. 200 Springfield, MO 65807 (417) 877-1700 Fax: (417) 324-7735

SECTION 228200 – DUCT ACCESSORIES AND HVAC SPECIALTIES

PART 1 - GENERAL

1.1 RELATED DOCUMENTS

A. Drawings and general provisions of the Contract, including General and Supplementary Conditions, Division 01 Specification Sections, section 230100 - General HVAC Requirements, section 230500 – Basic Mechanical Materials and Methods shall apply to this Section.

PART 2 - PRODUCTS

A. Specialties shall be factory fabricated items designed for low, medium or high velocity systems as indicated on contract documents. Submit shop drawings on all specialties required with shop drawings of ductwork layout. Specialties shall be as follows:

1. Turning Vanes: Turning vanes shall be a true airfoil design; smoothly-rounded entry nose with extended trailing edge. Generated sound power level shall not exceed 54 decibels in band 4 at 2,000 FPM—duct size 24 x 24. Turning vanes shall be H•E•P–High Efficiency Profile—as manufactured by Aero/Dyne Co. or equivalent. Assemblies shall be fabricated with Aero/DyneCo. side rails; vanes installed on design centers across the full diagonal dimension of the elbow.

2. Control Damper: (Round) Provide Ruskin model CDRS25. Equivalent by Carnes, CESCO, Greenheck, Nailor, Prefco, Titus, United McGill and, Louvers & Dampers Co.

3. Volume Dampers: (Round - Velocities 1500 FPM and less) Provide Ruskin model MDRS25. Equivalent by Carnes, CESCO, Greenheck, Nailor, Prefco, Titus, United McGill and, Louvers & Dampers Co.

4. Volume Dampers: (Rectangular - Velocities 1500 FPM and less) Provide Ruskin model MD35. Equivalent by Carnes, CESCO, Greenheck, Nailor, Prefco, Titus, United McGill and, Louvers & Dampers Co.

5. Flexible Connections: Metaledge Ventglas prefabricated flexible connection of 3-1/4 inch wide heat and fire resistant neoprene coated glass fabric with two 3 inch wide 24 gauge metal strips attached to each edge. Duro-Dyne Corp. or equal. Provide stainless steel strips on acid exhaust fans.

6. Flexible Connections: Metaledge Ventglas prefabricated flexible connection of 3-1/4 inch wide heat and fire resistant neoprene coated glass fabric with two 3 inch wide 24 gauge metal strips attached to each edge. Duro-Dyne Corp. or equal. Provide stainless steel strips on acid exhaust fans.

7. Access Doors: Provide access doors in ductwork for access to fire dampers, smoke dampers etc., installed under this contract. Doors and frames shall be furnished in prime coat of gray rust inhibitive paint. Frames shall be seamless one-piece galvanized mild steel. The doors shall be outer and inner panels one-piece galvanized mild steel. The door insulation shall be a minimum of 1 " thick. Gasket shall be positive seal and fastners progressive action cam locks type (zinc plated). Access doors shall be Nailor, Higgins, Milcor, CESCO or equal.

8. Flexible duct shall be Flex master Type 8M flexible duct in accordance with NFPA BOA, NFPA 90B and UL compliance, Class I Air Duct. Duct shall be factory insulated with flexible fiberglass insulation with a minimum R-value of 5.0 at a mean temperature of 75 F. The insulation shall be covered with a reinforced aluminum pigmented vapor barrier jacket having a permeance of not greater than 0.05 perms when tested in accordance with ASTM E96, procedure A. Flexible duct shall be rated for a velocity of at least

CJD Engineering LLC 2225 W. Chesterfield Blvd., Suite. 200 Springfield, MO 65807 (417) 877-1700 Fax: (417) 324-7735

4000 feet per minute and suitable for operating temperatures of at least 250 F. Internal working pressure rating shall be at least 6 inches W.C. positive and 4 inches W.C. negative. Equivalent flexible duct by ATCO, Wiremold or approved equal. Maximum flexible duct length of run shall be 5'-0" unless shown otherwise. Contractor shall submit acoustic performance factors for flexible duct. Performance factors shall be equivalent to the flexible duct specified. All flexible duct installed in attics shall be insulated with flexible fiberglass insulation with a minimum R-value of 8.0 at a mean temperature of 75 F.

9. Round take-off fittings from medium, high, and low pressure rectangular ductwork shall be made with Buckley BMD or equal bell mouth fittings. H.E.T. High Efficiency takeoffs, Buckley Model 3300D or equal will be allowed, where space is not available.

10. Fire Dampers: (Wall/Floor) Provide, at locations shown on plans, dynamic rated fire dampers constructed and tested in accordance with UL Safety Standard 555. Each fire damper shall have a 1 1/2 hour fire protection rating, 212 F fusible link, and shall include a UL label in accordance with established UL labeling procedures. Damper Manufacturer's literature submitted for approval prior to installation shall include comprehensive performance data developed from testing in accordance with AMCA Standard 500 and shall illustrate pressure drops for all sizes of dampers required at all anticipated air flow rates. Fire dampers shall be equipped for vertical or horizontal installation as required by the location shown. Fire dampers shall be installed in wall and floor openings utilizing steel sleeves, angles, other materials, and practices required to provide an installation equivalent to that utilized by the manufacturer when dampers were tested at UL. Installation shall be in accordance with the damper manufacturer's instructions.

11. Combination fire/smoke dampers: Combination fire/smoke dampers shall be ruskin model FSD60-2, UL-555 and UL555S classified, 1-1/2 hour rated, leakage class II, combination fire/smoke damper with air-foil shaped blades, 250 deg. f. elevated temperature rating, 16 gauge factory frame, self lubricating bearings in stainless steel sleeve, jamb and blade seals, 212 deg. f. heat actuated quick detect controlled closure temperature release, 120 volt, 60 hz, two-position, fail closed externally mounted actuator, retaining angles, and integral sleeve. Provide accessories for out-of-wall installations as needed.

12. Ceiling Radiation Dampers: Provide at all ceiling penetrations in fire rated ceilings a U.L. Listed Fire Resistance Classified Ceiling Radiation Damper. Fire dampers with 1 1/2 or 3 hour rating for walls or floors are not to be used in fire rated ceiling openings due to the fact they do not provide the necessary heat barrier. Dampers shall have passed U.L. test and be labeled such for use in any fire-resisting floor or roof ceiling assembly with a restrained and or unrestrained assembly rating of 3 hours or less. Dampers shall be supplied with 165 degree fusible links. Units installed in T-Bar ceilings or with openings larger than diffuser/grille neck size (flared out necks above ceiling) shall be complete with U.L. Classified thermal insulating blankets. All installation shall be in accordance with manufacturers published installation instructions and U.L. 555C. Dampers shall be United Air CFD-R (Round), CFD-1 and CFD-2 (Square/Rectangular). Equivalent manufacturers shall be CESCO, Prefco, Louvers & Dampers, Nailor or Greenheck.

13. Counterbalanced Backdraft Dampers: Unless backdraft dampers have been specified with a piece of equipment, provide Ruskin model CBS7 counterbalanced backdraft dampers suitable for use in temperatures to 250 F and pressure differentials of 4" w.g. for 48" damper widths, 6" w.g. for 36" widths, 8" w.g. for 24" widths, and 10" w.g. for 12" widths. Damper frame shall be 8" x 2" x 14 gage steel channel, and blade shall be 16 gage galvanized steel. Axles shall be 1/2" diameter plated steel supported by ball bearings pressed into frame. Counterbalance weights shall be adjustable and mounted outboard of frame. Finish shall be mill galvanized.

CJD Engineering LLC 2225 W. Chesterfield Blvd., Suite. 200 Springfield, MO 65807 (417) 877-1700 Fax: (417) 324-7735

14. Flexible Connections: Metaledge Ventglas prefabricated flexible connection of 3-1/4 inch wide heat and fire resistant neoprene coated glass fabric with two 3 inch wide 24 gauge metal strips attached to each edge. Duro-Dyne Corp. or equal. Provide stainless steel strips on acid exhaust fans.

15. Louvers, for Mechanical Systems: (Wind-Driven Rain Stationary) Provide louvers as indicated in the **LOUVER SCHEDULE** on the construction drawings. Louvers shall pass 800 fpm free area velocity with less than 0.15" water pressure drop. Wind Driven Rain Resistance; Based on testing a 39 inch by 39 inch core area, 41 inch by 44 inch nominal size louver in accordance with AMCA 500-L, 50 mph wind velocity and 8”/hour rainfall rate, 296 FPM core velocity, Water Resistance Effectiveness = 99.3 percent, (AMCA Class). Equivalent by Cesco, Prefco, Pottorff, Greenheck, Louvers & Dampers, and Ruskin.

16. Louvers, for Elevator Hoistway Venting: (Stationary) Provide louvers as indicated in the **LOUVER SCHEDULE** on the construction drawings. Louvers shall pass 1000 fpm free area velocity with less than 0.19" water pressure drop and shall carry less than 0.1 oz/sf of water during a 15 minute period when tested in accordance with AMCA Standard 500 Louvers shall bear the AMCA certified ratings. Equivalent by Cesco, Prefco, Pottorff, Greenheck, Louvers & Dampers, and Ruskin.

PART 3 - EXECUTION

A. SHEET METAL SPECIALTIES

1. Install sheet metal specialties in accordance with the manufacturer’s requirements.

END OF SECTION 238200

SECTION 238235 – SEMI-CUSTOM PACKAGED ROOFTOP UNITS – 15 TO 140 TON

PART 1 - GENERAL

1.1 SECTION INCLUDES

A. Packaged Rooftop air conditioners

1.2 REFERENCES

A. AFBMA 9 - Load Ratings and Fatigue Life for Ball Bearings.

B. AMCA 99—Standards Handbook

C. AMCA 500—Test Methods for Louver, Dampers, and Shutters.

D. AHRI 340/360 - Unitary Large Equipment

E. NEMA MG1—Motors and Generators

F. National Electrical Code.

G. NFPA 70—National Fire Protection Agency.

H. SMACNA—HVAC Duct Construction Standards—Metal and Flexible.

I. UL 900—Test Performance of Air Filter Units.

1.3 SUBMITTALS

A. Shop Drawings: Indicate assembly, unit dimensions, weight loading, required clearances, construction details, field connection details, electrical characteristics and connection requirements.

B. Product Data:

1. Provide literature that indicates dimensions, weights, capacities, ratings, fan performance, and electrical characteristics and connection requirements.
2. Provide computer generated fan curves with specified operating point clearly plotted.
3. Manufacturer's Installation Instructions.

1.4 OPERATION AND MAINTANENCE DATA

A. Maintenance Data: Provide instructions for installation, maintenance and service.

1.5 QUALIFICAITONS

A. Manufacturer: Company specializing in manufacturing the Products specified in this section with minimum five years documented experience, who issues complete catalog data on total product.

B. Startup must be done by trained personnel experienced with rooftop equipment.

C. Do not operate units for any purpose, temporary or permanent, until ductwork is clean, filters and remote controls are in place, bearings lubricated, and manufacturers' installation instructions have been followed.

1.6 DELIVERY, STORAGE, AND HANDLING

A. Deliver, store, protect and handle products to site.

B. Accept products on site and inspect for damage.

CJD Engineering LLC 2225 W. Chesterfield Blvd., Suite. 200 Springfield, MO 65807 (417) 877-1700 Fax: (417) 324-7735

C. Store in clean dry place and protect from weather and construction traffic. Handle carefully to avoid damage to components, enclosures, and finish.

PART 2 - PRODUCTS

2.1 MANUFACTURERS

A. AAON as base bid. Daikin as deduct alternate.

2.2 GENERAL DESCRIPTION

A. Furnish as shown on plans, RoofPak Singlezone Heating and Cooling Unit(s) . Unit performance and electrical characteristics shall be per the job schedule.

B. Configuration: Fabricate as detailed on prints and drawings.

C. The complete unit shall be ETL listed.

D. Each unit shall be specifically designed for outdoor rooftop application and include a weatherproof cabinet. Units shall be of a modular design with factory installed access sections available to provide maximum design flexibility.

E. Unit shall be completely factory assembled and shipped in one piece.

F. Unit to be shipped fully charged with R410A.

The unit shall undergo a complete factory run test prior to shipment. The factory test shall include final balancing of all fan assemblies, a refrigeration circuit runtest, a unit control system operations checkout, a unit refrigerant leak test, and a final unit inspection.

G. Factory test shall include test and adjustment of the gas furnace.

H. All units shall have decals and tags to indicate caution areas and aid unit service. Unit nameplates shall be fixed to the main control panel door. Electrical wiring diagrams shall be attached to the control panels. Installation, operating and maintenance bulletins and start-up forms shall be supplied with each unit.

I. Performance: All scheduled capacities and face areas are the minimum accepted value. All scheduled amps, KW, and HP are maximum accepted values that allow scheduled capacity to be met.

2.3 CABINET, CASING, AND FRAME

A. Unit cabinet shall be designed to operate at total static pressures up to 6.5 inches w.g.

B. Unit shall have heavy gauge solid galvanized steel liners provided throughout, allowing no exposed insulation within the air stream. All cabinet insulation, except floor panels, shall be a nominal 2” thick, 1 ½ lb. density, R6.5, glass fiber. Floor panels shall include 1” thick, 3 lb. density, R4.2, glass fiber insulation.

C. Exterior surfaces shall be constructed of painted galvanized steel, for aesthetics and long-term durability. Paint finish will include a base primer with a high-quality polyester resin topcoat. Finished, unabraded panel surfaces shall be exposed to an ASTM B117 salt spray environment and exhibit no visible red rust at a minimum of 3,000 hours exposure. Finished, abraded surfaces shall be tested per ASTM D1654, having a mean scribe creepage not exceeding 1/16” at 1,000 hours minimum exposure to an ASTM B117 salt spray environment. Measurements of results shall be quantified using ASTM D1654 in conjunction with ASTM D610 and ASTM D714 to evaluate blister and rust ratings.

D. Service doors shall be provided on both sides of each section in order to provide user access to all unit components. Service doors shall be constructed of heavy gauge galvanized steel with galvanized steel interior liners. All service doors shall be mounted on multiple, stainless steel hinges and shall be secured by a stainless steel latch system that is operated by a single handle. The latch system shall feature a staggered engagement for ease of operation and a safety catch shall protect the user from injury in case a positive pressure door is

opened while the fan is operating. Removable panels, or doors secured by multiple, mechanical fasteners are not acceptable.

E. The unit base frame shall be constructed of 13 gauge pre-painted galvanized steel.

F. The unit base shall overhang the roof curb for positive water runoff and shall have a formed recess that seats on the roof curb gasket to provide a positive, weathertight seal. Lifting brackets shall be provided on the unit base with lifting holes to accept cable or chain hooks.

2.4 FANS

A. All fan assemblies shall be statically and dynamically balanced at the factory, including a final trim balance, prior to shipment. All fan assemblies shall employ solid steel fan shafts. Heavy-duty pillow block type, self-aligning, grease lubricated ball bearings shall be used. Bearings shall be sized to provide an L-50 life at 200,000 hours. The entire fan assembly shall be isolated from the fan bulkhead and mounted on spring isolators. pitch V-belt drives with matching belts shall be provided. V-belt drives shall be selected at the manufacturers standard service factor.

B. Fan motors shall be heavy-duty 1800 rpm premium efficiency. Fan motors to have grease lubricated ball bearings. Motors shall be mounted on an adjustable base that provides for proper alignment and belt tension adjustment.

C. Motor shall be Open Drip proof.

D. Airfoil supply fans.

1. Supply fan shall be a double width, double inlet (DWDI) airfoil centrifugal fan. All fans shall be mounted using shafts and hubs with mating keyways. Fans shall be Class II type and fabricated from heavy-gauge aluminum. Fan blades shall be continuously welded to the back plate and end rim.

E. Propeller Exhaust fans.

1. Belt drive propeller exhaust fans shall be provided. Propellers shall be constructed with fabricated steel, and shall be securely attached to fan shafts. All propellers shall be statically and dynamically balanced. Motors shall be permanently lubricated, heavy duty type, carefully matched to the fan load. Ground and polished steel fan shafts shall be mounted in permanently lubricated, sealed ball bearing pillow blocks. Bearings shall be selected for a minimum (L10) life in excess of 100,000 hours at maximum cataloged operating speeds. Drives shall be sized for a minimum of 150 percent of driven horsepower. Pulleys shall be of the fully machined cast iron type, keyed and securely attached to wheel and motor shafts. Motor sheaves shall be adjustable for system balancing. Drive frame and panel assemblies shall be galvanized steel. Drive frames shall be formed channels and panels shall be welded construction. The axial exhaust or supply fans shall bear the AMCA Certified Ratings Seals for both sound and air performance. Return fans are not acceptable.

2. The exhaust fans shall be controlled by a variable frequency drive.

2.5 FILTERS

A. Unit shall be provided with a draw-through filter section. The filter section shall be supplied complete with the filter rack as an integral part of the unit. The draw-through filter section shall be provided with panel filters.

B. 2" thick 30% efficient MERV 8 pleated panel filters shall be provided. Filters shall be frame mounted and shall slide into galvanized steel racks contained within the unit. Filters shall be installed in an angular arrangement to maximize filter area and minimize filter face velocity. Filters shall be accessible from both sides of the filter section.

2.6 HEATING AND COOLING SECTIONS

CJD Engineering LLC 2225 W. Chesterfield Blvd., Suite. 200 Springfield, MO 65807 (417) 877-1700 Fax: (417) 324-7735

A. The cooling coil section shall be installed in a draw through configuration, upstream of the supply air fan. The coil section shall be complete with factory piped cooling coil and sloped drain pan. Hinged access doors on both sides of the section shall provide convenient access to the cooling coil and drain pan for inspection and cleaning.

B. Submittals must demonstrate that scheduled unit leaving air temperature (LAT) is met, that fan and motor heat temperature rise (TR) have been considered, and scheduled entering air temperature (EAT) equals mixed air temperature (MAT). Draw-thru cooling - Scheduled EAT equals cooling coil EAT and scheduled unit LAT equals cooling coil LAT plus TR.

C. Direct expansion (DX) cooling coils shall be fabricated of seamless 1/2" diameter high efficiency copper tubing that is mechanically expanded into high efficiency aluminum plate fins. Coils shall be a multi-row, staggered tube design. All units shall have two independent refrigerant circuits and shall use an interlaced coil circuiting that keeps the full coil face active at all load conditions.

D. All coils shall be factory leak tested with high pressure air under water.

E. A stainless steel, positively sloped drain pan shall be provided with the cooling coil The drain pan shall extend beyond the leaving side of the coil and underneath the cooling coil connections. The drain pan shall have a minimum slope of 1/8" per foot to provide positive draining. The drain pan shall be connected to a threaded drain connection extending through the unit base. Units with stacked cooling coils shall be provided with a secondary drain pan piped to the primary drain pan.

F. A natural gas fired furnace shall be installed in the unit heat section. The heat exchanger shall include a type 321 stainless steel cylindrical primary combustion chamber, a type 321 stainless steel header, 321 stainless steel steel secondary tubes and type 321 stainless steel turbulators. Carbon or aluminized steel heat exchanger surfaces are not acceptable. The heat exchanger shall have a condensate drain. Clean out of the primary heat exchanger and secondary tubes shall be accomplished without removing casing panels or passing soot through the supply air passages. The furnace section shall be positioned downstream of the supply air fan.

G. The furnace shall be supplied with a forced draft burner capable of continuous modulation between 5% and 100% of rated capacity, without steps, and shall operate efficiently at all firing rates. The burner shall have proven open damper low-high-low prepurge cycle, and proven low fire start. The combustion air control damper shall be in the closed position during the off cycle to reduce losses.

H. The burner shall be specifically designed to burn natural gas and shall include a microprocessor based flame safeguard control, combustion air proving switch, pre-purge timer and spark ignition. The gas train shall include redundant gas valves, shutoff cock, pilot gas valve, pilot pressure regulator, and pilot cock.

2.7 HOT GAS REHEAT

A. Unit shall be equipped with a fully modulating hot gas reheat coil with hot gas coming from the unit condenser.

B. Hot gas reheat coil shall be a Micro Channel design. The aluminum tube shall be a micro channel design with high efficiency aluminum fins. Fins shall be brazed to the tubing for a direct bond. The capacity of the reheat coil shall allow for a 20°F temperature rise at all operating conditions.

C. The modulating hot gas reheat systems shall allow for independent control of the cooling coil leaving air temperature and the reheat coil leaving air temperature. The cooling coil and reheat coil leaving air temperature setpoints shall be adjustable through the unit controller. During the dehumidification cycle the unit shall be capable of 100% of the cooling capacity. The hot gas reheat coil shall provide discharge temperature control within +/- 2°F.

D. Each coil shall be factory leak tested with high-pressure air under water.

2.8 VARIABLE AIR VOLUME CONTROL

A. Separate electronic variable frequency drives shall be provided for each fan. Drives shall be independent. Drives shall be cooled by the filtered mixed air stream. The completed unit assembly shall be listed by a recognized safety agency, such as ETL. Drives are to be accessible through a hinged door assembly complete with a single handle latch mechanism. Mounting arrangements that expose drives to high temperature, unfiltered ambient air are not acceptable. The unit manufacturer shall install all power and control wiring.

B. The drive output shall be controlled by the factory installed main unit control system and drive status and operating speed shall be monitored and displayed at the main unit control panel. The supply and return/exhaust fan drive outputs shall be independently controlled in order to provide the control needed to maintain building pressure control. Supply and return/exhaust air fan drives that are slaved off a common control output are not acceptable.

C. All drives shall be factory run tested prior to unit shipment.

2.9 OUTDOOR / RETURN AIR SECTION

A. Unit shall be provided with an outdoor air economizer section. The 0 to 100% outside air economizer section shall include outdoor, return, and exhaust air dampers. Outdoor air shall enter from both sides of the economizer section through horizontal, louvered intake panels complete with rain lip and bird screen. The floor of the outdoor air intakes shall provide for water drainage. The economizer section shall allow return air to enter from the bottom of the unit. The outside and return air dampers shall be sized to handle 100% of the supply air volume. The dampers shall be opposed sets of parallel blades, arranged vertically to converge the return air and outdoor air streams in multiple, circular mixing patterns.

B. UltraSeal low leak dampers shall be provided on outdoor or return dampers. Damper blades shall be fully gasketed and side sealed and arranged horizontally in the hood. Damper leakage shall be less than1.5 CFM/Sq. Ft. of damper area at 1.0 inch static pressure differential. Leakage rate to be tested in accordance with AMCA Standard 500. Damper blades shall be operated from multiple sets of linkages mounted on the leaving face of the dampers.

C. A barometric exhaust damper shall be provided to exhaust air out of the back of the unit. A bird screen shall be provided to prevent infiltration of foreign materials. Exhaust damper blades shall be lined with urethane gasketing on contact edges.

D. Control of the outdoor or return dampers shall be by a factory installed actuator. Damper actuator shall be of the modulating, spring return type. If outdoor air is suitable for “free” cooling, the outdoor air dampers shall modulate in response to the unit’s temperature control system. An adjustable enthalpy control shall be provided to sense the dry-bulb temperature and relative humidity of the outdoor air stream to determine if outdoor air is suitable for “free” cooling.

E. Economizer assembly shall be California Title 24 compliant. MicroTech III controls shall display a warning, and write a warning to the BAS, if the economizer malfunctions in accordance with Title 24 specifications

2.10 DISCHARGE AND RETURN PLENUM OPTIONS

A. A supply air discharge plenum shall be provided. The plenum section shall have a bottom discharge opening.

2.11 CONDENSING SECTION

A. Air Cooled Condenser

1. The condensing section shall be open on the sides and bottom to provide access and to allow airflow through the coils. Condenser coils shall be multi-row and fabricated from cast aluminum micro-channel coils. Each condenser coil shall be factory leak tested with high-pressure air under water. Coils are to be recessed so that the cabinet provides built in hail protection.

2. Condenser fans shall be direct drive, propeller type designed for low tip speed, vertical air discharge, and include service guards. Fan blades shall be constructed of steel and riveted to a steel center hub. Condenser fan motors shall be heavy-duty, inherently protected, three-phase, non-reversing type with permanently lubricated ball bearing and integral rain shield.

B. Scroll Compressors
1. Each unit shall have multiple, heavy-duty Copeland scroll compressors.
2. Each compressor shall be complete with gauge ports, crankcase heater, sight-glass, anti-slug protection, motor overload protection and a 5 minute time anti-cycling time delay.
3. Compressors shall be isolated with resilient rubber isolators to decrease noise transmission.

C. Refrigeration Circuit
1. Each unit shall have two independent refrigeration circuits. Each circuit shall be complete with low pressure control, pumpdown switch, liquid line solenoid valve, filter drier, liquid moisture indicator/sight-glass, thermal expansion valve, liquid line charging valve with a 3/8" charging port, a manual reset high pressure safety switch. The thermal expansion valve shall be capable of modulation from 100% to 25% of its rated capacity. Sight-glasses shall be accessible for viewing without disrupting unit operation. Each circuit shall be dehydrated and factory charged with 410-A Refrigerant and oil.
2. Each compressor shall be complete with gauge, ports, crankcase heater, sight - glass, anti-slug protection, motor overload protection and a 5 minute time anti-cycling time delay.

D. Modulating hot gas reheat shall be factory installed on the lead circuit complete with modulating valves, micro-channel refrigerant reheat coil and dehumidification control. Controls shall maintain +/- 0.5 degree control of the reheat coil leaving air temperature

2.12 ELECTRICAL

A. Unit wiring shall comply with NEC requirements and with all applicable UL standards. All electrical components shall be UL recognized where applicable. All wiring and electrical components provided with the unit shall be number and color-coded and labeled according to the electrical diagram provided for easy identification.

B. The unit shall be provided with a factory wired weatherproof control panel. Unit shall have a single point power terminal block for main power connection. A terminal board shall be provided for low voltage control wiring. Branch short circuit protection, 115-volt control circuit transformer and fuse, system switches, and a high temperature sensor shall also be provided with the unit. Each compressor and condenser fan motor shall be furnished with contactors and inherent thermal overload protection. Supply fan motors shall have contactors and external overload protection. Knockouts shall be provided in the bottom of the main control panels for field wiring entrance.

C. All 115-600 volt internal and external wiring between control boxes and components shall be protected from damage by raceways or liquid tight conduit.

D. Single non-fused disconnect switch shall be provided for connecting electrical power at the unit. Disconnect switches shall be mounted internal to the control panel and operated by an externally mounted handle. Externally mounted handle is designed to prohibit opening of the control panel door without the use of a service tool.

E. Unit SCCR rating to be 10 kAIC.

F. Phase failure and under voltage protection shall be provided to prevent damage from single phasing, phase reversal, and low voltage conditions.

G. Smoke detectors to be ionization type, which responds to invisible products of combustion without requiring the sensing of heat, flame or visible smoke. Upon sensing smoke, the unit shall provide a control output for use

by building management system such that the building management system can issue the required safety commands.

H. Factory mounted smoke detectors shall be installed in the return air opening.

2.13 ROOF CURBS

A. A prefabricated heavy gauge galvanized steel, spring vibration isolation mounting curb shall be provided for field assembly on the roof decking prior to unit shipment. The roof curb shall be a full perimeter type with complete perimeter support of the air handling section. Overhung condensing unit sections shall be supported by a structural steel pedestal assembly with isolation springs that are vertically and laterally restrained and shall be installed as the main curb section.

B. The roof curb upper support rail shall provide continuous structural support for the rooftop unit. The lower support curb shall be a formed channel fabricated of heavy gauge galvanized steel with a continuous wood nailer. The base plate of the curb shall be 1” wide and shall be welded, bolted or screwed to the building support steel. The springs components shall be 2” deflection, freestanding, unhoused, laterally stable steel springs. Supply and return opening duct frames shall be provided as part of the curb structure allowing duct connections to be made directly to the curb prior to unit arrival. Gasket shall be provided for field mounting between the unit base and roof curb. Refer to RTU/AHU schedule for additional curb requirements.

Roof curb shall be Vibro-Accoustics type VCR or as approved by engineer.

2.14 CONTROLS

A. Each unit shall be equipped with a complete microprocessor based control system. The unit control system shall include all required temperature and pressure sensors, input/output boards, main microprocessor and operator interface. All boards shall be individually replaceable for ease of service. All microprocessors, boards, and sensors shall be factory mounted, wired and tested.

B. Return air fan to be controlled via direct building static pressure.

C. The microprocessor shall be a stand-alone DDC controller not dependent on communications with any on-site or remote PC or master control panel. The microprocessor shall maintain existing set points and operate stand alone if the unit loses either direct connect or network communications. The microprocessor memory shall be protected from voltage fluctuations as well as any extended power failures. All factory and user set schedules and control points shall be maintained in nonvolatile memory. No settings shall be lost, even during extended power shutdowns.

D. The main microprocessor shall support an RS-232 direct connection to a product service tool or a modem. A BACnet® MSTP communications module shall be provided for direct communication into the BAS network.

E. All digital inputs and outputs shall be protected against damage from transients or wrong voltages. Each digital input and digital output shall be equipped with an LED for ease of service. All field wiring shall be terminated at a separate, clearly marked terminal strip.

F. The microprocessor memory shall be protected from all voltage fluctuations as well as any extended power failures. The microprocessor shall support an RS-232 direct connect from an IBM PC or 100% true compatible using control software. The microprocessor shall maintain existing set points and operate stand alone if the rooftop loses either direct connect or network communications.

G. The microprocessor shall have a built-in time schedule. The schedule shall be programmable from the unit keypad interface. The schedule shall be maintained in nonvolatile memory to insure that it is not lost during a power failure. There shall be one start/stop per day and a separate holiday schedule. The controller shall

accept up to sixteen holidays each with up to a 5-day duration. Each unit shall also have the ability to accept a time schedule via BAS network communications.

H. If the unit is to be programmed with a night setback or setup function, an optional space sensor shall be provided. Space sensors shall be available to support field selectable features. Sensor options shall include Zone sensor with tenant override switch, or Zone sensor with tenant override switch and heating/cooling set point adjustment.

I. User Interface (UI)
   1. The keypad/display character format shall be 20 characters x 4 lines. The character font shall be a 5 x 8 dot matrix. The display shall be a super twist liquid crystal display (LCD) with black characters on yellow background providing high visibility. The display form shall be in plain English coded formats. Lookup tables are not acceptable.
   2. The keypad shall be equipped with 8 individual touch-sensitive membrane key switches. All control settings shall be password protected from changes by unauthorized personnel.
   3. Both a unit-mounted and remote-mounted UI shall be provided. One remote UI can communicate with up to 8 separate units. Both the unit-mounted and remote-mounted UI are always active. The control contractor is responsible for wiring between the unit and the remote UI. The maximum wiring distance to the remote UI is 2100 feet. The remote UI shall have an 8 line x 30 character display. The remote UI shall be provided with the same “push and roll” navigational tool and have identical functionality to the unit-mounted UI.

J. The display shall provide the following information:
   1. Supply, return, outdoor and space air temperature.
   2. Building static pressure- the control contractor is responsible for providing and installing sensing tubes.
   3. Fan status and airflow verification.
   4. Fan VFD speed.
   5. Outside air damper position and economizer mode.
   6. Cooling, heating and changeover status.
   7. Occupied, unoccupied, and dirty filter status.
   8. Date and time schedules.
   9. Up to 4 current alarms and 8 previous alarms with time and date.

K. The keypad shall provide the following set points as a minimum:
   1. Six control modes including off manual, auto, heat/cool, cool only, heat only and fan only.
   2. Four occupancy modes including auto, occupied, unoccupied and bypass (tenant override with adjustable duration).
   3. Control changeover based on return air temperature, outdoor air temperature, or space temperature.
   4. Primary cooling and heating set point temperature based on supply or space temperature.
   5. Night setback and setup space temp.
   6. Cooling and heating control differential (or dead band).
   7. Cooling and heating supply temperature reset options based on one of the following: Return air temperature, outdoor air temperature, space temperature, Airflow, or external (1-5VDC) signal.
   8. Reset schedule temperature.
   9. High supply, low supply and high return air temperature alarm limits.
   10. Ambient compressor and heat lockout temperatures.
   11. Auto or manual lead lag method on compressors.
   12. Compressor interstage timers duration.
   13. Building static pressure.

CJD Engineering LLC 2225 W. Chesterfield Blvd., Suite. 200 Springfield, MO 65807 (417) 877-1700 Fax: (417) 324-7735

14. Minimum outdoor airflow reset based on external reset (1-5 VDC), percent of CFM capacity, and fixed outdoor damper position.
15. Economizer changeover based on enthalpy, dry bulb or network signal.
16. Current time and date.
17. Occupied/unoccupied time schedules with allowances for holiday/ event dates and duration.
18. Three types of service modes including timers normal (all time delays,) timers fast (all time delays 20 seconds,) and normal.

L. Open Communications Protocol – The unit control system shall have the ability to communicate to an independent Building Management System (BMS) through a direct BACnet MSTP It shall use only standard BACnet objects. Proprietary BACnet objects shall not be allowed. BACnet communications shall conform to the BACnet protocol (ANSI/ASHRAE 135-2001.) A BACnet Protocol Implementation Conformance Statement (PICS) shall be provided. Multiple units may be connected in a common communications network.

M. The independent BMS system shall have access to [quantity from specification] “read only’ variables and [quantity from specification] “read & and write” variables. Communications shall not require field mounting of any additional sensors or devices at the unit. The BMS system shall be capable of interacting with the individual rooftop controllers in the following ways.
1. Monitor controller inputs, outputs, set points, parameters and alarms.
2. Set controller set points and parameters.
3. Clear alarms.
4. Reset the cooling and heating discharge air temperature set point.
5. Reset the duct static pressure set point (VAV units).
6. Set the heat/cool changeover temperature (VAV and CAV-DTC units).
7. Set the representative zone temperature (CAV-ZTC units).

N. To It will be the responsibility of the Systems Integrating Contractor to integrate the rooftop data into the BMS control logic and interface stations.

O. Refrigeration capacity control shall be accomplished by staging of the unit's multiple compressors. Unit shall be equipped with a 120V terminal strip for field supplied and installed controls.

2.15 WARRANTY

A. The manufacturer shall provide 12 month parts only warranty. Defective parts will be repaired or replaced during the warranty period at no charge. The warranty period shall commence at start up, or 6 months after shipment, whichever occurs first.

B. The manufacturer will provide extended 48 month parts only warranty on the compressor.

C. The manufacturer will provide extended 108 month parts only warranty on the heat exchanger.

PART 3 – EXECUTION

A. Install in accordance with manufacturer's instructions.

END OF SECTION 238235

SECTION 238350 – POWER VENTILATORS

PART 1 - GENERAL

1.1 RELATED DOCUMENTS

A. Drawings and general provisions of the Contract, including General and Supplementary Conditions, Division 01 Specification Sections, section 230100 - General HVAC Requirements, section 230500 – Basic Mechanical Materials and Methods shall apply to this Section.

B. All fans shall be AMCA certified for air and sound ratings.

PART 2 - PRODUCTS

2.1 EXHAUST FANS

A. Provide exhaust fans as indicated on drawings and schedule.

B. Provide accessories as indicated on schedule.

C. Equivalent by Greenheck, Loren Cook, or Penn Ventilation.

D. See **FAN SCHEDULE** on construction drawings.

END OF SECTION 238350

CJD Engineering LLC 2225 W. Chesterfield Blvd., Suite. 200 Springfield, MO 65807 (417) 877-1700 Fax: (417) 324-7735

SECTION 23 8400– VARIABLE AIR VOLUME TERMINAL UNITS

PART 1 - GENERAL

1.1 RELATED DOCUMENTS

A. Drawings and general provisions of the Contract, including General and Supplementary Conditions and Division 01 Specification Sections, apply to this Section.

1.2 SECTION INCLUDES

A. Single duct terminal units.
   1. Variable volume.
   2. Constant volume.

B. Fan powered terminal units.
   1. Parallel flow (variable volume).
   2. Series flow (constant volume).

C. Integral heating coils.
   1. Electric resistance.

D. Integral terminal unit controls.
   1. Direct digital.

1.3 REFERENCES

A. NFPA 90A - Installation of Air Conditioning and Ventilation Systems.

B. UL 181 - Factory-Made Air Ducts and Connectors.

C. NFPA 70 - Electric Duct Heaters.

D. UL 1995, Heating and Cooling Equipment.

E. CUL C22.2 No. 236, Heating and Cooling Equipment.

F. AHRI 880 - Air-Conditioning and Refrigeration Institute Standard Rating Conditions for Air Terminals

G. ASTM A 527 (Steel Sheet, Zinc Coated Galvanized).

H. A-A-1419 or F-F-310 Federal specification (filter element, Air conditioning, Viscous-impingement or Dry type, replaceable), Tested per UL 900.

1.4 SUBMITTALS

A. Submit shop drawings and product data sheets indicating configuration, general assembly, and materials used in fabrication.

B. Submit product performance data indicating design air flow, minimum static pressure drop, fan operating condition.

CJD Engineering LLC 2225 W. Chesterfield Blvd., Suite. 200 Springfield, MO 65807 (417) 877-1700 Fax: (417) 324-7735

C. Submit sound power and noise criteria (NC) values for radiated and discharge paths.

1.5 QUALIFICATIONS

A. Manufacturer: The company manufacturing the products specified in this section shall have a minimum of ten years' experience producing products of this type.

1.6 SYSTEM RESPONSIBILITY

A. The contractor shall be responsible for any and all costs associated with any and all changes resulting from the use of a supplier other than the listed acceptable manufacturers.

1.7 WARRANTY

A. Provide manufacturer's parts warranty for one year from unit start-up or eighteen months from unit shipment, whichever is shorter.

PART 2 - PRODUCTS

2.1 MANUFACTURERS

A. General
1. Manufacturer shall participate in the AHRI Certification program. Unit performance data shall be rated in accordance with AHRI Standard 880. The manufacturer shall display the AHRI Symbol on all units.
2. Single and dual duct terminal units shall be listed as an entire assembly.
3. Fan powered terminal units shall be listed as an entire assembly.

B. Acceptable Manufacturer
1. Daikin, Krueger, Titus, Nailor or pre-bid approved equal.

2.2 MANUFACTURED UNITS

A. Single duct terminal units.
1. Ceiling mounted primary air control terminal units for connection to a single pressure duct of a central air distribution system. Terminals units may be provided with controls and integral heating coils.

B. Fan powered terminal units.
1. Ceiling mounted primary and recirculated air control terminal unit for connection to a single pressure duct of a central air distribution system. Terminals units may be provided with controls and integral heating coils.

C. Identify each terminal unit with clearly marked identification label and airflow indicator. Label shall include unit nominal air flow, maximum factory-set air flow, minimum factory-set air flow, and coil type.

2.3 FABRICATION

A. Casings: Units shall be completely factory-assembled, manufactured of corrosion protected steel, and fabricated with a minimum of 18-gauge metal on the high pressure (inlet) side of the terminal unit damper and 22-gauge metal on the low pressure (outlet) side and unit casing.

CJD Engineering LLC 2225 W. Chesterfield Blvd., Suite. 200 Springfield, MO 65807 (417) 877-1700 Fax: (417) 324-7735

B. Plenum air filters shall be provided on all fan powered units.

C. INSULATION - The interior surface of unit casing is acoustically and thermally lined with a minimum of 1" closed cell insulation. The closed cell insulation shall allow for cleaning of the terminal unit interior surfaces. Insulation shall meet NFPA-90A, UL 181 and bacteriological standard ASTM C 665.

D. INSULATION EDGE TREATMENT - All cut edges of insulation shall completely enclosed by metal to arrest cut fibers and prevent erosion into the airstream.

E. Assembly: Primary air control damper, airflow sensor, fans, controls and optional heating coil in single cabinet.

F. Rectangular Supply Air Outlet Connections: Rectangular outlet connections for single duct units shall be slip and drive type. Rectangular outlet connections for dual duct and fan powered units shall be flanged type.

2.4 PRIMARY AIR CONTROL DAMPER ASSEMBLY

A. Locate primary air control damper assembly inside unit casing. Construct the damper assembly from extruded aluminum and/or a minimum 20 gauge galvanized steel components. Maximum damper leak rate shall not exceed 1% of damper nominal CFM at 4 inch wg. differential.

B. Provide damper assembly with integral flow sensor. Flow sensor shall be provided regardless of control type. Flow sensor shall be a multi-point, averaging, ring or cross type. Bar or single point sensing type is not acceptable.

2.5 HEATING COILS

A. Electric Resistance Heating Coil: Coil shall be factory installed and wired and shall be constructed of open-wire type resistance heat elements. Coils shall be provided with primary and secondary over-temperature protection. Coils shall be constructed for single point power connection. Controls shall consist of an integral control box which includes a 24 VAC transformer and contactors. Electric heat coil shall be installed at the terminal unit supply air outlet connection.
   1. All single duct terminal unit electric heat coils shall be furnished with an airflow switch to disable the coil upon a low flow condition.

B. Capacity: Provide coils in capacities as scheduled on the drawings.

2.6 FAN ASSEMBLY

A. Fan assembly shall be forward curved centrifugal fan with direct drive permanently lubricated, permanent split-capacitor type, thermally protected motor. Motor must be capable of continuous operation under maximum fan load with no external static pressure. Provide unit with a SCR motor speed adjustment that is factory-installed and wired to the fan motor.

B. Fan motor horsepower shall not exceed the horsepower scheduled for each unit.

C. Internally suspend and isolate fan motor assembly from unit casing by using rubber isolators or torsion flex mounting legs.

CJD Engineering LLC 2225 W. Chesterfield Blvd., Suite. 200 Springfield, MO 65807 (417) 877-1700 Fax: (417) 324-7735

D. Unit shall be equipped with a fan motor disconnect switch which breaks both legs of power entering the control box.

2.7 WIRING

A. Factory install and wire power line fusing, a disconnect switch and a 24 VAC transformer for control voltage on fan powered direct digital or electronic control units. Provide terminal strip in control box for field wiring of thermostat and power source.

B. Factory install and wire all terminal unit fan controls. Install electrical components in control box with removable cover. Incorporate single point electrical connection to power source.

2.8 DIRECT DIGITAL VAV CONTROLS

A. Direct Digital Controls
1. General. Direct digital controls (DDC) and factory costs to mount, calibrate and test the system shall be the responsibility of Temperature Control (TC) / Building Automation System (BAS) Contractor.
2. Terminal unit manufacturer shall provide price for factory mounting, continuity check, calibrating, and testing of direct digital controls to the automatic temperature controls contractor. Field mounted DDC controls are not acceptable.
3. Multi-point, multi-axis flow ring or cross sensor to be furnished and mounted by terminal unit manufacturer. Single point or flow bar sensors are not acceptable. Flow sensing device shall be capable of maintaining airflow to within +/- 5 percent of rated unit airflow setpoint when installed with 1.5 duct diameters straight duct, of the same size as the primary airflow inlet, upstream from the unit.

B. VARIABLE AIR VOLUME (VAV) TERMINAL UNIT CONTROL
1. The VAV terminal units shall be individually controlled by a DDC VAV controller per VAV terminal unit. The DDC VAV controller, damper motor, transducer and transformer shall be supplied by the BAS contractor and furnished to the terminal unit supplier. The cost to factory mount, calibrate and test the controller, transducer, transformer and actuator shall be coordinated prior to bid day and included in the BAS price.
   a. To assure proper operation and control, the BAS contractor as part of this bid shall recalibrate the transducers six (6) months after acceptance of the BAS system to correct any deviations as a result of transducer drift.
2. Submit a copy of the calibration report to the Engineer, Mechanical Contractor, Test, Adjust and Balance Contractor and Owner.
   a. Setpoint Control - The BAS shall edit the zone space temperature setpoint of each VAV box. The zone temperature setpoint shall be operator adjustable. Individual zone setpoint and control logic shall reside at the zone level, and not be dependent upon the BAS for control. In the event of communication loss, the box will continue to control to current setpoints.
   b. Cooling Valve Control - The BAS shall control the cooling air valve to a fully open, fully closed, maximum CFM, or minimum CFM position based on operator commands. The operator shall also have the capability to adjust the maximum & minimum airflow limits of the air valve through the BAS.
   c. Operating Mode - The BAS shall place the box in either the occupied or unoccupied mode based on an operator adjustable time schedule. Separate heating & cooling setpoints shall be editable for each mode through the BAS. Other modes available for special applications shall include full open, full closed, maximum flow, and minimum flow.

CJD Engineering LLC 2225 W. Chesterfield Blvd., Suite. 200 Springfield, MO 65807 (417) 877-1700 Fax: (417) 324-7735

d. Control Offset - The BAS shall be capable of offsetting the cooling or heating setpoints of one or more groups of boxes by an operator adjustable amount. This capability will allow for automatic zone setpoint changes based on system requirements, such as demand limiting.
e. Automatic Calibration - The system shall automatically calibrate its air flow sensing & air valve position measurement system at system startup and on a scheduled basis.
f. Terminal unit status reports - For each terminal unit, the BAS shall provide an operating status summary of all unit sensed values (zone temperature, CFM, etc.), setpoints, and modes.
g. Terminal unit group report - For each group of VAV terminal units, the BAS shall report the group mode, heating and cooling airflow, average zone temperature, minimum zone temperature, and maximum zone temperature. The report shall also display for each terminal unit in the group the present temperature control setpoints and the current zone temperature.

3. Terminal box diagnostics.
   a. If zone temperature sensor input fails above its high range, unit shall control at its maximum CFM setpoint. If sensor input fails below its low range, unit shall control to its minimum CFM setpoint.
   b. In both cases, all heat outputs shall be disabled. a diagnostic message shall be displayed upon operator inquiry.
   c. If flow measuring system fails, unit shall automatically convert to a pressure dependent, damper position based algorithm. Diagnostic message shall be displayed upon operator inquiry.
   d. If zone temperature setpoint potentiometer on zone sensor fails, unit shall automatically control to programmed occupied setpoints. Diagnostic message shall be displayed upon operator inquiry.
   e. If communications are lost, controller shall continue to operate in the current mode of operation. All setpoints shall be retained in nonvolatile memory. If communications are not restored within 15 minutes, unit shall automatically initiate a reset and then calibrate the flow sensor and damper position.

C. Zone Sensors
1. The zone sensor shall communicate to the VAV controllers using spread spectrum radio technology. Simple radio technology is not acceptable due to a high likelihood of interference. Line of sight communication devices are not acceptable due to space design restrictions.
2. The averaging scheme shall provide the average of the temperatures sensed by the zone sensors. The setpoints of each of the sensors shall be averaged using a scheme that weights each sensor's input. Each sensor shall be able to have a number of votes assigned to it to give it more priority in the final calculations of the setpoint required.
3. Zone sensor relocations are at the owner/engineer's discretion and can occur at anytime throughout the length of the project warranty period.
4. The zone sensor shall have the following features:
   a. Zone setpoint adjustment.
   b. Night setback temperature override button to provide occupied conditions during unoccupied times.
   c. Night setback override cancel button to end the override condition.
   d. The sensor shall have a backup sensor assigned to it in case of a failure.
   e. The sensor shall be capable of being relocated with no changes to the wiring.
   f. The sensor battery life shall be a minimum of 1 year. The sensor shall send an indication of low battery condition approximately one month prior to failure.

CJD Engineering LLC 2225 W. Chesterfield Blvd., Suite. 200 Springfield, MO 65807 (417) 877-1700 Fax: (417) 324-7735

g. If a wireless zone temperature sensor fails, the UCM shall remove it from the averaging calculation and use the remaining sensors if applicable. If averaging is not implemented the UCM shall switch to the backup zone sensor. VAV controller shall send an alarm message to the building automation system. A report shall be printable that shows sensor assignments by serial number, time since the last transmission was received and the signal strength of the transmission.

2.9 TESTING/VERIFICATON

A. Factory run-test all fan powered units.

PART 3 - EXECUTION

3.1 INSTALLATION

A. Install in accordance with manufacturer's instructions.

3.2 ADJUSTING

A. Reset volume with damper operator attached to assembly allowing flow range modulation from 100 percent of design air flow to 25 percent nominal air flow for cooling only units and 30 percent for units with heating coils.

END OF SECTION 238400

SECTION 238550 - DIFFUSERS, REGISTERS, AND GRILLES

PART 1 - GENERAL

1.1 RELATED DOCUMENTS

A. Drawings and general provisions of the Contract, including General and Supplementary Conditions, Division 01 Specification Sections, section 230100 - General HVAC Requirements, section 230500 – Basic Mechanical Materials and Methods shall apply to this Section.

1.2 SUBMITTALS

A. All grilles registers and diffusers shall be submitted with the following information for Engineers approval prior to installation:

1. Airflow.
2. Static Pressure Drop (maximum of 0.08" allowed).
3. Noise Criteria Rating (maximum of 30 NC allowed).
4. Throw - 150 FPM 100 FPM and 50 FPM.

B. Any submittal found delinquent of requested information shall be returned for resubmittal.

PART 2 - PRODUCTS

2.1 MANUFACTURERS

A. Manufacturers listed as equivalents shall be subject to compliance with all requirements. Manufacturers offering products that may be incorporated into the Work include, but are not limited to, manufacturers specified. The specified or scheduled item shall represent the minimum level of quality.

2.2 DIFFUSERS, REGISTERS, AND GRILLES

A. Provide grilles, diffusers, and registers as shown on drawings and hereinafter specified. See drawings for size quantity.

B. All dimensions indicated on drawings for diffuser neck sizes, face sizes, etc. are generic in nature and should be verified with equipment manufacturer prior to bid letting. Contractor shall be held responsible for compliance with specifications. Should a change be required to remain in compliance with specifications all costs incurred shall be paid by mechanical contractor.

C. All registers and grilles shall have angled blades.

D. Equivalent by Anemostat, Carnes, Krueger, Price, Nailor, Titus, and Tuttle & Bailey.

E. Refer to **AIR DEVICE SCHEDULE** on construction drawings.

PART 3 - EXECUTION

3.1 DIFFUSERS, REGISTERS, AND GRILLES

CJD Engineering LLC 2225 W. Chesterfield Blvd., Suite. 200 Springfield, MO 65807 (417) 877-1700 Fax: (417) 324-7735

A. Drawings indicate general arrangement of ducts, fittings, and accessories. Air outlet and inlet locations have been indicated to achieve design requirements for air volume, noise criteria, airflow pattern, throw, and pressure drop. Make final locations where indicated, as much as practicable.

B. For units installed in lay-in ceiling panels, locate units in the center of panel. Where architectural features or other items conflict with installation, notify Architect for a determination of final location.

C. Support all grilles, registers and diffusers from tee bars or structure so as not to stress ceiling tile. Provide proper mounting supplied and arrangements for areas shown. Check architectural drawings for ceiling and wall construction.

D. Set all units with rubber gaskets for air tight connection with mounting surface. Unless specified or noted otherwise grilles and registers mounted on ducts shall have standard margins.

E. Install all return and exhaust grilles and registers with face of grille curve or angle toward line of sight to avoid seeing into space behind louver.

F. Install all registers in masonry construction so that bottom of register starts with a masonry construction joint.

G. Install diffusers, registers, and grilles level and plumb.

H. Install diffusers, registers, and grilles with airtight connections to ducts and to allow service and maintenance of dampers, air extractors, and fire dampers.

I. After installation, adjust diffusers, registers, and grilles to air patterns indicated, or as directed, before starting air balancing.

END OF SECTION 238550

CJD Engineering LLC 2225 W. Chesterfield Blvd., Suite. 200 Springfield, MO 65807 (417) 877-1700 Fax: (417) 324-7735

SECTION 230923 - DIRECT-DIGITAL CONTROLS SYSTEM

PART 1 – GENERAL

1.0 SECTION INCLUDES
1.1 DESCRIPTION
1.2 APPROVED CONTROL SYSTEM MANUFACTURERS
1.3 QUALITY ASSURANCE
1.4 SUBMITTALS
1.5 WARRANTY
1.6 OWNERSHIP OF PROPRIETARY MATERIAL

1.1 DESCRIPTION

A. General: The control system shall consist of a high-speed, peer-to-peer network of DDC controllers, a control system server, and a web-based operator interface.
   1. The BAS is to prove an enterprise level solution that stores the database and web application on the owner provided server. This enterprise level system shall have unlimited concurrent users. All software tools will be placed on the server for the owner to keep. No additional annual maintenance or subscription fees required to operate.

B. System software shall be based on a server/thin client architecture, designed around the open standards of web technology. The control system server shall be accessed using a Web browser over the control system network, the owner's local area network, and (at the owner's discretion) over the Internet. The intent of the thin-client architecture is to provide operators complete access to the control system via a Web browser. No special software other than a web browser shall be required to access graphics, point displays, and trends, configure trends, configure points and controllers, or to download programming into the controllers.

C. System shall use the BACnet protocol for communication to the operator workstation or web server and for communication between control modules. I/O points, schedules, setpoints, trends and alarms specified in the contract documents shall be BACnet objects.

1.2 APPROVED CONTROL SYSTEM MANUFACTURERS

A. Automated Logic
B. Submit substitutions for approval

1.3 QUALITY ASSURANCE

A. Installer and Manufacturer Qualifications
   1. Installer shall have an established working relationship with Control System Manufacturer.
   2. Installer shall have successfully completed Control System Manufacturer’s control system training.
   3. Installer must have local office within 60 miles of construction site.
   4. Installer must have stocked parts and additional control modules at local office.
   5. Installer must have a minimum of 5 qualified technicians available in local office for technical support.

B. Miscellaneous Requirements
   1. All field devices and sensors to be wired. No wireless accessories, devices, routers or other devices on the BAS are acceptable.

CJD Engineering LLC 2225 W. Chesterfield Blvd., Suite. 200 Springfield, MO 65807 (417) 877-1700 Fax: (417) 324-7735

2. The server software must be an enterprise level software package with trending capacity of a minimum of 1 year.
3. Dynamic thermal imaging floorplans to show setpoint versus room temperature is required.
4. Room sensors with temp and humidity are required to be combo sensors.

1.4 SUBMITTALS

A. Product Data and Shop Drawings: Meet requirements of Section 01 30 00 on Shop Drawings, Product Data, and Samples. In addition, the contractor shall provide shop drawings or other submittals on hardware, software, and equipment to be installed or provided. No work may begin on any segment of this project until submittals have been approved for conformity with design intent. Provide drawings as AutoCAD compatible files on magnetic or optical disk (file format: .DWG, .DXF, .VSD, or comparable) and three 11” x 17” prints of each drawing. Submittal approval does not relieve Contractor of responsibility to supply sufficient quantities to complete work. Submittals shall be provided within 4 weeks of contract award. Submittals shall include:

1. DDC System Hardware
   a. A complete bill of materials to be used indicating quantity, manufacturer, model number, and relevant technical data of equipment to be used.
   b. Manufacturer’s description and technical data such as performance curves, product specifications, and installation and maintenance instructions for items listed below and for relevant items not listed below:
      i. Direct digital controllers (controller panels)
      ii. Transducers and transmitters
      iii. Sensors (including accuracy data)
      iv. Actuators
      v. Valves
      vi. Relays and switches
      vii. Control panels
      viii. Power supplies
      ix. Batteries
      x. Operator interface equipment
      xi. Wiring
   c. Wiring diagrams and layouts for each control panel. Show termination numbers.
   d. Schematic diagrams for all field sensors and controllers. Provide floor plans of all sensor locations and control hardware. Riser diagrams showing control network layout, communication protocol, and wire types.
   e. Schematic diagrams for all control, communication, and power wiring. Provide a schematic drawing of the central system installation. Label all cables and ports with computer manufacturers’ model numbers and functions. Show interface wiring to control system.
   f. Network riser diagrams of wiring between central control unit and control panels.

B. Schedules
   1. Communicate on a weekly basis the schedule and progression of project.

C. Project Record Documents. Upon completion of installation, submit three copies of record (as-built) documents. The documents shall be submitted for approval prior to final completion and shall include:

1. Project Record Drawings. As-built versions of submittal shop drawings provided as AutoCAD compatible files on magnetic or optical media (file format: .DWG, .DXF, .VSD, or comparable) and as 11" x 17" prints.
2. Testing and Commissioning Reports and Checklists. Completed versions of reports, checklists, and trend logs used to meet requirements of Section 23 09 23 Article3.17(Control System Demonstration and Acceptance).
3. Operation and Maintenance (O&M) Manual.
4. As-built versions of submittal product data.
5. Licenses, guarantees, and warranty documents for equipment and systems.

D. Training Materials:. Training shall be furnished via instructor-led sessions, computer-based training, or web-based training. Engineer will modify course outlines and materials if necessary to meet Owner's needs.

1.5 WARRANTY

A. Warrant work as follows:
1. Warrant labor and materials for specified control system free from defects for a period of 12 months after final acceptance. Control system failures during warranty period shall be adjusted, repaired, or replaced at no additional cost or reduction in service to Owner. Respond during normal business hours within 24 hours of Owner's warranty service request.
2. Work shall have a single warranty date, even if Owner receives beneficial use due to early system start-up. If specified work is split into multiple contracts or a multi-phase contract, each contract or phase shall have a separate warranty start date and period.
3. If the engineer determines that equipment and systems operate satisfactorily at the end of final start-up, testing, and commissioning phase, the engineer will certify in writing that control system operation has been tested and accepted in accordance with the terms of this specification. Date of acceptance shall begin warranty period.
4. Provide updates to operator workstation or web server software, project-specific software, graphic software, database software, and firmware that resolve the contractor-identified software deficiencies at no charge during warranty period. If available, Owner can purchase in-warranty service agreement to receive upgrades for functional enhancements associated with above-mentioned items. Do not install updates or upgrades without Owner's written authorization.
5. Exception: Contractor shall not be required to warrant reused devices except those that have been rebuilt or repaired. Installation labor and materials shall be warranted. Demonstrate operable condition of reused devices at time of Engineer's acceptance.

1.6 OWNERSHIP OF PROPRIETARY MATERIAL

A. Project-specific software and documentation shall become Owner's property. This includes, but is not limited to:
1. Graphics tool & associated graphics
2. Record drawings
3. Database management tool & databse
4. Application programming code & programming tool
5. Documentation

PART 2: PRODUCTS

2.0 SECTION INCLUDES
2.1 MATERIALS
2.2 COMMUNICATION

2.3 OPERATOR INTERFACE
2.4 CONTROLLER SOFTWARE
2.5 CONTROLLERS

2.1 MATERIALS

A. Use new products the manufacturer is currently manufacturing and selling for use in new installations. Do not use this installation as a product test site unless explicitly approved in writing by Owner. Spare parts shall be available for at least five years after completion of this contract.

2.2 COMMUNICATION

A. Control products, communication media, connectors, repeaters, hubs, and routers shall comprise a BACnet internetwork. Controller and operator interface communication shall conform to ANSI/ASHRAE Standard 135, BACnet.

B. Install new wiring and network devices as required to provide a complete and workable control network.

C. Each controller shall have a communication port for temporary connection to a laptop computer or other operator interface. Connection shall support memory downloads and other commissioning and troubleshooting operations.

D. Internetwork operator interface and value passing shall be transparent to internetwork architecture.
   1. An operator interface connected to a controller shall allow the operator to interface with each internetwork controller as if directly connected. Controller information such as data, status, and control algorithms shall be viewable and editable from each internetwork controller.

E. System shall be expandable to at least twice the required input and output objects with additional controllers, associated devices, and wiring.

2.3 OPERATOR INTERFACE

A. Operator Interface. Web server shall reside on high-speed network with building controllers. Each standard browser connected to server shall be able to access all system information. The system is required to have HTML5 graphics. The Operator Workstation or server shall conform to the BACnet Operator Workstation (B-OWS) or BACnet Advanced Workstation (B-AWS) device profile as specified in ASHRAE/ANSI 135 BACnet Annex L.

B. Communication. Web server or workstation and controllers shall communicate using BACnet protocol. Web server or workstation and control network backbone shall communicate using ISO 8802-3 (Ethernet) Data Link/Physical layer protocol and BACnet/IP addressing as specified in ANSI/ASHRAE 135, BACnet Annex J.

C. System Software.
   1. Operating System. Web server or workstation shall have an industry-standard professional-grade operating system. Operating system shall meet or exceed the DDC System manufacturer’s minimum requirements for their software. Acceptable systems include

Microsoft Windows 7, 8 or 10, Windows Server 2012 or 2016, Red Hat Enterprise Linux, or Ubuntu Desktop 12.04.

2. System Graphics. The operator interface software shall be graphically based and shall include at least one graphic per piece of equipment or occupied zone, graphics for each chilled water and hot water system, and graphics that summarize conditions on each floor of each building included in this contract. The floorplan graphics must indicate thermal comfort on floor plan summary graphics using dynamic colors to represent zone temperature relative to zone setpoint.
    a. Functionality. Graphics shall allow operator to monitor system status, to view a summary of the most important data for each controlled zone or piece of equipment, to use point-and-click navigation between zones or equipment, and to edit setpoints and other specified parameters.
    b. Animation. Graphics shall be able to animate by displaying different image files for changed object status.
    c. Alarm Indication. Indicate areas or equipment in an alarm condition using color or other visual indicator.
    d. Format. Graphics shall be saved in an industry-standard format such as BMP, JPEG, PNG, or GIF. Web-based system graphics shall be viewable on browsers compatible with World Wide Web Consortium browser standards. Web graphic format shall require no plug-in or shall only require widely available no-cost plug-ins (such as Adobe Flash).
3. Custom Graphics. Custom graphic files shall be created with the use of a graphics generation package furnished with the system. The graphics generation package shall be a graphically based system that uses the mouse to create and modify graphics that are saved in the same formats as are used for system graphics.
4. Graphics Library. Furnish a complete library of standard HVAC equipment graphics such as chillers, boilers, air handlers, terminals, fan coils, and unit ventilators. This library also shall include standard symbols for other equipment including fans, pumps, coils, valves, piping, dampers, and ductwork. The library shall be furnished in a file format compatible with the graphics generation package program.

D. System Applications. System shall provide the following functionality to authorized operators as an integral part of the operator interface or as stand-alone software programs.
1. Automatic System Database Configuration. Each workstation or web server shall store on its hard disk a copy of the current system database, including controller firmware and software. Stored database shall be automatically updated with each system configuration or controller firmware or software change.
2. Manual Controller Memory Download. Operators shall be able to download memory from the system database to each controller.
3. System Configuration. The workstation software shall provide a method of configuring the system. This shall allow for future system changes or additions by users under proper password protection. Operators shall be able to configure the system.
4. On-Line Help. Provide a context-sensitive, on-line help system to assist the operator in operating and editing the system. On-line help shall be available for all applications and shall provide the relevant data for that particular screen. Additional help information shall be available through the use of hypertext.
5. Security. Each operator shall be required to log on to the system with user name and password in order to view, edit, add, or delete data.
    a. Operator Access. The user name and password combination shall define accessible viewing, editing, adding, and deleting privileges for that operator. Users with

system administrator rights shall be able to create new users and edit the privileges of all existing users.

b. Automatic Log Out. Automatically log out each operator if no keyboard or mouse activity is detected. This auto logoff time shall be user adjustable.

c. Encrypted Security Data. Store system security data including operator passwords in an encrypted format. System shall not display operator passwords.

6. System Diagnostics. The system shall automatically monitor the operation of all building management panels and controllers. The failure of any device shall trigger an alarm.
7. Alarm Processing. System input and status objects shall be configurable to alarm on departing from and on returning to normal state. Operator shall be able to enable or disable each alarm and to configure alarm limits, alarm limit differentials, alarm states, and alarm reactions for each system object. Configure and enable alarm points as specified in Section 23 09 93 (Sequences of Operation). Alarms shall be BACnet alarm objects and shall use BACnet alarm services.
8. Alarm and Event log. Operators shall be able to view all system alarms and changes of state from any location in the system. Events shall be listed chronologically. An operator with the proper security level may acknowledge and delete alarms, and archive closed alarms to the workstation or web server hard disk.
9. Trend Logs. The operator shall be able to configure trend sample or change of value (COV) interval, start time, and stop time for each system data object and shall be able to retrieve data for use in spreadsheets and standard database programs for a minimum of 90 days of historical data. Controller shall sample and store trend data and shall be able to archive data to the hard disk. Configure trends as specified in Section 23 09 93 (Sequences of Operation). Trends shall be BACnet trend objects.
10. Reports and Logs. Operator shall be able to select, to modify, to create, and to print reports and logs. Operator shall be able to store report data in a format accessible by standard spreadsheet and word processing programs.
11. Environmental Index. System shall monitor all occupied zones and compile an index that provides a numerical indication of the environmental comfort within the zone. The system shall also compute an average comfort index for every building included in this contract and maintain trendlogs of these building environmental indices. Similarly, the system shall compute the percentage of occupied time that comfortable conditions were maintained within the zones. Through the UI the user shall be able to add a weighting factor to adjust the contribution of each zone to the average index based upon the floor area of the zone, importance of the zone, or other static criteria.

E. Workstation Application Editors. Each PC or browser workstation shall support editing of all system applications. The applications shall be downloaded and executed at one or more of the controller panels.

1. Controller. Provide a full-screen editor for each type of application that shall allow the operator to view and change the configuration, name, control parameters, and set points for all controllers.
2. Scheduling. An editor for the scheduling application shall be provided at each workstation. Provide a method of selecting the desired schedule and schedule type. Exception schedules and holidays shall be shown clearly on the calendar. The start and stop times for each object shall be adjustable from this interface.
3. Custom Application Programming. Provide the tools to create, edit, debug, and download custom programs. System shall be fully operable while custom programs are edited, compiled, and downloaded. Programming language shall have the following features:

a. Language. Language shall be graphically based and shall use function blocks arranged in a logic diagram that clearly shows control logic flow. Function blocks

shall directly provide functions listed below, and operators shall be able to create custom or compound function blocks.

b. Programming Environment. Tool shall provide a full-screen, cursor-and-mouse-driven programming environment that incorporates word processing features such as cut and paste. Operators shall be able to insert, add, modify, and delete custom programming code, and to copy blocks of code to a file library for reuse in other control programs.

c. Independent Program Modules. Operator shall be able to develop independently executing program modules that can disable, enable and exchange data with other program modules.

2.4 CONTROLLER SOFTWARE

A. Furnish the following applications for building and energy management. All software application shall reside and operate in the system controllers. Applications shall be editable through operator workstation, web browser interface, or engineering workstation.

B. Scheduling. Provide the capability to execute control functions according to a user created or edited schedule. Each schedule shall provide the following schedule options as a minimum:

1. Weekly Schedule. Provide separate schedules for each day of the week. Each schedule shall be able to include up to 5 occupied periods (5 start-stop pairs or 10 events).
2. Exception Schedules. Provide the ability for the operator to designate any day of the year as an exception schedule. Exception schedules may be defined up to a year in advance. Once an exception schedule has executed, the system shall discard and replace the exception schedule with the standard schedule for that day of the week.
3. Holiday Schedules. Provide the capability for the operator to define up to 24 special or holiday schedules. These schedules will be repeated each year. The operator shall be able to define the length of each holiday period.

C. Remote Communication. System shall automatically contact operator workstation or server on receipt of critical alarms. If no network connection is available, system shall use a modem connection.

D. PID Control. System shall provide direct- and reverse-acting PID (proportional-integral-derivative) algorithms. Each algorithm shall have anti-windup and selectable controlled variable, setpoint, and PID gains. Each algorithm shall calculate a time-varying analog value that can be used to position an output or to stage a series of outputs. The calculation interval, PID gains, and other tuning parameters shall be adjustable by a user with the correct security level.

E. Anti-Short Cycling. All binary output objects shall be protected from short cycling by means of adjustable minimum on-time and off-time settings.

2.5 CONTROLLERS

A. BACnet.

1. Building Controllers (BCs). Each BC shall conform to BACnet Building Controller (B-BC) device profile as specified in ANSI/ASHRAE 135, BACnet Annex L, and shall be listed as a certified B-BC in the BACnet Testing Laboratories (BTL) Product Listing.
2. BACnet Communication.
   a. Each BC shall reside on or be connected to a BACnet network using ISO 8802-3 (Ethernet) Data Link/Physical layer protocol and BACnet/IP addressing.
   b. BACnet routing shall be performed by BCs or other BACnet device routers as necessary to connect BCs to networks of AACs and ASCs.

c. Each AAC shall reside on a BACnet network using ISO 8802-3 (Ethernet) Data Link/Physical layer protocol with BACnet/IP addressing, or it shall reside on a BACnet network using the ARCNET or MS/TP Data Link/Physical layer protocol.
d. Each ASC shall reside on a BACnet network using the ARCNET or MS/TP Data Link/Physical layer protocol.
e. Each SA shall reside on a BACnet network using the ARCNET or MS/TP Data Link/Physical layer protocol.
f. Each SS shall reside on a BACnet network using ISO 8802-3 (Ethernet) Data Link/Physical layer protocol with BACnet/IP addressing, or it shall reside on a BACnet network using ARCNET or MS/TP Data Link/Physical layer protocol.

B. Communication
1. Service Port. Each controller shall provide a service communication port for connection to a Portable Operator's Terminal. Connection shall be extended to space temperature sensor ports where shown on drawings.

C. Memory.
1. Controller memory shall support operating system, database, and programming requirements.
2. Each BC and AAC shall retain BIOS and application programming for at least 72 hours in the event of power loss.
3. Each ASC and SA shall use nonvolatile memory and shall retain BIOS and application programming in the event of power loss. System shall automatically download dynamic control parameters following power.

D. Local Control Panels.
1. All indoor control cabinets shall be fully enclosed NEMA 1 construction with (hinged door) key-lock latch and removable subpanels. A single key shall be common to all field panels and subpanels.
2. Provide ON/OFF power switch with overcurrent protection for control power sources to each local panel.

PART 3: EXECUTION

3.0 SECTION INCLUDES
3.1 EXAMINATION
3.2 PROTECTION
3.3 COORDINATION
3.4 GENERAL WORKMANSHIP
3.5 FIELD QUALITY CONTROL
3.6 EXISTING EQUIPMENT
3.7 WIRING
3.8 COMMUNICATION WIRING
3.9 PROGRAMMING
3.10 CONTROL SYSTEM DEMONSTRATION AND ACCEPTANCE
3.11 CLEANING
3.12 TRAINING
3.13 SEQUENCES OF OPERATION

3.14 START-UP AND CHECKOUT PROCEDURES

3.1 EXAMINATION

A. The contractor shall inspect the site to verify that equipment may be installed as shown. Any discrepancies, conflicts, or omissions shall be reported to the owner or engineer for resolution before rough-in work is started.

B. The contractor shall examine the drawings and specifications for other parts of the work. If head room or space conditions appear inadequate—or if any discrepancies occur between the plans and the contractor's work and the plans and the work of others—the contractor shall report these discrepancies to the engineer and shall obtain written instructions for any changes necessary to accommodate the contractor's work with the work of others. Any changes in the work covered by this specification made necessary by the failure or neglect of the contractor to report such discrepancies shall be made by—and at the expense of—this contractor.

3.2 PROTECTION

A. The contractor shall protect all work and material from damage by his/her work or employees and shall be liable for all damage thus caused.

B. The contractor shall be responsible for his/her work and equipment until finally inspected, tested, and accepted. The contractor shall protect any material that is not immediately installed. The contractor shall close all open ends of work with temporary covers or plugs during storage and construction to prevent entry of foreign objects.

3.3 COORDINATION

A. Coordination with controls specified in other sections or divisions. Other sections and/or divisions of this specification include controls and control devices that are to be part of or interfaced to the control system specified in this section. These controls shall be integrated into the system and coordinated by the contractor as follows:
   1. Each supplier of a controls product is responsible for the configuration, programming, start up, and testing of that product to meet the sequences of operation.
   2. The contractor shall coordinate and resolve any incompatibility issues that arise between control products provided under this section and those provided under other sections or divisions of this specification.
   3. The contractor is responsible for providing all controls described in the contract documents regardless of where within the contract documents these controls are described.

3.4 GENERAL WORKMANSHIP

A. Install equipment, piping, and wiring/raceway parallel to building lines (i.e. horizontal, vertical, and parallel to walls) wherever possible.

B. Provide sufficient slack and flexible connections to allow for vibration of piping and equipment.

C. Install equipment in readily accessible locations as defined by Chapter 1 Article 100 Part A of the National Electrical Code (NEC).

D. Verify integrity of all wiring to ensure continuity and freedom from shorts and grounds.

E. All equipment, installation, and wiring shall comply with industry specifications and standards for performance, reliability, and compatibility and be executed in strict adherence to local codes and standard practices.

3.5 FIELD QUALITY CONTROL

A. All work, materials, and equipment shall comply with rules and regulations of applicable local, state, and federal codes and ordinances.

B. Contractor shall continually monitor the field installation for code compliance and quality of workmanship.

C. Contractor shall have work inspection by local and/or state authorities having jurisdiction over the work.

3.6 EXISTING EQUIPMENT

A. Wiring. Interconnecting control wiring shall be removed and shall become the property of the contractor unless specifically noted or shown to be reused.

B. Local Control Panels. Remove and deliver existing control panels to Owner.

C. Repair. Unless otherwise directed, the contractor is not responsible for repair or replacement of existing energy equipment and systems, valves, dampers, or actuators. Should the contractor find existing equipment that requires maintenance, the engineer is to be notified immediately.

3.7 WIRING

A. All control and interlock wiring shall comply with national and local electrical codes, and Division 26 of this specification, Where the requirements of this section differ from Division 26, the requirements of this section shall take precedence.

B. All NEC Class 1 (line voltage) wiring shall be UL listed in approved raceway according to NEC and Division 26 requirements.

C. All low-voltage wiring shall meet NEC Class 2 requirements. Low-voltage power circuits shall be subfused when required to meet Class 2 current limit.

D. Where plenum cables are used without raceway, they shall be supported from or anchored to structural members. Cables shall not be supported by or anchored to ductwork, electrical raceways, piping, or ceiling suspension systems.

E. All wire-to-device connections shall be made at a terminal block or terminal strip. All wire-to-wire connections shall be at a terminal block.

F. All wiring within enclosures shall be neatly bundled and anchored to permit access and prevent restriction to devices and terminals.

G. Maximum allowable voltage for control wiring shall be 120 V. If only higher voltages are available, the contractor shall provide step-down transformers.

H. All wiring shall be installed as continuous lengths, with no splices permitted between termination points.

3.8 COMMUNICATION WIRING

A. The contractor shall adhere to the items listed in the "Wiring" article in Part 3 of the specification.

B. All cabling shall be installed in a neat and workmanlike manner. Follow manufacturer's installation recommendations for all communication cabling.

C. Do not install communication wiring in raceways and enclosures containing Class 1 or other Class 2 wiring.

D. Contractor shall verify the integrity of the entire network following cable installation. Use appropriate test measures for each particular cable.

E. When a cable enters or exits a building, a lightning arrestor must be installed between the lines and ground. The lighting arrestor shall be installed according to manufacturer’s instructions.

F. BACnet MS/TP communications wiring shall be installed in accordance with ASHRAE/ANSI Standard 135. This includes but is not limited to:
   1. The network shall use shielded, twisted-pair cable with characteristic impedance between 100 and 120 ohms. Distributed capacitance between conductors shall be less than 100 pF per meter (30 pF per foot.)
   2. The maximum length of an MS/TP segment is 1200 meters (4000 ft) with AWG 18 cable. The use of greater distances and/or different wire gauges shall comply with the electrical specifications of EIA-485.
   3. The maximum number of nodes per segment shall be 32, as specified in the EIA 485 standard. Additional nodes may be accommodated by the use of repeaters.
   4. An MS/TP EIA-485 network shall have no T connections.

3.9 PROGRAMMING

A. Provide sufficient internal memory for the specified sequences of operation and trend logging.

B. Point Naming. Name points as shown on the equipment points list provided with each sequence of operation. See Section 23 09 93 (Sequences of Operation). If character limitations or space restrictions make it advisable to shorten the name, the abbreviations given in Appendix B to Section 23 09 93 may be used. Where multiple points with the same name reside in the same controller, each point name may be customized with its associated Program Object number. For example, "Zone Temp 1" for Zone 1, "Zone Temp 2" for Zone 2.

C. Software Programming.
   1. Provide programming for the system and adhere to the sequences of operation provided. All other system programming necessary for the operation of the system, but not specified in this document, also shall be provided by the contractor. Embed into the control program sufficient comment statements to clearly describe each section of the program. The comment statements shall reflect the language used in the sequences of operation.

3.10 CONTROL SYSTEM DEMONSTRATION AND ACCEPTANCE

A. Demonstration.
   1. Prior to acceptance, the control system shall undergo a series of performance tests to verify operation and compliance with this specification. These tests shall occur after the Contractor has completed the installation, started up the system, and performed his/her own tests.

CJD Engineering LLC 2225 W. Chesterfield Blvd., Suite. 200 Springfield, MO 65807 (417) 877-1700 Fax: (417) 324-7735

2. As each control input and output is checked, a log shall be completed showing the date, technician's initials, and any corrective action taken or needed.
3. Demonstrate compliance with sequences of operation through all modes of operation.
4. Demonstrate complete operation of operator interface.
5. Additionally, the following items shall be demonstrated:
    a. Optimum start/stop. The contractor shall supply a trend data output showing the capability of the algorithm. The change-of-value or change-of-state trends shall include the output status of all optimally started and stopped equipment, as well as temperature sensor inputs of affected areas.
    b. Operational logs for each system that indicate all set points, operating points, valve positions, mode, and equipment status shall be submitted to the architect/engineer. These logs shall cover three 48-hour periods and have a sample frequency of not more than 10 minutes. The logs shall be provided in both printed and disk formats.
6. Any tests that fail to demonstrate the operation of the system shall be repeated at a later date. The contractor shall be responsible for any necessary repairs or revisions to the hardware or software to successfully complete all tests.

B. Acceptance.
1. All tests described in this specification shall have been performed to the satisfaction of both the engineer and owner prior to the acceptance of the control system as meeting the requirements of completion. Any tests that cannot be performed due to circumstances beyond the control of the contractor may be exempt from the completion requirements if stated as such in writing by the engineer. Such tests shall then be performed as part of the warranty.

3.11 CLEANING

A. The contractor shall clean up all debris resulting from his/her activities daily. The contractor shall remove all cartons, containers, crates, etc., under his/her control as soon as their contents have been removed. Waste shall be collected and placed in a designated location.

B. At the completion of work in any area, the contractor shall clean all work, equipment, etc., keeping it free from dust, dirt, and debris, etc.

C. At the completion of work, all equipment furnished under this section shall be checked for paint damage, and any factory-finished paint that has been damaged shall be repaired to match the adjacent areas. Any cabinet or enclosure that has been deformed shall be replaced with new material and repainted to match the adjacent areas.

3.12 TRAINING

A. Provide training for a designated staff of Owner's representatives. Training shall be provided via self-paced training, web-based or computer-based training, classroom training, or a combination of training methods.

B. Training shall enable students to accomplish the following objectives.
1. Day-to-day Operators:
    a. Proficiently operate the system
    b. Understand control system architecture and configuration

c. Understand DDC system components
d. Understand system operation, including DDC system control and optimizing routines (algorithms)
e. Operate the workstation and peripherals
f. Log on and off the system
g. Access graphics, point reports, and logs
h. Adjust and change system set points, time schedules, and holiday schedules
i. Recognize malfunctions of the system by observation of the printed copy and graphical visual signals
j. Understand system drawings and Operation and Maintenance manual
k. Understand the job layout and location of control components
l. Access data from DDC controllers and ASCs
m. Operate portable operator's terminals
n. Perform DDC controller unit operation and maintenance procedures
o. Perform workstation and peripheral operation and maintenance procedures
p. Perform DDC system diagnostic procedures
q. Configure hardware including PC boards, switches, communication, and I/O points
r. Maintain, calibrate, troubleshoot, diagnose, and repair hardware
s. Adjust, calibrate, and replace system components

3.13 SEQUENCES OF OPERATION

A. Refer to Mechanical sheets for Sequence of Operations.

3.14 START-UP AND CHECKOUT PROCEDURES

A. Start up, check out, and test all hardware and software and verify communication between all components.
   1. Verify that all control wiring is properly connected and free of all shorts and ground faults. Verify that terminations are tight.
   2. Verify that all analog and binary input/output points read properly.
   3. Verify alarms and interlocks.
   4. Verify operation of the integrated system

END OF SECTION 239000

CJD Engineering LLC 2225 W. Chesterfield Blvd., Suite. 200 Springfield, MO 65807 (417) 877-1700 Fax: (417) 324-7735

SECTION 239300 – MECHANICAL SYSTEMS COMMISSIONING

PART 1 - GENERAL

1.1 General Contractor shall contract with Commissing Agent (CA). Mechanical Contractor shall not include Commissioning Agent work in bid. The CA has overall responsibility for planning and coordinating the commissioing process. Mechanical Contractor shall still be required to work with all parties including Plumbing Contractor, Testing and Balancing (TAB) Contractor, Temperature Controls Contractor and Commissioning Agent until total Commissioning work is deemed satisfactory to all parties.

1.2 CONTRACTORS' RESPONSIBILITIES

A. The mechanical division contractor's responsibilities are defined in Section 019113 of the specifications. These responsibilities apply to all specialty sub-contractors and major equipment suppliers within this division. Each contractor and supplier shall review Section 019113 and their bids shall include for carrying out the work described, as it applies to each Section within this division's specifications, individually and collectively. Contractor shall work with Testing, Adjusting and Balancing contractor to adjust air/water/controls systems after initial installation to achieve air/water flows as indicated on the plans and schedules.

END OF SECTION 239300

CJD Engineering LLC 2225 W. Chesterfield Blvd., Suite. 200 Springfield, MO 65807 (417) 877-1700 Fax: (417) 324-7735

SECTION 239500 - TESTING, ADJUSTING, AND BALANCING

PART 1 - GENERAL

1.1 RELATED DOCUMENTS

A. Drawings and general provisions of the Contract, including General and Supplementary Conditions, Division 01 Specification Sections, section 230100 - General HVAC Requirements, section 230500 – Basic Mechanical Materials and Methods shall apply to this Section.

1.2 SUMMARY

A. Testing and Balancing (TAB) Firm
   1. The TAB firm has overall responsibility for planning and coordinating the testing and balancing process. However, TAB and commissioning involves all parties to the design and construction process, including the mechanical contractor, and all specialty sub-contractors within the mechanical sections such as sheet metal, piping, refrigeration, water treatment, and controls, plus major equipment suppliers as required.

B. CONTRACTORS' RESPONSIBILITIES
   1. The contractor's responsibilities are defined in the sections below. These responsibilities apply to all specialty sub-contractors and major equipment suppliers within this division. Each contractor and supplier shall review this section and their bids shall include for carrying out the work described, as it applies to each Section within this division's specifications, individually and collectively.

C. Air Systems:
   1. Constant-volume air systems.
   2. Variable-air-volume systems.

D. Plumbing Piping Systems:
   1. Domestic hot water recirculation system systems.

E. HVAC equipment quantitative-performance settings.

F. Verifying that automatic control devices are functioning properly.

G. Reporting results of activities and procedures specified in this Section.

1.3 SUBMITTALS

A. Qualification Data: Within 30 days from Contractor's Notice to Proceed, submit 4 copies of evidence that TAB firm and this Project's TAB team members meet the qualifications specified in "Quality Assurance" Article.

B. The following balancing contractors will be accepted for this project. No other contractors shall be allowed unless approved by engineer prior to bid.

   1. CJD Engineering.
   2. Systems Testing and Analysis.
   3. Testing & Balancing Company of the Ozarks.

C. Certified TAB Reports: Submit two copies of reports prepared, as specified in this Section, on approved forms certified by TAB firm.

D. Warranties specified in this Section.

1.4 QUALITY ASSURANCE

A. TAB Firm Qualifications: Engage a TAB firm certified by either AABC or NEBB.

B. Certification of TAB Reports: Certify TAB field data reports. This certification includes the following:
1. Review field data reports to validate accuracy of data and to prepare certified TAB reports.
2. Certify that TAB team complied with approved TAB plan and the procedures specified and referenced in this Specification.

C. TAB Report Forms: Use standard forms from AABC's "National Standards for Testing and Balancing Heating, Ventilating, and Air Conditioning Systems or NEBB's "Procedural Standards for Testing, Adjusting, and Balancing of Environmental Systems."

D. Instrumentation Type, Quantity, and Accuracy: As described in AABC's "National Standards for Testing and Balancing Heating, Ventilating, and Air Conditioning Systems or NEBB's "Procedural Standards for Testing, Adjusting, and Balancing of Environmental Systems," Section II, "Required Instrumentation for NEBB Certification."

E. Instrumentation Calibration: Calibrate instruments at least every six months or more frequently if required by instrument manufacturer.
1. Keep an updated record of instrument calibration that indicates date of calibration and the name of party performing instrument calibration.

1.5 COORDINATION

A. Coordinate the efforts of factory-authorized service representatives for systems and equipment, HVAC controls installers, and other mechanics to operate HVAC systems and equipment to support and assist TAB activities.

B. Perform TAB after leakage and pressure tests on air and water distribution systems have been satisfactorily completed.

1.6 WARRANTY

A. National Project Performance Guarantee: Provide a guarantee on AABC's or NEBB forms stating that AABC will assist in completing requirements of the Contract Documents if TAB firm fails to comply with the Contract Documents. Guarantee includes the following provisions:
1. The certified TAB firm has tested and balanced systems according to the Contract Documents.
2. Systems are balanced to optimum performance capabilities within design and installation limits.

PART 2 - PRODUCTS (Not Applicable)

PART 3 - EXECUTION

3.1 EXAMINATION

A. Examine the Contract Documents to become familiar with Project requirements and to discover conditions in systems' designs that may preclude proper TAB of systems and equipment.

CJD Engineering LLC 2225 W. Chesterfield Blvd., Suite. 200 Springfield, MO 65807 (417) 877-1700 Fax: (417) 324-7735

1. Contract Documents are defined in the General and Supplementary Conditions of Contract.
2. Verify that balancing devices, such as test ports, gage cocks, thermometer wells, flow-control devices, balancing valves and fittings, and manual volume dampers, are required by the Contract Documents. Verify that quantities and locations of these balancing devices are accessible and appropriate for effective balancing and for efficient system and equipment operation.

B. Examine approved submittal data of HVAC systems and equipment.

C. Examine equipment performance data including fan and pump curves. Relate performance data to Project conditions and requirements, including system effects that can create undesired or unpredicted conditions that cause reduced capacities in all or part of a system. Calculate system effect factors to reduce performance ratings of HVAC equipment when installed under conditions different from those presented when the equipment was performance tested at the factory. To calculate system effects for air systems, use tables and charts found in AMCA 201, "Fans and Systems," Sections 7 through 10; or in SMACNA's "HVAC Systems--Duct Design," Sections 5 and 6. Compare this data with the design data and installed conditions.

D. Examine system and equipment installations to verify that they are complete and that testing, cleaning, adjusting, and commissioning specified in individual Sections have been performed.

E. Examine HVAC system and equipment installations to verify that indicated balancing devices, such as test ports, gage cocks, thermometer wells, flow-control devices, balancing valves and fittings, and manual volume dampers, are properly installed, and that their locations are accessible and appropriate for effective balancing and for efficient system and equipment operation.

F. Examine systems for functional deficiencies that cannot be corrected by adjusting and balancing.

G. Examine HVAC equipment to ensure that clean filters have been installed, bearings are greased, belts are aligned and tight, and equipment with functioning controls is ready for operation.

H. Examine terminal units, such as variable-air-volume boxes, to verify that they are accessible and their controls are connected and functioning.

I. Examine plenum ceilings used for supply air to verify that they are airtight. Verify that pipe penetrations and other holes are sealed.

J. Examine heat-transfer coils for correct piping connections and for clean and straight fins.

K. Examine system pumps to ensure absence of entrained air in the suction piping.

L. Examine equipment for installation and for properly operating safety interlocks and controls.

M. Examine automatic temperature system components to verify the following:
1. Dampers, valves, and other controlled devices are operated by the intended controller.
2. Dampers and valves are in the position indicated by the controller.
3. Integrity of valves and dampers for free and full operation and for tightness of fully closed and fully open positions. This includes dampers in multizone units, mixing boxes, and variable-air-volume terminals.
4. Automatic modulating and shutoff valves, including two-way valves and three-way mixing and diverting valves, are properly connected.
5. Thermostats and humidistats are located to avoid adverse effects of sunlight, drafts, and cold walls.

CJD Engineering LLC 2225 W. Chesterfield Blvd., Suite. 200 Springfield, MO 65807 (417) 877-1700 Fax: (417) 324-7735

6. Sensors are located to sense only the intended conditions.
7. Sequence of operation for control modes is according to the Contract Documents.
8. Controller set points are set at indicated values.
9. Interlocked systems are operating.
10. Changeover from heating to cooling mode occurs according to indicated values.

N. Report deficiencies discovered before and during performance of TAB procedures. Observe and record system reactions to changes in conditions. Record default set points if different from indicated values.

3.2 PREPARATION

A. Complete system readiness checks and prepare system readiness reports. Verify the following:
1. Permanent electrical power wiring is complete.
2. Plumbing systems are filled, clean, and free of air.
3. Automatic temperature-control systems are operational.
4. Equipment and duct access doors are securely closed.
5. Balance, smoke, and fire dampers are open.
6. Isolating and balancing valves are open and control valves are operational.
7. Ceilings are installed in critical areas where air-pattern adjustments are required and access to balancing devices is provided.
8. Windows and doors can be closed so indicated conditions for system operations can be met.

3.3 GENERAL PROCEDURES FOR TESTING AND BALANCING

A. Perform testing and balancing procedures on each system according to the procedures contained in AABC's "National Standards for Testing and Balancing Heating, Ventilating, and Air Conditioning Systems" or NEBB's "Procedural Standards for Testing, Adjusting, and Balancing of Environmental Systems" and this Section.

B. Cut insulation, ducts, pipes, and equipment cabinets for installation of test probes to the minimum extent necessary to allow adequate performance of procedures. After testing and balancing, close probe holes and patch insulation with new materials identical to those removed. Restore vapor barrier and finish according to insulation Specifications for this Project.

C. Mark equipment and balancing device settings with paint or other suitable, permanent identification material, including damper-control positions, valve position indicators, fan-speed-control levers, and similar controls and devices, to show final settings.

D. Take and report testing and balancing measurements in inch-pound IP units.

3.4 GENERAL PROCEDURES FOR BALANCING AIR SYSTEMS

A. Prepare test reports for both fans and outlets. Obtain manufacturer's outlet factors and recommended testing procedures. Crosscheck the summation of required outlet volumes with required fan volumes.

B. Prepare schematic diagrams of systems' "as-built" duct layouts.

C. Determine the best locations in main and branch ducts for accurate duct airflow measurements.

D. Check airflow patterns from the outside-air louvers and dampers and the return- and exhaust-air dampers, through the supply-fan discharge and mixing dampers.

E. Verify that motor starters are equipped with properly sized thermal protection.

F. Check dampers for proper position to achieve desired airflow path.

G. Check for airflow blockages.

H. Check condensate drains for proper connections and functioning.

I. Check for proper sealing of air-handling unit components.

J. Check for proper sealing of air duct system.

3.5 PROCEDURES FOR CONSTANT-VOLUME AIR SYSTEMS

A. Adjust fans to deliver total indicated airflows within the maximum allowable fan speed listed by fan manufacturer.
   1. Measure fan static pressures to determine actual static pressure as follows:
      a. Measure outlet static pressure as far downstream from the fan as practicable and upstream from restrictions in ducts such as elbows and transitions.
      b. Measure static pressure directly at the fan outlet or through the flexible connection.
      c. Measure inlet static pressure of single-inlet fans in the inlet duct as near the fan as possible, upstream from flexible connection and downstream from duct restrictions.
      d. Measure inlet static pressure of double-inlet fans through the wall of the plenum that houses the fan.
   2. Measure static pressure across each component that makes up an air-handling unit, rooftop unit, and other air-handling and -treating equipment.
      a. Simulate dirty filter operation and record the point at which maintenance personnel must change filters.
   3. Measure static pressures entering and leaving other devices such as sound traps, heat recovery equipment, and air washers, under final balanced conditions.
   4. Compare design data with installed conditions to determine variations in design static pressures versus actual static pressures. Compare actual system effect factors with calculated system effect factors to identify where variations occur. Recommend corrective action to align design and actual conditions.
   5. Obtain approval from Architect for adjustment of fan speed higher or lower than indicated speed. Make required adjustments to pulley sizes, motor sizes, and electrical connections to accommodate fan-speed changes.
   6. Do not make fan-speed adjustments that result in motor overload. Consult equipment manufacturers about fan-speed safety factors. Modulate dampers and measure fan-motor amperage to ensure that no overload will occur. Measure amperage in full cooling, full heating, economizer, and any other operating modes to determine the maximum required brake horsepower.

B. Adjust volume dampers for main duct, submain ducts, and major branch ducts to indicated airflows within specified tolerances.
   1. Measure static pressure at a point downstream from the balancing damper and adjust volume dampers until the proper static pressure is achieved.
      a. Where sufficient space in submain and branch ducts is unavailable for Pitot-tube traverse measurements, measure airflow at terminal outlets and inlets and calculate the total airflow for that zone.

CJD Engineering LLC 2225 W. Chesterfield Blvd., Suite. 200 Springfield, MO 65807 (417) 877-1700 Fax: (417) 324-7735

2. Remeasure each submain and branch duct after all have been adjusted. Continue to adjust submain and branch ducts to indicated airflows within specified tolerances.

C. Measure terminal outlets and inlets without making adjustments.
1. Measure terminal outlets using a direct-reading hood or outlet manufacturer's written instructions and calculating factors.

D. Adjust terminal outlets and inlets for each space to indicated airflows within specified tolerances of indicated values. Make adjustments using volume dampers rather than extractors and the dampers at air terminals.
1. Adjust each outlet in same room or space to within specified tolerances of indicated quantities without generating noise levels above the limitations prescribed by the Contract Documents.
2. Adjust patterns of adjustable outlets for proper distribution without drafts.

3.6 PROCEDURES FOR VARIABLE-AIR-VOLUME SYSTEMS

A. Compensating for Diversity: When the total airflow of all terminal units is more than the indicated airflow of the fan, place a selected number of terminal units at a maximum set-point airflow condition until the total airflow of the terminal units equals the indicated airflow of the fan. Select the reduced airflow terminal units so they are distributed evenly among the branch ducts.

B. Pressure-Independent, Variable-Air-Volume Systems: After the fan systems have been adjusted, adjust the variable-air-volume systems as follows:
1. Set outside-air dampers at minimum, and return- and exhaust-air dampers at a position that simulates full-cooling load.
2. Select the terminal unit that is most critical to the supply-fan airflow and static pressure. Measure static pressure. Adjust system static pressure so the entering static pressure for the critical terminal unit is not less than the sum of terminal-unit manufacturer's recommended minimum inlet static pressure plus the static pressure needed to overcome terminal-unit discharge system losses.
3. Measure total system airflow. Adjust to within indicated airflow.
4. Set terminal units at maximum airflow and adjust controller or regulator to deliver the designed maximum airflow. Use terminal-unit manufacturer's written instructions to make this adjustment. When total airflow is correct, balance the air outlets downstream from terminal units as described for constant-volume air systems.
5. Set terminal units at minimum airflow and adjust controller or regulator to deliver the designed minimum airflow. Check air outlets for a proportional reduction in airflow as described for constant-volume air systems.
   a. If air outlets are out of balance at minimum airflow, report the condition but leave outlets balanced for maximum airflow.
6. Remeasure the return airflow to the fan while operating at maximum return airflow and minimum outside airflow. Adjust the fan and balance the return-air ducts and inlets as described for constant-volume air systems.
7. Measure static pressure at the most critical terminal unit and adjust the static-pressure controller at the main supply-air sensing station to ensure that adequate static pressure is maintained at the most critical unit.
8. Record the final fan performance data.

3.7 GENERAL PROCEDURES FOR PLUMBING SYSTEMS

CJD Engineering LLC 2225 W. Chesterfield Blvd., Suite. 200 Springfield, MO 65807 (417) 877-1700 Fax: (417) 324-7735

A. Prepare test reports with pertinent design data and number in sequence starting at pump to end of system. Check the sum of branch-circuit flows against approved pump flow rate. Correct variations that exceed plus or minus 5 percent.

B. Prepare plumbing systems for testing and balancing according to the following, in addition to the general preparation procedures specified above:
   1. Open all manual and balancing valves for maximum flow.
   2. Check pump-motor load. If motor is overloaded, throttle main flow-balancing device so motor nameplate rating is not exceeded.

3.8 PROCEDURES FOR PLUMBING SYSTEMS

A. Measure water flow at pumps. Use the following procedures, except for positive-displacement pumps:
   1. Verify impeller size by operating the pump with the discharge valve closed. Read pressure differential across the pump. Convert pressure to head and correct for differences in gage heights. Note the point on manufacturer's pump curve at zero flow and verify that the pump has the intended impeller size.
   2. Check system resistance. With all valves open, read pressure differential across the pump and mark pump manufacturer's head-capacity curve. Adjust pump discharge valve until indicated water flow is achieved.
   3. Verify pump-motor brake horsepower. Calculate the intended brake horsepower for the system based on pump manufacturer's performance data. Compare calculated brake horsepower with nameplate data on the pump motor. Report conditions where actual amperage exceeds motor nameplate amperage.
   4. Report flow rates that are not within plus or minus 5 percent of design.

B. Measure flow at all manual balancing valves and adjust, where necessary, to obtain first balance.

C. Measure flow at main balancing station and set main balancing device to achieve flow that is 5 percent greater than indicated flow.

D. Adjust manual balancing stations to within specified tolerances of indicated flow rate as follows:
   1. Determine the balancing station with the highest percentage over indicated flow.
   2. Adjust each station in turn, beginning with the station with the highest percentage over indicated flow and proceeding to the station with the lowest percentage over indicated flow.
   3. Record settings and mark balancing devices.

E. Measure pump flow rate and make final measurements of pump amperage, voltage, rpm, pump heads, and systems' pressures and temperatures including outdoor-air temperature.

3.9 PROCEDURES FOR MOTORS

A. Motors, 1/2 HP and Larger: Test at final balanced conditions and record the following data:
   1. Manufacturer, model, and serial numbers.
   2. Motor horsepower rating.
   3. Motor rpm.
   4. Efficiency rating.
   5. Nameplate and measured voltage, each phase.
   6. Nameplate and measured amperage, each phase.
   7. Starter thermal-protection-element rating.

B. Motors Driven by Variable-Frequency Controllers: Test for proper operation at speeds varying from minimum to maximum. Test the manual bypass for the controller to prove proper operation. Record observations, including controller manufacturer, model and serial numbers, and nameplate data.

3.10 PROCEDURES FOR CONDENSING UNITS

A. Verify proper rotation of fans.
B. Measure entering- and leaving-air temperatures.
C. =Record compressor data.

3.11 PROCEDURES FOR HEAT-TRANSFER COILS

A. Electric-Heating Coils: Measure the following data for each coil:
   1. Nameplate data.
   2. Airflow.
   3. Entering- and leaving-air temperature at full load.
   4. Voltage and amperage input of each phase at full load and at each incremental stage.
   5. Calculated kilowatt at full load.
   6. Fuse or circuit-breaker rating for overload protection.

B. Refrigerant Coils: Measure the following data for each coil:
   1. Dry-bulb temperature of entering and leaving air.
   2. Wet-bulb temperature of entering and leaving air.
   3. Airflow.
   4. Air pressure drop.
   5. Refrigerant suction pressure and temperature.

3.12 TEMPERATURE-CONTROL VERIFICATION

A. Verify that controllers are calibrated and commissioned.
B. Check transmitter and controller locations and note conditions that would adversely affect control functions.
C. Record controller settings and note variances between set points and actual measurements.
D. Check the operation of limiting controllers (i.e., high- and low-temperature controllers).
E. Check free travel and proper operation of control devices such as damper and valve operators.
F. Check the sequence of operation of control devices. Note air pressures and device positions and correlate with airflow and water flow measurements. Note the speed of response to input changes.
G. Check the interaction of electrically operated switch transducers.
H. Check the interaction of interlock and lockout systems.
I. Check main control supply-air pressure and observe compressor and dryer operations.
J. Record voltages of power supply and controller output. Determine whether the system operates on a grounded or nongrounded power supply.
K. Note operation of electric actuators using spring return for proper fail-safe operations.

3.13 TOLERANCES

A. Set HVAC & Plumbing system airflow and water flow rates within the following tolerances:
   1. Supply, Return, and Exhaust Fans and Equipment with Fans: Plus 5 to plus 10 percent.
   2. Air Outlets and Inlets: 0 to minus 10 percent.
   3. Plumbing-Water Flow Rate: 0 to minus 10 percent.

3.14 REPORTING

CJD Engineering LLC 2225 W. Chesterfield Blvd., Suite. 200 Springfield, MO 65807 (417) 877-1700 Fax: (417) 324-7735

A. Initial Construction-Phase Report: Based on examination of the Contract Documents as specified in "Examination" Article, prepare a report on the adequacy of design for systems' balancing devices. Recommend changes and additions to systems' balancing devices to facilitate proper performance measuring and balancing. Recommend changes and additions to HVAC systems and general construction to allow access for performance measuring and balancing devices.

3.15 FINAL REPORT

A. General: Typewritten, or computer printout in letter-quality font, on standard bond paper, in three-ring binder, tabulated and divided into sections by tested and balanced systems.

B. Include a certification sheet in front of binder signed and sealed by the certified testing and balancing engineer.
   1. Include a list of instruments used for procedures, along with proof of calibration.

C. Final Report Contents: In addition to certified field report data, include the following:
   1. Pump curves.
   2. Fan curves.
   3. Manufacturers' test data.
   4. Field test reports prepared by system and equipment installers.
   5. Other information relative to equipment performance, but do not include Shop Drawings and Product Data.

D. General Report Data: In addition to form titles and entries, include the following data in the final report, as applicable:
   1. Title page.
   2. Name and address of TAB firm.
   3. Project name.
   4. Project location.
   5. Architect's name and address.
   6. Engineer's name and address.
   7. Contractor's name and address.
   8. Report date.
   9. Signature of TAB firm who certifies the report.
   10. Table of Contents with the total number of pages defined for each section of the report. Number each page in the report.
   11. Summary of contents including the following:
      a. Indicated versus final performance.
      b. Notable characteristics of systems.
      c. Description of system operation sequence if it varies from the Contract Documents.
   12. Nomenclature sheets for each item of equipment.
   13. Data for terminal units, including manufacturer, type size, and fittings.
   14. Notes to explain why certain final data in the body of reports varies from indicated values.
   15. Test conditions for fans and pump performance forms including the following:
      a. Settings for outside-, return-, and exhaust-air dampers.
      b. Conditions of filters.
      c. Cooling coil, wet- and dry-bulb conditions.
      d. Face and bypass damper settings at coils.
      e. Fan drive settings including settings and percentage of maximum pitch diameter.
      f. Inlet vane settings for variable-air-volume systems.
      g. Settings for supply-air, static-pressure controller.

CJD Engineering LLC 2225 W. Chesterfield Blvd., Suite. 200 Springfield, MO 65807 (417) 877-1700 Fax: (417) 324-7735

h. Other system operating conditions that affect performance.

E. System Diagrams:
F. Air-Handling Unit Test Reports:
G. Apparatus-Coil Test Reports:
H. Fan Test Reports:
I. Round, Flat-Oval, and Rectangular Duct Traverse Reports:
J. Air-Terminal-Device Reports:
K. Compressor and Condenser Reports:

L. Pump Test Reports:
M. Instrument Calibration Reports:

END OF SECTION 239500

CJD Engineering LLC 2225 W. Chesterfield Blvd., Suite. 200 Springfield, MO 65807 (417) 877-1700 Fax: (417) 324-7735

SECTION 260100 - GENERAL ELECTRICAL REQUIREMENTS

PART 1 - GENERAL

1.1 RELATED DOCUMENTS

A. Drawings and general provisions of the Contract, including General and Supplementary Conditions and Division 1 Specification Sections shall apply to this Section.

1.2 SPECIFICATION FORM AND DEFINITIONS:

A. These Specifications are abbreviated form and contain incomplete sentences. Omissions of words or phrases such as "the Contractor shall", "shall be", "as noted on the drawings", "according to the drawings', "a", "an", "the" and "all" are intentional. Omitted words and phrases shall be supplied by inference.

B. When a word such as "proper", "satisfactory", 'equivalent", and "as directed" is used, it requires Engineer's review.

C. "Provide" means furnish and install.

D. "Working Day" wherever used in these specifications shall mean the normal working days, Monday through Friday, exclusive of Saturday, Sunday and federally observed holidays.

E. Architect-Engineer hereinafter abbreviated A/E shall mean both the Design Architects and Design Engineers.

F. Design Engineer, hereinafter abbreviated D/E shall mean the Engineering firm, CJD Engineering LLC, 2225 West Chesterfield Boulevard, Suite 200, Springfield, Missouri 65807, Telephone (417) 877-1700. Contact person: Allen Davis, adavis@cjd-eng.com

G. Electrical Contractor, hereinafter abbreviated E/C shall mean the person or company and their subcontractors who enter into contract with the Owner to perform the electrical division work.

H. Mechanical Contractor, hereinafter abbreviated M/C shall mean the person or company and their subcontractors who enter into contract with the Owner to perform the mechanical division work.

I. General Contractor, hereinafter abbreviated G/C shall mean the person or company and their subcontractors who enter into contract with the Owner to perform the general division work.

J. Equipment and/or materials manufacturer hereinafter abbreviated E/M shall mean the manufacturer of equipment or materials specified or referred to.

1.3 GENERAL EXTENT OF WORK:

A. Provide electrical systems indicated on drawings, specified or reasonably implied. Provide every device and accessory necessary for proper operation and completion of electrical systems. In no case will claims for "Extra Work" be allowed for work about which E/C could have informed himself before bids were taken.

B. E/C shall familiarize himself with equipment provided by other Contractors which require electrical connections and controls.

C. Make required electrical connections to equipment provided under Architectural and Mechanical divisions of this project, except where shown or specified otherwise. All temperature control electrical wiring and connections shall be by Electrical Contractor. Make required internal field wiring modifications indicated on wiring diagrams of factory installed control systems for control sequence specified. These field modifications shall be limited to jumper connections and connection of internal wiring to alternate terminal block lugs. Cost for field modifications requiring re-wiring of factory installed control systems for equipment provided by G/C or M/C shall be included in base bid of each respective contractor.

D. Check electrical data and wiring diagrams received from M/C for compliance with project voltages, wiring, controls and protective devices shown on electrical drawings. Promptly bring discrepancies found to attention of A/E for a decision.

E. Provide safety disconnect switches, contactors, and manual and magnetic motor starters for mechanical and electrical equipment requiring such devices. Omit these devices where included as part of factory installed prewired control systems provided with mechanical equipment. With exception of factory installed devices, provide safety disconnect switches, contactors and motor starters by one manufacturer to allow maximum interchangeability of repair parts and accessories for these devices.

F. To maximum extent possible electrical controls in boiler rooms, equipment rooms, and control rooms shall be grouped in accessible locations and arranged according to function. Where possible use group control panels and combination starters in lieu of individually enclosed devices.

1.4 LOCAL CONDITIONS:

A. Visit site and determine existing local conditions affecting work in contract.

B. Failure to determine site conditions or nature of existing or new construction will not be considered basis for granting additional compensation.

1.5 CODES, ORDINANCES, RULES AND REGULATIONS:

A. Provide work in accordance with applicable rules, codes, ordinances and regulations of Local, State, and Federal Governments, and other authorities having lawful jurisdiction.

B. Conform to latest editions and supplements of following codes, standards or recommended practices.

1. Safety Codes
   a. National Electric Safety Code Handbook H30 - National Bureau of Standards.
   b. Occupational Safety and Health Standards - Department of Labor.
   c. Specifications for Making Buildings and Facilities Accessible To, and Usable By, the Physically Handicapped - American National Standards Institute ANSI A117.1.

2. National Fire Codes:
   a. NFPA No. 70 - National Electric Code, version and amendments as adopted by AHJ.
   b. NFPA No. 76A - Essential Electric Systems.
   c. NFPA No. 101 - Life Safety Code.

3. Underwriters Laboratories Inc.:

a. UL-508 - Standards for Industrial Control Equipment.
b. UL-1008- Standard for Automatic Transfer Switches.

1.6 All materials, equipment and component parts of equipment shall bear UL labels whenever such devices are listed by UL.

A. Drawings and specifications indicate minimum construction standard, should any work indicated be sub-standard to any ordinances, laws, codes, rules or regulations bearing on work, E/C shall promptly notify A/E in writing before proceeding with work so that necessary changes can be made. However, if E/C proceeds with work knowing it to be contrary to any ordinances, laws, rules, and regulations, he shall thereby have assumed full responsibility for and shall bear all costs required to correct non-complying work.

B. E/C shall secure and pay for necessary permits and certificates of inspection required by governmental ordinances, laws, rules or regulations. Keep a written record of all permits and inspection certificates and submit two copies to A/E with request for final inspection.

1.7 CONTRACT CHANGES:

A. Changes or deviations from contract, including those for extra or additional work must be submitted in writing for review of A/E. No verbal orders will be recognized.

B. Changes in the work shall be submitted in accordance with AIA Document A201. General Conditions of the Contract for Construction.

C. All change proposals shall be itemized indicating separately the costs for materials, labor, restocking charges, freight, bonds, insurance, overhead and profit. All materials shall be listed separately with quantities and individual unit prices. Labor factors shall be from a nationally recognized source with appropriate adjustments.

1.8 LOCATIONS AND INTERFERENCES:

A. Locations of equipment, conduit and other electrical work is indicated diagrammatically by electrical drawings. Layout work from dimensions on Architectural and Structural Drawings. Verify equipment size from manufacturers shop drawings.

B. Study and become familiar with contract drawings of other trades and in particular general construction drawings and details to obtain necessary information for figuring installation. Cooperate with other workmen and install work to avoid interference with their work. Minor deviations, not affecting design characteristics, performance or space limitation may be permitted if reviewed by A/E prior to installation.

C. Any conduit, apparatus, appliance or other electrical item interfering with proper placement of other work as indicated on drawings, specified, or required, shall be removed and if so shown relocated and reconnected without extra cost. Damage to other work caused by E/C, his Sub- Contractor, his workmen or by any cause whatsoever, shall be restored as specified for new work.

1.9 SYSTEMS PERFORMANCE:

A. Final acceptance of work shall be subject to the condition that all systems, equipment, apparatus and appliance operate satisfactorily as designed and intended. Work shall include required adjustment of systems and control equipment installed under this specification division.

1.10 WARRANTY:

A. E/C warrants to Owner and Architect the quality of materials, equipment, workmanship and operation of equipment provided under this specification division for a period of one year from and after date of substantial completion of building and acceptance of electrical systems by Owner.

B. Where manufacturers' warranties expire during the one year warranty period, E/C shall include provisions for extending warranty for the full one year period and shall include cost for warranty extension in his base bid. Where warranty extensions are not available from manufacturer, supplier or installer, M/C shall provide labor, parts and material warranty services equal to the requirements of these specifications and the terms of the manufacturer, supplier and installer warranties.

C. E/C warrants to Owner and Architect that on receipt of written notice from either of them within one year warranty period following date of acceptance all defects that have appeared in materials and/or workmanship, shall be promptly corrected to condition required by contract documents at E/C's expense.

D. The above warranty shall not supersede any separately stated warranty or other requirements required by law or by these specifications.

E. Keep an itemized list of all equipment warranties listing equipment by name, mark, and type along with length and expiration date of each warranty. Submit two copies to A/E with request for final inspection.

F. If the Architect’s specification includes a warranty that exceeds the above warranty requirements the Architect’s warranty shall take precedence.

1.11 MATERIALS EQUIPMENT AND SUBSTITUTIONS:

A. The intent of these specifications is to allow ample opportunity for E/C to use his ingenuity and abilities to perform the work to his and Owner's best advantage, and to permit maximum competition in bidding on standards of materials and equipment required.

B. Material and equipment installed under this contract shall be first class quality, new, unused and without damage.

C. In general these specifications identify required materials and equipment by naming first the manufacturer whose product was used as the basis for the project design and specifications. The manufacturers product, series, model, catalog and/or identification numbers shall set quality and capacity requirements for comparing the equivalency of other manufacturer's products. Where other manufacturers names are listed they are considered an approved manufacturer for the product specified, however; the listing of their names implies no prior approval of any product unless specific model or catalog numbers are listed in these specifications or in subsequent addenda. Where other than first named products are used for E/C base bid proposal it shall be his responsibility to determine prior to bid time that his proposed materials and equipment selections are products of approved manufacturers which meet or exceed the specifications and are acceptable to the D/E.

D. Where materials or equipment are described but not named, provide required items of first quality, adequate in every respect for intended use. Such items shall be submitted to A/E for review prior to procurement.

CJD Engineering LLC 2225 W. Chesterfield Blvd., Suite. 200 Springfield, MO 65807 (417) 877-1700 Fax: (417) 324-7735

E. Prior to receipt of bids, if M/C wishes to incorporate products other than those named in Specifications in his bid, he shall submit a written request for review of substitutions to D/E not less than seven working days prior to bid date. D/E will review requests and acceptable items will be listed in an addendum issued to principal bidders.

F. Materials and equipment proposed for substitution shall be equal to or superior to that specified in construction, efficiency, utility, aesthetic design, and color as determined by A/E whose decision shall be final and without further recourse. Physical size of substitute brand shall be no larger than space provided including allowances for access for installation and maintenance. Requests must be accompanied by two copies of complete descriptive and technical data including E/M's name, model and catalog number, photographs or cuts, physical dimensions, operating characteristics and any other information needed for comparison.

G. In proposing a substitution prior to or subsequent to receipt of bids, include in such proposal cost of altering other elements of Project, including adjustments in mechanical/electrical service requirements necessary to accommodate such substitution; whether such affected elements be under this contract or under separate contracts.

H. Within 7 working days after bids are received, apparent low bidder shall submit to A/E for approval three copies of a list of all major items of equipment he intends to provide. As soon as practicable and within 30 working days after award of Contract, E/C shall submit shop drawings for equipment and materials to be incorporated in work for A/E's review. Where 30 working day limit is insufficient for preparation of detailed shop drawings on major equipment or assemblies, E/C shall submit manufacturer's descriptive catalog data and indicate date such detailed shop drawings will be submitted along with manufacturer's certification that order was placed within 30 working day limit.

I. After execution of Contract, substitution of product brands for those named in Specifications will be considered, only if:

J. Request is received within thirty days after Contract date and request includes statement showing credit due Owner, if any, if substitution product is used, or

K. Owner requests consideration be given to substitute brands.

1.12 SHOP DRAWINGS, OPERATING AND MAINTENANCE INSTRUCTIONS:

A. E/C shall furnish a minimum eight sets of shop drawings of all materials and equipment. A/E will retain four sets.

B. Where catalog cuts are submitted for review, conspicuously mark or provide schedule of equipment, capacities, controls, fittings, sizes, etc. that are to be provided. Mark each submitted item with applicable section and paragraph numbers of these specifications, or plan sheet number when item does not appear in specifications. Where equipment submitted does not appear in base specifications or specified equivalent, submittals shall be marked with applicable alternate numbers, change order number or letters of authorization. Each submittal shall contain at least two sets of original catalog cuts. Each catalog sheet shall bear E/M's name and address. All shop drawings on materials and equipment listed by UL shall indicate UL approval on submittal.

C. E/C shall check all shop drawings to verify that they meet specifications and/or drawings requirements before forwarding submittals to the A/E for their review. All shop drawings submitted to A/E shall bear E/C approval stamp which shall indicate that E/C has reviewed submittals and that they meet specification and/or drawing requirements. E/C's submittal review shall specifically check for but not be

limited to the following: equipment capacities physical size in relation to space allowed; electrical characteristics, provisions for supply, return and drainage connections to building systems. All shop drawings not meeting E/C's approval shall be returned to his supplier for resubmittal.

D. No shop drawing submittals will be considered for review by the A/E without E/C's approval stamp, or that have extensive changes made on the original submittal as a result of E/C's review.

E. A/E will not be responsible for the cost of returning shop drawing submittals that are submitted to them without E/C's review and approval stamp. A letter will be sent to E/C by either the Architect or Engineer indicating receipt of an improper submittal, E/C shall acknowledge receipt of letter and indicate his plans for pick-up or resubmitting. A/E will hold improper submittals for pick-up by E/C or supplier for 15 working days after date of receipt. If not picked up by the 16th working day, submittals will be disposed of by A/E.

F. A/E's review of shop drawings will not relieve E/C of responsibility for deviations from drawings and specifications unless such deviations have been specifically approved in writing by Owner of his representative, nor shall it relieve E/C of responsibility for errors in shop drawings. No work shall be fabricated until the A/E's review has been obtained. Any time delay caused by correcting and resubmitting shop drawings will be E/C's responsibility.

G. Operating and Maintenance Instructions:

1. Submit with shop drawings of equipment, one set of operating and maintenance instructions and parts lists for all items of equipment provided. Instructions shall be prepared by E/M.

2. Keep in safe place, keys and wrenches furnished with equipment under this contract. Present to Owner and obtain receipt for same upon completion of project.

3. Prepare complete brochure covering electrical systems and equipment provided under this contract. Submit brochures to A/E for review before delivery to Owner. E/C at his option may prepare brochure or retain an individual to prepare it for him. Include cost of this service in base bid. Brochures shall contain following:

4. Certified equipment drawings and/or catalog data with equipment provided clearly marked as outlined under this specification.

5. One copy each of balance and test reports required and as outlined under this specification.

6. Complete operating and maintenance instructions for each item of equipment.

7. Special emergency operating instructions with a list of service organizations (including addresses and telephone numbers) capable of rendering emergency service to various parts of electrical system.

8. Provide brochures bound in Wilson Jones No. B3-367-49R or National No. 82-87-684 3" capacity red vinyl guarded three ring binder with metal hinge. Reinforce binding edge of each sheet of loose-leaf type brochure to prevent tearing from continued usage. Clearly print on front cover label of each brochure the following:

9. Project name and address.

10. Section of work covered by brochure, i.e. "Electrical".

1.13 RECORD DOCUMENTS:

A. Record Drawings: Maintain a reproducible set of contract drawings and shop drawings in clean, undamaged condition, with mark-up of actual installations which vary substantially from the work as originally shown. Mark whichever drawing is most capable of showing "field" condition fully and accurately; however, where shop drawings are used for mark-up, record a cross-reference at corresponding location on working drawings. Mark with red erasable red pencil and, where feasible, use other colors to distinguish between variations in separate categories of work. Mark-up new information which is recognized to be of importance to Owner, but was for some reason not shown on either contract drawings of shop drawings. Give particular attention to concealed work, which would be difficult to measure and record at a later date. Note related change-order numbers where applicable. Organize record drawing sheers into manageable sets, bind with durable paper cover sheets, and prints suitable titles, dates and other identification on cover of each sheet.

B. Record Specifications: Maintain one copy of specifications, including addenda, change orders, and similar modifications issued in printed form during construction, and mark-up variations (of substance) in actual work in comparison with text of specifications and modifications as issued. Give particular attention to substitutions, selection of option, and similar information on work where it is concealed or cannot otherwise by readily discerned at a later date by direct observation. Note related record drawing information and product data, where applicable. upon completion of mark-up submit to Architect/Engineer for Owner's records.

C. The contractor shall provide a full set of photographs showing the entire underground equipment. The photographs shall be taken prior to any concrete being poured. The underground equipment shall consist of, but not be limited to, the following:

Piping
Conduits
Ductwork

D. The contractor shall provide the photographs in an 8.5” x 11” format for record keeping purposes with the maintenance manuals. The photos shall all be digital and a disk or C.D. shall be provided to the Owner as a permanent record.

E. As-built documents shall be submitted for approval prior to final payment. Copies of “In-Progress” as-built drawings shall be submitted at each pay request.

PART 2 - PRODUCTS (NOT APPLICABLE)

PART 3 - EXECUTION (NOT APPLICABLE)

PART 4 - EXHIBITS

4.1 EXHIBIT A

A. SUBSTITUTION REQUEST FORM following the end of this section.

END OF SECTION 260100

EXHIBIT A - SUBSTITUTION REQUEST FORM

Return completed substitution request form with supporting data five (5) working days prior to bid date. Engineer reserves the right to refuse consideration of requested substitutions submitted less than five (5) working days prior to bid date. Substitution request will not be considered without supporting data.

Specification Section: _____ Page: _____ Paragraph _____

Drawing Detail No. / Sheet No. _____ Description: _____

Specified Manufacturer / Model No.: _____

Substitute Manufacturer / Model No.: _____

Attach supporting data including:

- A product description, specifications, drawings, photographs, samples, capacities at design conditions, reports, and test data adequate for evaluation of the request.
- A description of changes to the Contract Documents that the proposed substitution will require for its proper installation.
- Location of substitution manufacturer's nearest factory certified service office.

The Undersigned certifies:

- Proposed substitution has been fully investigated and determined to be equal or superior in all respects to specified product.
- Same warranty will be furnished for proposed substitution as for specified product.
- Same maintenance service and source of replacement parts, as applicable, is available.
- Proposed substitution will have no adverse effect on mechanical, plumbing, fire sprinkler, electrical, or other trades and will not affect or delay progress schedule.
- Proposed substitution does not affect dimensions and functional clearances.
- Payment will be made for changes to building design, including A/E design, detailing, and construction costs caused by the substitution, errors in attached supporting data, or insufficient supporting data for thorough review.

Substitution request submitted by: _____

Signed by: _____

Firm: _____

Address: _____

Telephone: _____ Fax: _____

Engineer's Review:

__ Substitution accepted
__ Substitution accepted as noted
__ Substitution rejected
__ Substitution request received too late

Remarks: _____

Acceptance of requested substitution does not relieve the proposed substitution from submittal/shop drawing review and does not constitute prior approval of proposed substituted materials or equipment.

Signed by: _____ Date: _____

CJD Engineering LLC 2225 W. Chesterfield Blvd., Suite. 200 Springfield, MO 65807 (417) 877-1700 Fax: (417) 324-7735

SECTION 260500 - BASIC ELECTRICAL MATERIALS AND METHODS

PART 1 - GENERAL

1.1 RELATED DOCUMENTS

A. Drawings and general provisions of the Contract, including General and Supplementary Conditions, Division 1 Specification Sections and section 260100 - General Electrical Requirements shall apply to this Section.

PART 2 - PRODUCTS (NOT APPLICABLE)

PART 3 - EXECUTION

3.1 CIRCUITING:

A. Follow circuiting shown on drawings for lighting, power and equipment connections.

3.2 CUTTING AND PATCHING:

A. Contractor shall do cutting and patching of building materials required for installation of work herein specified. Cut no structural members without Architect's approval and in a manner approved by him.

B. Patching shall be by mechanics of particular trade involved and shall meet approval of Architect.

C. Drilling and cutting of openings through building materials require Architect's review and approval. Make openings in concrete with concrete hole saw or concrete drill. Do not use star drill or air hammer for this work.

3.3 SLEEVES:

A. Provide proper type and size sleeves for electrical ducts, busses, conduits, etc. passing through building construction. Where sleeves are installed by Others, supervise installation to insure proper sleeve location. Unless indicated or approved, install no sleeves in structural members. Sleeves shall be installed in concrete or masonry walls or floors and where otherwise noted.

B. Each sleeve shall be continuous through wall floor or roof and shall be cut flush on each side except where indicated otherwise. Sleeves shall not be installed in structural member except where indicated or approved. Sleeves shall be required through floors subject to flooding such as toilet rooms, equipment rooms and kitchens. The contractor shall have the option of:

C. Providing a cast iron sleeve with integral flanges extending 1 inch above finished floor. Sleeve shall be cast in concrete when floor is poured. Annular space between sleeve and pipe shall be filled with Kawool.
or

D. Provide core-drilled opening in concrete with Thunderline Unk-Seal or Calpico Sealing Linx between piping and opening.

E. Sleeves passing through floors and exterior walls with waterproof membranes shall be core-drilled (floors only) and sealed with Thunderline Link-Seal or Calpico Sealing Linx.

CJD Engineering LLC 2225 W. Chesterfield Blvd., Suite. 200 Springfield, MO 65807 (417) 877-1700 Fax: (417) 324-7735

F. Where electrical ducts, busses, conduits, wiring, etc. passed through fire walls, floors, and smoke partitions seal annular space between sleeve and item passing thru with Kaowool Fire Master Bulk Packing. Packing thickness shall be sized per manufacturer's recommendation for maintaining the integrity of the fire wall/floor or smoke partition. Fire protection system shall be rated per ASTM E 119. Equivalents to Kaowool are 3M, Flame Stop, or Flame Safe.

G. Where piping passes through walls serving as supply or exhaust air plenums or chases, seal annular space between pipe and sleeve air tight with Thunderline Link-Seal or Calpico Sealing Linx.

3.4 MUTILATION:

A. Mutilation of building finishes, caused by installation of electrical equipment, fixtures, outlets and other electrical devices shall be repaired at E/C's expense to approval of Architect.

3.5 EXCAVATION AND BACKFILL:

A. Perform necessary excavating to receive work, provide necessary sheathing, shoring, cribbing, tarpaulins, etc. as required and remove same at completion of work. Perform excavation in accordance with appropriate section of these specifications, and in compliance with OSHA Safety Standards.

B. Excavate trenches of sufficient width to allow ample working space, and no deeper than necessary for installation of work.

C. Conduct excavations so no walls or footings are disturbed or injured. Backfill excavations made under or adjacent to footings with selected earth or sand and tamp to compaction required by A/E. Mechanically tamp backfill under concrete and paving in 6 inch layers to 95% standard density.

D. Backfill trenches and excavations to required heights with allowance made for settlement. Tamp fill material thoroughly and moistened as required for specified compaction density. Dispose of excess earth, rubble and debris as directed by Architect.

E. When available refer to test hole information on Architectural drawings or specifications for types of soil to be encountered in excavations. Where rock is indicated, list unit cost for rock excavation in base bid.

3.6 SETTING, ADJUSTMENT AND EQUIPMENT SUPPORTS:

A. Work shall include mounting, alignment and adjustment of systems and equipment. Set equipment level on adequate foundations and provide proper anchor bolts and isolation as shown or specified. Level, shim, and grout equipment bases as recommended by E/M. Mount motors, align and adjust drive shafts and belts according to E/M's instructions. Equipment failures resulting from improper installation or field alignment shall be repaired or replaced by E/C at no cost to Owner.

B. Provide concrete bases for all floor and slab mounted equipment. Refer to drawings for required base type and size. Provide 3 1/2" high base where base is not shown on drawings.

C. Provide each piece of equipment or apparatus suspended from ceiling or mounted above floor level with suitable structural support, platform or carrier in accordance with best recognized practice. E/C shall arrange for attachment to building structure, unless otherwise indicated on drawings or specified. Provide hangers with vibration eliminators where required. Contractor shall verify that structural members of building are adequate to support equipment. Submit details of hangers, platforms and supports together with total weights of mounted equipment to A/E for review before proceeding with fabrication or installation.

3.7 PAINTING OF MATERIALS AND EQUIPMENT:

A. Equipment and materials exposed to interior dry environment shall have a minimum of one primer and one finish coat. Equipment and materials mounted in exterior location shall have a minimum of one primer and two coat colors in finish areas shall be selected by A/E.

B. After installation, damage to painted surfaces shall be properly prepared and primed with primers equal to factory materials. Finish coating shall be same color and type as factory finish.

C. Where extensive refinishing of factory applied finishes are required equipment shall be completely repainted. A/E will make final determination on extent of refinishing required.

3.8 MAINTENANCE OF SYSTEMS:

A. E/C shall be responsible for operation, maintenance and lubrication of equipment installed under his contract through substantial completion.

3.9 PROTECTION AND CLEANING OF SYSTEMS AND EQUIPMENT:

A. It shall be E/C's responsibility to protect and prevent damage to all electrical materials and equipment stored and/or installed under this contract. All work, materials and equipment shall be adequately protected by any and all means necessary to prevent damage by weather, flooding, condensation, construction debris, fire, and construction equipment and vehicles.

B. Where job conditions, or work of other contractors produce the potential for damage to electrical systems and equipment, E/C shall immediately notify the G/C so that corrective action can be taken.

C. E/C shall take extra precautions to protect electrical equipment containing solid state electronics, open relays, and contacts from damage by water, dust, dirt, construction debris and the formation of condensate. All equipment so damaged shall be replaced by E/C with new equipment at no cost to Owner.

D. E/C shall periodically inspect and clean all systems and equipment to insure all systems and equipment remain in like new condition during construction. All cleaning shall be done in accordance with E/M's recommendation where available and applicable.

E. Before request for final inspection all systems and equipment shall be properly cleaned, vacuumed, polished, painted, etc. as required to return equipment to like new appearance.

F. All equipment requiring painting or touch-up shall be properly prepared and painted in accordance with this specification.

G. E/C shall keep a written record listing systems and equipment cleaned. Where special procedures or chemicals were used or where partial or complete disassembly of factory assembled equipment was necessary, E/C shall list special procedures and/or disassembly required and equipment components affected. Prior to final inspection E/C shall submit two copies of cleaning record to A/E for their records.

3.10 START-UP, CHANGE-OVER, TRAINING AND OPERATING CHECK:

A. E/C shall perform initial start-up of systems and equipment. Personnel qualified to start-up and service this equipment, including manufacturers technicians, when specified, and Owner's operating personnel shall be present during these operations.

B. E/C shall be responsible for training Owner's operating personnel to operate and maintain systems and equipment installed. Keep a record of training provided to Owner's personnel listing the date, subject covered, instructor's name, names of Owner's personnel attending and total hours of instruction given each individual.

C. E/C shall report in person to Owner's operating Engineer at end of first month of operation and thereafter at end of first month of operation and thereafter at end of sixth and twelfth months after date of substantial completion of building to check operation of equipment that was installed under contract. Contractor shall answer operating personnel's questions regarding system operation and shall ascertain that systems are operating normally and are being properly maintained by Owner. If E/C finds that systems are not being operated and maintained as designed, he shall inform the Building Engineer/Owner and A/E in writing.

D. After each inspection, E/C shall submit written report to A/E indicating condition of equipment and including any recommended changes in operation of system or other information which will be helpful to Owner.

3.11 PRE-FINAL AND FINAL CONSTRUCTION REVIEW:

A. At E/C's request, A/E will make pre-final construction review to determine if to the best of their knowledge project is completed in accordance with plans and specifications. Items found by A/E as not complete or not in accordance with requirements of contract will be outlined in report to E/C. After completion and/or correction of these items, E/C shall notify Architect he is ready for final review.

B. At same time of final construction review, E/C and his major sub-contractors shall be present or be represented by a person of authority. Each Contractor shall demonstrate, as directed by A/E, that his work complies with purpose and intent of plans and specifications. Each Contractor shall provide labor, services, instruments, and tools necessary for such demonstrations and tests.

3.12 RECORDING AND REPORTING TESTS AND DATA:

A. Record nameplate horsepower, amperes, volts, phase service factor and other necessary data on motors and other electrical equipment furnished and/or connected under this contract.

B. Record motor starter catalog number, size and rating and/or catalog number of thermal-overload units installed in all motor starters furnished and/or connected under this contract. See motor starter specification for instructions for proper sizing of thermal-overload units.

C. Record amperes-per-phase at normal or near-normal loading of each item of equipment furnished and/or connected.

D. Record correct readings of each feeder conductor after energized and normally loaded, and again after balancing of feeder loads as required by current readings.

E. Record voltage and amperes-per-phase readings taken at service entrance equipment after completion of project with building operating at normal electrical load. This reading shall be taken continuously for a 24 hour period and recorded on permanent tape and submitted to A/E.

CJD Engineering LLC 2225 W. Chesterfield Blvd., Suite. 200 Springfield, MO 65807 (417) 877-1700 Fax: (417) 324-7735

F. Record voltage and amperes at transformer secondary and primary stations, at normal loading. Record transformer percentage "taps" finally selected. Transformers shall be connected to produce voltage at building service entrance equipment as follows:

Nominal System Voltage	Service Entrance Voltage
200	208
460	480

G. Submit at least two (2) copies of data noted above to A/E for review prior to final inspection.

H. Keep a record of all deviations made from routes, locations, circuiting, etc. shown on contract drawings. Prior to final inspection submit one new set of project drawings with all deviations and changes clearly indicated.

END OF SECTION 260500

SECTION 260600 - GROUNDING AND BONDING

PART 1 - GENERAL

1.1 RELATED DOCUMENTS

A. Drawings and general provisions of the Contract, including General and Supplementary Conditions, Division 1 Specification Sections, section 260100 - General Electrical Requirements, and section 260500 - Basic Electrical Materials and Methods shall apply to this Section.

PART 2 - PRODUCTS (NOT APPLICABLE)

PART 3 – EXECUTION

A. Supplement grounded neutral of secondary distribution system with equipment grounding system, installed so that metallic structures, enclosures, raceways, junction boxes, outlet boxes, cabinets, machine frames, portable equipment and other conductive items operate continuously at ground potential and provide low impedance path for ground fault currents. System shall comply with National Electrical Code, modified as indicated on drawings as specified.

B. Provide equipment ground bus in base of low voltage switchgear or switchboard. Braze or otherwise adequately connect ground system to at least three 3/4" diameter by 10'-0" long ground rods. Where extra rods are necessary to meet requirements of specified tests, E/C shall be reimbursed for additional cost. Rods shall be located a minimum of six feet from each other of any other electrode and shall be interconnected by a minimum 3/0 bare copper conductor brazed to each ground rod below grade.

C. Ground metallic water piping system to electrical service ground with a minimum 3/0 or as required green insulated copper ground conductor, in conduit. Where a dielectric main water fitting is installed, connect ground conductor to building side of dielectric water fittings. Do not install jumper around dielectric water fitting. Bond conduit to ground conductor at each end. Provide 3/0 jumper with ground clamps around water meter.

D. Provide grounding electrode system as required by the Latest National Electrical Code, Section 250-81 -H.

E. Connect system neutral ground and equipment ground system to common ground bus.

F. Ground secondary services at supply side of each individual secondary disconnecting means and at related transformers in accordance with National Electric Code. Provide each service disconnect enclosure with neutral disconnecting means which interconnect with insulated neutral and uninsulated equipment ground sub to establish system common ground point. Neutral disconnecting links shall be located so that low voltage neutral bar with interior secondary neutrals can be isolated from common ground bus and service entrance conductors.

G. Required equipment grounding conductors and straps shall be sized in compliance with N.E.C. Table 250-95. Equipment grounding conductors shall be provided with green type TW 600 volt insulation. Related feeder and branch circuit grounding conductors shall be connected to ground bus with approved pressure connectors. Provide feeder servicing several panelboards with a continuous grounding conductor connected to each related panelboard ground bus.

H. Provide low voltage distribution system with a separate green insulated equipment grounding conductor for each single or three-phase feeder, and each branch circuit except as specified herein.

CJD Engineering LLC 2225 W. Chesterfield Blvd., Suite. 200 Springfield, MO 65807 (417) 877-1700 Fax: (417) 324-7735

Where more than one branch circuit is installed in a common raceway only one grounding conductor is required. Grounding conductor shall be sized for largest branch circuit overcurrent device serving common raceway.

I. Single phase 120 volt branch circuits for lighting shall consist of phase and neutral conductors installed in common metallic conduit which shall serve as grounding conductor. Provide flexible metallic conduit utilized in conjunction with above single phase branch circuits with suitable green insulated grounding conductors. Feeders and branch circuits in non-metallic conduits shall be provided with separate grounding conductor. Install grounding conductor in common conduit with related phase and/or neutral conductors. Where parallel feeders are installed in more than one raceway, each raceway shall have a green insulated equipment grounding conductor.

J. E/C shall provide equipment grounding bars for termination of equipment grounding conductors in panelboards and other electrical equipment. In addition to active circuits, provide pressure connectors for panel spares and blank spaces.

K. Provide electrical expansion fitting with an external flexible copper ground securely bonded by approved grounding straps on each end of fitting except where UL approved built-in copper grounding device is provided.

L. Provide non-metallic conduits or ducts with equipment grounding conductors except for conditions as follows:

1. Where ducts are for telephone or communication uses only.

M. Connect each cable rack system to equipment grounding system with insulated conductor with size determined by largest power conductor in rack. Minimum size shall be No. 6 and maximum size shall not exceed equivalent capacity of number 4/0 copper conductor. Ground conductor shall be bonded to rack system, enclosed in conduit, and connected to common ground bus.

N. Provide electric devices such as air cleaners or heaters control switch, etc., installed in air ducts, with insulated equipment ground conductor sized on rating of overcurrent device supplying unit. Bond conductor to each unit, air duct, and to ground in panelboard.

O. Provide electric immersion type water heater or surface heating cables with insulated equipment ground conductor sized on rating of overall device supplying unit. Bond conductor to water piping at unit and to ground bar in panelboard.

P. Provide steel and aluminum conduits which terminate without mechanical connection to metallic housing of electrical equipment with ground bushing and connect each bushing with bare copper conductor to ground bus in electrical equipment. Electrically non-continuous metallic conduits containing ground wiring only shall be bonded to ground wire at both conduit entrance and exit.

Q. Ground and bond exterior mounted light poles, radio and television masts and flag poles with No. 6 or larger bare copper wire connected to 96" long, 3/4" copper clad ground rod driven in ground.

R. Test complete equipment grounding system to each service disconnect enclosure ground bar with Vibroground test unit manufactured by Associated Research Inc. Resistance, without chemical treatment or other artificial means shall not exceed five (5) ohms to ground. Submit certified test reports of compliance with five (5) ohm value.

END OF SECTION 260600

CJD Engineering LLC 2225 W. Chesterfield Blvd., Suite. 200 Springfield, MO 65807 (417) 877-1700 Fax: (417) 324-7735

SECTION 260720 - ELECTRICAL SUPPORTS

PART 1 - GENERAL

1.1 RELATED DOCUMENTS

A. Drawings and general provisions of the Contract, including General and Supplementary Conditions, Division 1 Specification Sections, section 26010 0- General Electrical Requirements, and section 260500 - Basic Electrical Materials and Methods shall apply to this Section.

PART 2 - PRODUCTS

2.1 Individual conduits suspended from ceiling shall be supported by Steel City No. C-1 49 hangers.

A. Provide inserts, hangers and accessories with finish as follows:

B. Galvanized: Concrete inserts and pipe straps.

C. Galvanized or Cadmium Plated: Steel bolts, nuts, washers, and screws.

D. Painted with Prime Coat: Individual hangers, trapeze hangers and rods.

E. Equivalent hanger and support systems by Binkley, Fee and Mason, Kin-Line or Unistrut.

F. Inserts shall be Grinnel Figure 279, 281, 282, or 285 or equivalent as required by load and concrete thickness.

G. Provide beam clamps suitable for structural members and conditions.

H. Provide 3/8" minimum diameter steel hanger rods galvanized or cadmium-plated finish.

I. Trapeze hangers shall be Kindorf Series 90 channel with fittings and accessories as required.

J. Attach each conduit to trapeze hanger with Steel City No. C-1 05 clamps for rigid conduit and Steel City No. C-1 06 clamps for electrical metallic tubing (EMT).

PART 3 - EXECUTION

3.1 ELECTRICAL SUPPORTS:

A. Support vertical and horizontal conduit runs at intervals not greater than 10 feet, within 3 feet of any bend and at every outlet or junction box. Where plastic conduit is used follow E/M's recommended hanger spacing.

B. Install multiple runs of conduits as follows:

C. Where a number of conduits are to be run exposed and parallel, group and support with trapeze hangers.

D. Fasten hanger rods to structural steel members with suitable beam clamps and to concrete structures with inserts set flush with surface. Install concrete inserts with reinforced rod through opening provided in inserts.

CJD Engineering LLC 2225 W. Chesterfield Blvd., Suite. 200 Springfield, MO 65807 (417) 877-1700 Fax: (417) 324-7735

E. Install clamps for single conduit runs as follows:

F. Support individual runs by approved pipe straps, secured by toggle bolts on hollow masonry; expansion shields and machine screws or standard preset inserts on concrete or solid masonry; machine screws or bolts on metal surfaces; and wood screws on wood construction. Use of perforated strap not permitted.

G. Install exposed conduits in damp locations with clamp backs under each conduit clamp to prevent accumulation of moisture around conduits.

END OF SECTION 260720

CJD Engineering LLC 2225 W. Chesterfield Blvd., Suite. 200 Springfield, MO 65807 (417) 877-1700 Fax: (417) 324-7735

SECTION 260750 - ELECTRICAL IDENTIFICATION

PART 1 - GENERAL

1.1 RELATED DOCUMENTS

A. Drawings and general provisions of the Contract, including General and Supplementary Conditions, Division 1 Specification Sections, section 260100 - General Electrical Requirements, and section 260500 - Basic Electrical Materials and Methods shall apply to this Section.

PART 2 - PRODUCTS

2.1 ELECTRICAL IDENTIFICATION:

A. Provide identification and warning signs to wiring and equipment as listed in schedule. Signs and tags shall be as follows:

TYPE 1: Laminated phenolic plastic with black Gothic-condensed lettering by Seaton or Wilco.
TYPE 2: Self-sticking 1/2" wide plastic tape with high gloss surface and embossed lettering by Brady or Dymo.
TYPE 3: Self-sticking polyester sign with wording and size conforming to ANSI Standard Z35.1 - 1964 and OSHA 19.0.144iii(2) Specifications, by Brady or as approved.
TYPE 4: Self-sticking flexible vinyl with oil resistant adhesive for -20 degrees to 300 degrees F. temperatures by Brady or as approved.

B. Provide switchboards with Type 1 signs 2-1/2" x 12" indicating switchboards designation and electrical characteristics as noted on drawings. Provide switchboards sections operating at different voltages with Type I sign 2" x 8" indicating electrical characteristics of section. Provide each switchboard device with Type 1 sign 1-1 /4" x 5" indicating load served.

C. Provide distribution panelboards with Type 1 signs 2" x 8" indicating panel designation and electrical characteristics. Provide branch devices with Type 1 sign 1 " x 4" indicating load served.

D. Provide lighting and power panelboards with Type 1 sign 1-1/4" x 6" indicating panel designation, electrical characteristics, and source of power. Source of power indication shall indicate source panel designation and switch or breaker number. Mount inside of panel door on circuit breaker trim flange just below breakers.

E. Provide disconnect switches, time switches, lighting contactors, motor starters and controllers with Type 1 sign 1-1 /4" x 6" indicating equipment served, electrical characteristics, and source of power,

F. Provide electrical equipment and accessible wiring enclosures operating at voltage above 240 volts with Type 3 Brady No. AE-461 25 warning sign and Brady Style B, 1-1/8" x 4-1/2" voltage marker applied to front door or cover of device or enclosure. Provide large equipment such as transformers and main distribution equipment with Type 3 sign Brady No. AE-46639.

G. Provide feeders and branch circuit home runs with Type 4 wire marker indicating circuit number and power source. Provide feeders phase identification letter at each terminal point in addition to its circuit number.

H. Provide Type 2 tape at feeder terminal lugs to switchboards and panelboards. Tape shall indicate conduit size, conductor type and AWG size. Tape shall be located to be easily read with conductors installed.

CJD Engineering LLC 2225 W. Chesterfield Blvd., Suite. 200 Springfield, MO 65807 (417) 877-1700 Fax: (417) 324-7735

END OF SECTION 260750

CJD Engineering LLC 2225 W. Chesterfield Blvd., Suite. 200 Springfield, MO 65807 (417) 877-1700 Fax: (417) 324-7735

SECTION 261200 - CONDUCTORS AND CABLES

PART 1 - GENERAL

1.1 RELATED DOCUMENTS

A. Drawings and general provisions of the Contract, including General and Supplementary Conditions, Division 1 Specification Sections, section 260100 - General Electrical Requirements, and section 26050 - Basic Electrical Materials and Methods shall apply to this Section.

PART 2 - PRODUCTS

2.1 CONDUCTORS:

A. Unless noted otherwise conductors referred to are wires and cable. Provide code grade soft annealed copper conductors with specified insulation type in proper colors to conform with color coding specified. Provide conductors No. 8 gauge and larger stranded and conductors No. 10 gauge and smaller may be solid or stranded.

B. Use no conductors smaller than No. 12 gauge unless specifically called for or approved by D/E. Size wire for 120 volt branch Circuits for 3% maximum voltage drop. Size feeder circuits for 2% maximum voltage drop. Combined voltage drop of feeders and branch circuits shall not exceed 5% maximum.

C. Provide conductors for listed applications as follows:

1. Lighting and Receptacle Circuits: Type THHN, 600 volt, 90 degree C (194 degrees F) thermoplastic insulated building conductor.

2. Power Circuits and Feeders: Type THHN, 600 volt, 90 degree C 1194 degrees F) thermoplastic insulated building conductor.

3. Low Voltage and Line Voltage Conductors Sizes No. 16 and No. 18 AWG: Type TFFN, 600 volt 90 degrees C (194 degrees F) thermoplastic insulated building conductor.

4. Underground Power Circuits and Feeders: Type THHN / TWHN, 600 volt, 75 degree C (167 degrees F) wet rating and 90 degree C (194 degrees F) dry rated thermosetting filled insulating cable.

D. Provide conductors by Anaconda, General Cable, General Electric, Phelps Dodge, or equivalent.

2.2 CONDUCTOR COLOR CODING:

A. Provide continuous color coding for feeder, branch and control circuits. Insulation or identification tape color shall be same color for like circuits throughout. Where specified insulation colors are not available in larger wire sizes color code conductor at all accessible locations with Scotch 35 all-weather color code tape.

B. Identify the same phase conductor with same color throughout.

C. Provide conductors with color coding indicated. Where more than one standard voltage system is installed provide same colored conductors with indicated tape or stripe to indicate system voltage.

CJD Engineering LLC 2225 W. Chesterfield Blvd., Suite. 200 Springfield, MO 65807 (417) 877-1700 Fax: (417) 324-7735

SYSTEM VOLTAGE	CIRCUIT	INSULATION COLOR	STRIPE COLOR
277/480	Neutral	White	Orange
277/480	Phase A	Brown	--
277/480	Phase B	Orange	--
277/480	Phase C	Yellow	--
120/208	Neutral	White	--
120/208	Phase A	Black	--
120/208	Phase B	Blue	--
120/208	Phase C	Red	--
277/480	Switch	Same as Ph. Color	White
120/208	Switch	Same as Ph. Color	White
277/480	3-Way Sw Runner	Purple	Orange
120/208	3-Way Sw Runner	Purple	--
120/208	Control	Pink	--
277/480	Equip. Ground	Green	Yellow
120/208	Equip. Ground	Green	--

PART 3 - EXECUTION

3.1 CONDUCTOR INSTALLATION:

A. Run conductors in conduit continuous between outlets and junction boxes with no splices or taps pulled into conduits.

B. Neatly route, tie and support conductors terminating at switchboards, motor control centers, panelboards, sound equipment, etc. with Thomas & Betts Ty-Rap cable ties and clamps or equivalent by Electrovert or Panduit.

C. Make circuit conductor splices with Buchanan B-Cap nylon insulated connectors or equivalent by Ideal or 3M.

D. Make fixture and device taps with Scotchlock self- stripping electrical tap connectors.

E. Terminate solid conductors at equipment terminal strips and other similar terminal point with insulated solderless terminal connectors. Terminate all stranded conductor terminal points with insulated solderless terminal connectors. Provide Thomas & Betts Sta-Kon insulated terminals and connectors or equivalent by API/AMP Blackburn, Buchanan or Scotchlock.

F. Where a total of six or more control and feeder conductors terminates in a multiple device panel or enclosure that has no built-in terminal blocks provide mounting channel and see-thru covers. Equivalent terminal blocks by General Electric, Square "D" or Westinghouse.

G. Wrap conductor taps and connections requiring additional insulation with a minimum of three overlapped layers of 3 M Scotch vinyl plastic electrical tape No. 88 or equivalent,

END OF SECTION 261200

CJD Engineering LLC 2225 W. Chesterfield Blvd., Suite. 200 Springfield, MO 65807 (417) 877-1700 Fax: (417) 324-7735

SECTION 261300 - RACEWAYS AND BOXES

PART 1 - GENERAL

1.1 RELATED DOCUMENTS

A. Drawings and general provisions of the Contract, including General and Supplementary Conditions, Division 1 Specification Sections, section 260100 - General Electrical Requirements, and section 260500 - Basic Electrical Materials and Methods shall apply to this Section.

PART 2 - PRODUCTS

2.1 STEEL CONDUIT:

A. Rigid Conduit: Provide steel conduit meeting current ANSI Standard Specification C80.1 with hot-dipped galvanized and clear lacquer finish.

B. Electrical Metallic Tubing (EMT): Provide thinwall conduit meeting current ANSI Standard Specification C80.3 with electro-galvanized and clear lacquer finish.

C. Rigid Conduit and EMT Fittings: Provide Appleton Form 35 non-thread malleable iron unilets. Equivalent by CrouseHinds or Pyle National.

D. Rigid Conduit Connectors and Couplings: Provide Appleton steel NO-THREAD TYPE, rain and concrete tight. Equivalent by Thomas and Betts or Steel City.

E. EMT Connectors and Couplings: Provide Appleton steel COMPRESSION THINWALL TYPE, rain and concrete tight. Equivalent by Thomas and Betts or Steel City.

F. Liquid-Tight Flexible Conduit Fittings: Appleton "STB" series insulated connectors. Equivalent by Pyle-National or Thomas and Betts.

G. Provide insulated throat fittings when type THHN/THWN conductors are installed.

H. All wiring shall be in steel conduit unless otherwise noted.

I. Short runs of flexible galvanized steel conduit may be used where permitted by code. Lengths greater than 6 feet require review by Engineer.

J. Make conduit connections to motors and equipment mounted on resilient mounts or vibration isolators with Type U.A. liquid-tight flexible conduit manufactured by Anaconda, or "Liquatite" by Electric-Flex Company.

K. Where conduits cross building expansion joints provide O-Z expansion fitting type "AX", "TE", "EX" or "EXE" as required.

L. Provide low voltage control systems and sound systems in conduit unless noted otherwise.

M. Set screw type conduit fittings will not be allowed.

2.2 PLASTIC CONDUIT:

CJD Engineering LLC 2225 W. Chesterfield Blvd., Suite. 200 Springfield, MO 65807 (417) 877-1700 Fax: (417) 324-7735

A. Normal duty applications in concrete slabs or underground without concrete encasement. Provide rigid polyvinyl chloride (PVC) type EPC 40 heavy wall plastic conduit meeting current NEMA Standard TC-2. Conduit shall be listed UL 651 for underground and exposed use.

B. Normal duty exterior underground application direct burial: Provide semi-rigid polyvinyl chloride (PVC) type DB plastic duct meeting current NEMA Standard TC-6 and Western Underground Committee Specifications.

C. Normal exterior underground application encased burial: Provide semi-rigid polyvinyl chloride (PVC) type A plastic conduit meeting current NEMA and Western Underground Committee Specifications.

D. Provide matching plastic conduit fittings by E/M. Fittings shall meet the same Standards and specifications as the conduit on which it is installed.

E. Joining and bending of conduit and installation of fittings shall be done only by methods recommended by E/M.

F. Provide conduit support spacing as recommended by E/M for the highest ambient temperature expected,

G. Provide interlocking conduit spacers by E/M or multiple runs of underground conduits installed in same trench.

H. Ends of feeder conduit terminating at transformers, switchgear, manholes, etc. shall be terminated with bell ends to protect conductor insulation.

I. Install no plastic conduit in areas where ambient temperature may exceed 150 degrees under normal conditions nor on heat producing equipment such as boilers, incinerators, eta Install no plastic conduit in a return air or supply air plenum for the HVAC systems.

J. Provide expansion couplings on conduits located in areas where ambient temperatures are constantly changing and on long runs regardless of ambient temperatures. Determine amount of conduit expansion and contraction from E/M's published charts or tables.

K. Plastic conduit and fittings shall be by Carlon Products Division of Continental Oil Company.

L. Plastic conduit shall not be used above grade for any purpose. All transitions from PVC to steel shall be made below grade.

2.3 BUSHINGS AND LOCKNUTS:

A. Enter outlet boxes squarely and securely clamp conduit to outlet box with bushing on inside and locknut on outside. Provide Thomas and Betts #3800 Efcor 56 series or equivalent threaded malleable iron insulated throat grounding bushings.

B. Terminate metallic conduits at switchboards, panelboards, control cabinet, etc. with O-Z Electrical Manufacturing Company Type "BL" or "IGB" grounding type insulation bushings. Ground bushings to equipment grounding buss.

2.4 OUTLET BOXES:

CJD Engineering LLC 2225 W. Chesterfield Blvd., Suite. 200 Springfield, MO 65807 (417) 877-1700 Fax: (417) 324-7735

A. Provide electrical service outlets, including plug receptacles, lamp receptacles, lighting fixtures and switches with Steel City, Raco, or equivalent 4 inch code gauge steel knockout boxes galvanized or sheradized of required depth for service or device.

B. Provide code gauge galvanized steel raised covers on outlet boxes installed in plaster finish. Set to plaster grounds with outside edge of cover flush with plaster finish.

C. Provide 3/8" or larger fixture stud in each outlet box scheduled to receive lighting fixture. Select covers with proper opening for device installed in outlet box.

D. Use of utility or "Handy" boxes acceptable only where single gang flush outlet box in masonry is "dead-end" with only one conduit entering box from end or back.

E. Use no sectional outlet boxes.

F. Provide Appleton FS or FD unilets for surface mounted exterior work. Provide complete with proper device cover and gasket. Provide blank cover and gasket when used as junction box.

2.5 PULL BOXES, WIREWAYS AND GUTTERS:

A. Provide Alwalt, Keystone, Universal or equivalent code gauge pull boxes, wireways, and gutters indi cated or required for installation, sized to conform with NEC rules. Provide complete with necessary fittings, interconnecting nipples, insulating bushings, conductor supports, covers, gaskets, partitions, etc. as required,

B. Special items may be fabricated locally, to same general design and specifications as those listed in specified manufacturers catalogs. Provide free of burrs, sharp edges, unreamed holes, sharp pointed screws or bolts, and finished with one coat of suitable enamel inside and out, prior to mounting.

C. Provide sectional covers for easy removal.

PART 3 - EXECUTION

3.1 CONDUIT INSTALLATION:

A. Conduit materials, by application, shall be as follows:

1. Service entrances, feeders, and branch circuits below grade: Schedule 40 PVC. Burial depth shall shall meet cover requirements of NEC. [Refer to N.E.C. Table 300.5]. PVC conduits shall have 24” burial depth under parking lots, driveways and areas with vehicular traffic.
2. Below grade or underground feeder conduit elbows/bends shall be galvanized steel.
3. Exterior above grade feeders service entrances and feeders: Rigid galvanized steel. Transition below grade from schedule 40 PVC.
4. Interior branch circuits and feeders: EMT.
   a. Exception: Concealed branch circuits (#8 AWG and smaller) may be Type MC cable.
      1) Type MC cable installation shall comply with all NEC requirements for armored cable installation.
      2) Type MC cable shall not be installed conceled in concrete.
5. All above grade or above slab conduits shall be metallic.

B. In general conceal conduit within walls, floors, roof construction or furred spaces. Expose only feeders and short connections to equipment in equipment rooms unless noted otherwise. Install exposed conduit parallel or at right angles to building lines.

C. Install conduit to requirements of structure, other work on project and clear of openings, depressions, pipes, ducts, reinforcing steel, etc. Install conduit in concrete forms so that strength of structure will not be affected.

D. Align conduit terminations at panelboard, switchboards, motor control equipment, junction boxes, etc. and install true and plumb. Provide supports or templates to hold conduit alignment during rough-in stage of work.

E. Install conduit continuous between outlet boxes, cabinets and equipment. Make bends smooth and even without flattening or flaking conduits. Radius of bends shall not be shorter than radius listed in table 346-1 0(b) of NEC. Long radius elbows may be used where necessary.

F. Ream and clean conduit before installation, and plug or cover openings and boxes to keep conduit clean during construction.

G. Install no conduits or other raceways sized smaller than permitted in applicable NEC tables. Where conduit sizes shown on drawings are smaller than permitted by code, E/C shall include cost for proper size conduit in his base bid. In no case reduce conduit sizes indicated on drawings or specified without written approval of A/E. Fasten conduit securely in place with approved straps, hangers and steel supports. Provide O-Z cable support to support conductors in vertical raceways as required by NEC Table 300-1 9(a) of NEC. Where special hangers are required, submit hanger details to A/E for review before installation.

3.2 LOCATION OF OUTLET BOXES:

A. Locate outlet boxes generally from column centers and finished wall lines. Install ceiling outlet boxes at suspended ceiling elevations.

B. Accurately locate lighting fixtures and appliance outlet boxes mounted in concrete or in plaster finish on concrete. Install outlet boxes in forms to dimensions taken from bench marks, columns, walls, or floors. Rough-in lighting fixtures and appliance outlet boxes to general locations before installation of walls and furring and reset to exact dimensions as walls and furring are constructed. Set outlet boxes true to horizontal and vertical finish lines of building. If outlet is shown to be installed in or on a column, outlet shall be centered on column.

C. Install outlet boxes accessible. Provide outlet boxes above piping or ductwork with extension stems or offsets as required to clear piping and ductwork.

D. Install centerline of switch outlet boxes 48" above floor unless otherwise called for or required by Wainscot, counter, etc. All electrical light switches shall be located as close to door frame as possible. Under no circumstances should switch be located more than 12' from edge of door frame. Install centerline of receptacle outlet boxes 18" above floor unless otherwise called for on drawings. Adjust mounting heights to nearest masonry joint for minimum cutting in case of flush outlets. All thermostats shall be centered above light switches wherever possible. If switch outlet is shown to be installed in or on a column, switch outlet shall be centered on column.

E. Install clock and other outlet boxes at elevations indicated on drawings or as directed by A/E. Center bracket lights over mirrors with 2" clearance above mirror.

CJD Engineering LLC 2225 W. Chesterfield Blvd., Suite. 200 Springfield, MO 65807 (417) 877-1700 Fax: (417) 324-7735

END OF SECTION 261300

CJD Engineering LLC 2225 W. Chesterfield Blvd., Suite. 200 Springfield, MO 65807 (417) 877-1700 Fax: (417) 324-7735

SECTION 261400 - WIRING DEVICES

PART 1 - GENERAL

1.1 RELATED DOCUMENTS

A. Drawings and general provisions of the Contract, including General and Supplementary Conditions, Division 1 Specification Sections, section 260100 - General Electrical Requirements, and section 260500 - Basic Electrical Materials and Methods shall apply to this Section.

PART 2 - PRODUCTS

2.1 RECEPTACLES:

A. Provide Hubbell specification grade NEMA Standard WD-1-1974 grounding receptacles with color as selected by A/E:

TYPE	NEMA	CAT.#	AMP	VOLTAGE
Duplex	5-20R	Hubbell 5352A	20	125
Ground Fault	5-20R	Hubbell GF20	20	125

B. Provide Hubbell weatherproof receptacles as follows:

WP - Install device in Hubbell RW51040 lift coverplate.
WPI - Install device in Hubbell RW57300 “While-In-Use” cover.

C. Provide Hubbell grounding receptacles as follows:

TYPE	NEMA	CAT#	AMP	VOLTAGE
Combination	10-30	Hubbell RR430F	30	125/250
Combination	10-50	Hubbell RR450F	50	125/250

D. Equivalent receptacles by Cooper Wiring, Leviton, Pass & Seymour.

E. Provide receptacles in colors as selected by architect or interior designer.

2.2 WALL SWITCHES:

A. Provide Hubbell NEMA Standard WD-1 -1974 switches with compound handles. Install groups of switches under one coverplate.

B. Provide switches in colors as selected by by architect or interior designer.

C. Switches controlling loads of 1800 watts or less shall be as follows unless specified otherwise:

TYPE	CATALOG #	AMP	VOLTAGE
Single Pole	Hubbell 1221	20	120/277
Three Way	Hubbell 1223	20	120/277
Four Way	Hubbell 1224	20	120/277
Pilot Light	Hubbell HBL1221PL	20	120/277
Double Pole	Hubbell 1222	20	120/277
Single Pole, Key Op.	Hubbell HBL1221L	20	120/277
Three Way, Key Op.	Hubbell HBL1223L	20	120/277

CJD Engineering LLC 2225 W. Chesterfield Blvd., Suite. 200 Springfield, MO 65807 (417) 877-1700 Fax: (417) 324-7735

Four Way, Key Op.	Hubbell HBL1224L	20	120/277

D. Equivalent switches by Cooper Wiring, Pass & Seymour, Bryant or Leviton.

2.6 FLUSH WALL PLATES:

A. Provide Hubbell type 302 stainless steel wallplates conforming to U.L., NEMA and Federal Specification WP-455A. Verify with architect and/or interior designer prior to ordering and installation.

B. Provide wallplates for all switches, receptacles, blanks, telephone, computer and special purpose outlets.

C. Plates shall be modern design, having rounded edges and corners complete with finish-matching mounting screws.

D. Provide flush wallplates on wiremold switch and receptacle boxes.

E. Provide factory engraved wallplates where indicated. Where engraved text is not outlined, submit two copies of proposed text to A/E for review and approval prior to engraving.

F. Wallplates shall not support wiring devices. Provide wiring device accessories as required to properly install devices and wallplates.

G. Provide jumbo wallplates for all wiring devices installed in masonry walls.

H. Provide wallplates of one design throughout the building.

I. Provide designs and finishes equivalent to above specifications where wallplates for special devices are available only from manufacturer of device.

J. Verify with A/E finish of any plate where it may be apparent a special finish or color should have been specified.

K. Provide narrow wallplates as indicated.

L. Ganged wiring devices shall have a single wallplate.

M. Provide wallplates manufactured by same company as wiring devices.

PART 3 - EXECUTION (NOT APPLICABLE)

END OF SECTION 261400

CJD Engineering LLC 2225 W. Chesterfield Blvd., Suite. 200 Springfield, MO 65807 (417) 877-1700 Fax: (417) 324-7735

SECTION 261450 - LIGHTING CONTROL DEVICES

PART 1 - GENERAL

1.1 RELATED DOCUMENTS

A. Drawings and general provisions of the Contract, including General and Supplementary Conditions, Division 1 Specification Sections, section 260100 - General Electrical Requirements, and section 260500 - Basic Electrical Materials and Methods shall apply to this Section.

PART 2 - PRODUCTS

2.1 LIGHTING CONTACTORS:

A. Provide 600 volt, 60 cycle mechanically or electrically held lighting contactors with proper NEMA enclosure required by contactor location and environment.

B. Contactors shall have silver alloy, double break power contacts replaceable without removing power wiring or contactor from enclosure.

C. Coils shall be molded case construction permanently marked with coil voltage and frequency and be replaceable without removing contactor from enclosure.

D. Provide contactor with internal wiring and control circuits prewired with only line, load, and external control circuits wiring connections required, Provide contactor with build-in clearing interlocks to allow control from either momentary or maintained pilot devices.

E. Contactor shall be suitable for addition of at least two electrical interlocks of any arrangement of normally open or closed contacts.

F. Provide contactor with accessories such as auxiliary contacts, pilot lights, on-off, or H.O.A. switches required to obtain control sequence shown on plans or specified. Accessories shall be available as kits for field installation or modification.

G. Where three or more contactors are installed at one location contactors may be installed in group control panel in lieu of separate devices.

H. Contactors by Allen Bradley, Cutler-Hammer, Furnas, ITE, Challenger, Square D or General Electric.

I. See Schedule.

2.2 PHOTOCELLS AND TIME SWITCHES :

A. Provide photocells and time switches as indicated on drawings and in schedules.

B. Equivalent by Intermatic, Paragon, Rainbird or Tork.

C. See schedule.

CJD Engineering LLC 2225 W. Chesterfield Blvd., Suite. 200 Springfield, MO 65807 (417) 877-1700 Fax: (417) 324-7735

2.3 OCCUPANCY SENSORS

A. Provide occupancy sensors and power packs as indicated on drawings and in schedules.

B. Equivalent by Greengate, Hubbell, Leviton or Wattstopper.

C. See schedule.

PART 3 - EXECUTION (Not Applicable)

END OF SECTION 261450

CJD Engineering LLC 2225 W. Chesterfield Blvd., Suite. 200 Springfield, MO 65807 (417) 877-1700 Fax: (417) 324-7735

SECTION 262500 – EMERGENCY STANDBY GENERATOR

PART 1 - GENERAL

1.1 RELATED DOCUMENTS

A. Drawings and general provisions of the Contract, including General and Supplementary Conditions and Division 01 Specification Sections, apply to this Section.

1.2 WORK INCLUDES

A. Provide Emergency/Standby Electric Generating System, including generator, accessories, and transfer switches.

B. Generator enclosure, etc. shall be provided with dimensions to accommodate installation location specified within required clearances

1.3 SUBMITTALS

A. As a minimum for all equipment specified:
1. Specification and data sheets.
2. Manufacturer's certification of prototype testing.
3. Manufacturer's published warranty documents.
4. Shop drawings showing plan and elevation views with certified overall and interconnection point dimensions.
5. Interconnection wiring diagrams showing all external connections required; with field wiring terminals marked in a consistent point-to-point manner.
6. Manufacturer's installation instructions.

1.4 QUALITY ASSURANCE

A. Regulatory requirements:
1. NFPA - 70 (NEC, Latest Edition).
2. NFPA - 37.
3. NFPA - 99.
4. NFPA - 101.

1.5 WARRANTY

A. A warranty shall be provided for all products against defects in materials and workmanship, for two-year period from the start-up date, per the manufacturer's Base Coverage Limited Warranty.

1.6 PRODUCT DELIVERY, STORAGE AND HANDLING

A. Materials shall be suitably packaged by manufacturer to prevent damage during shipment. Damaged materials will not be acceptable for use.

B. Store materials on site in clean, dry storage area.

CJD Engineering LLC 2225 W. Chesterfield Blvd., Suite. 200 Springfield, MO 65807 (417) 877-1700 Fax: (417) 324-7735

C. Handle all materials carefully to preclude damage. Material with damaged insulation shall not be acceptable for use.

1.7 PARTS AND SERVICE QUALIFICATIONS

A. The engine-generator supplier shall maintain 24-hour parts and service capability within 100 miles of the project site. The distributor shall stock parts as needed to support the generator set package for this specific project. The supplier must carry sufficient inventory to cover no less than 80% parts service within 24hrs and 95% within 48 hours.

B. The engine-generator dealer shall maintain qualified factory trained service personnel.

PART 2 - PRODUCTS

2.1 RATINGS

A. Refer to schedule on plans, for generator set standby power rating and system output voltage.

B. Site Conditions: Altitude 815 FT. Temperatures up to 110°F. (43°C.).Retain this article for special warranties. Verify length of warranty period with manufacturers.

2.2 EMERGENCY/STANDBY ELECTRIC GENERATOR SET

A. Single Supplier: The supplier shall be the manufacturer's authorized distributor, who shall provide initial start-up services, conduct field acceptance testing, and warranty service. The supplier shall have 24-hour service availability and factory-trained service technicians authorized to do warranty service on all warrantable products.

B. 4-cycle, 1800 rpm, engine generator set with low reactance brushless generator, torque-matched excitation, automatic voltage regulator, set-mounted control panel, and high ambient cooling system (50°C.).

C. Refer to schedule on electrical plans for generator fuel type.

D. Prototype Tests and Evaluation: Prototype tests shall have been done on a complete and functional unit, component level type tests will not substitute for this requirement.

E. Performance:
1. Frequency regulation shall be isochronous from steady state no load to steady state rated load.
2. The engine-generator set shall be capable of single step load pick up of 100% nameplate kW and power factor, less applicable de-rating factors, with the engine-generator set at operating temperature.
3. Refer to schedule on plans for motor starting capability (minimum sKVA) with 30% voltage dip. The generator set shall be capable of sustaining a minimum of 90% of rated no load voltage with the specified kVA load at near zero power factor applied to the generator set.
4. Maximum transient voltage dip shall be 24% below rated, and maximum frequency dip shall be 6% below rated, on application of the single largest surge load step.

F. AC Generator:

1. The AC generator shall be; synchronous, four pole, revolving field, drip-proof construction, single prelubricated sealed bearing, air cooled by a direct drive centrifugal blower fan, and directly connected to the engine with flexible drive disc(s).
2. All insulation system components shall meet NEMA MG1 temperature limits for Class H insulation system. Actual temperature rise measured by resistance method at full load shall not exceed 125°C.
3. The generator shall be broad range, 12 lead reconnectable. The generator shall be capable of delivering rated output (kVA) at rated frequency and power factor, at any voltage within the broad range.
4. A permanent magnet generator (PMG) or an auxiliary winding, regulator exciter principle (AREP) excitation system shall be provided. The system shall sustain excitation power for optimum motor starting and to sustain short circuit current at approximately 300% of rated current for not more than 10 seconds.
5. The automatic voltage regulator shall be a temperature compensated, solid-state design. The regulator shall control buildup of AC generator voltage to provide a linear rise and limit overshoot. The regulator shall include a torque-matching characteristic, which shall reduce output voltage in proportion to frequency below a threshold of 58-59 HZ. The torque-matching characteristic shall use differential rate of frequency change compensation to use the maximum available engine torque and provide optimal transient load response. Regulators which use a straight-line fixed volts per hertz characteristic are not acceptable.

G. Engine-Generator Set Control:

1. The control shall have automatic remote start capability from a panel-mounted 3-position (Stop, Run, and Remote) switch.
2. Provide cycle cranking of 15 SEC (ON)/15 SEC (OFF) for three attempts (75 SEC). If engine fails to start lockout the engine and indicate overcrank on alarm status panel.
3. The control shall shut down and lock out upon: failing to start (overcrank), overspeed, low lubricating oil pressure, high engine temperature, or operation of a remote manual stop station. A panel mounted switch shall reset the engine monitor and test all the lamps. Lamp indications on the control panel shall include:
   a. Overcrank shutdown - red
   b. Overspeed shutdown - red
   c. Low oil pressure shutdown - red
   d. High engine temperature shutdown - red
   e. High engine temperature prealarm - yellow
   f. Low engine oil pressure prealarm - yellow
   g. Low coolant temperature - yellow
   h. Low fuel - yellow
   i. Run - green
   j. Not in automatic start - flashing red
   k. Auxiliary (2 each)- red. (Customer identified)

4. The NEMA 3R enclosed control panel shall be mounted on the generator set with vibration isolators. A front control panel illumination lamp with ON/OFF switch shall be provided. Control panel mounted indicating meters and devices shall include:
   a. Engine Oil Pressure Gauge, Coolant Temperature Gauge, DC Voltmeter, and Running Time Meter (hours);
   b. Voltage adjusting rheostat, locking screwdriver type, to adjust voltage +/- 5% from rated value;
   c. Analog AC Voltmeter, dual range, 90° scale, 2% accuracy;

d. Analog AC Ammeter, dual range, 90° scale, 2% accuracy;
e. Analog Frequency/RPM meter, 45-65 Hz, 1350-1950 RPM, 90° scale, +/- 0.6 Hz accuracy;
f. Seven position phase selector switch with OFF position to allow meter display of current and voltage in each phase. When supplied with reconnectable generators, the meter panel shall be reconnectable for the voltage specified.

H. Engine:

1. The engine shall be 4 cycle, radiator and fan cooled.
2. An electronic governor shall provide automatic frequency regulation adjustable from isochronous to 5% droop. The governor shall have provision for paralleling with the addition of load sharing controls.
3. The engine shall be cooled by a mounted closed loop radiator system rated for full load operation in 122°F. (50°C.) ambient as measured at the generator air inlet. Radiators shall be provided with a duct adaptor flange. The cooling system shall be filled with 50/50 ethylene glycol/water mixture by the equipment supplier. Rotating parts shall be guarded against accidental contact.

I. Engine Accessory Equipment: The engine-generator set shall include the engine accessories as follows:

1. An electric starter(s) capable of three complete cranking cycles without overheating, before overcrank shutdown (75 seconds).
2. Positive displacement, mechanical, full pressure, lubrication oil pump. Full flow lubrication oil filters with replaceable spin-on canister elements and dipstick oil level indicator.
3. An engine driven, mechanical, positive displacement fuel pump. Fuel filter with replaceable spin-on canister element. Replaceable dry element air cleaner with restriction indicator. Flexible supply and return fuel lines.
4. Engine mounted battery charging alternator, 45-ampere minimum, and solid-state voltage regulator.

J. Base: The engine-generator set shall be mounted on a heavy duty steel base to maintain alignment between components. The base shall incorporate a battery tray with hold-down clamps within the rails.

K. Generator Set Auxiliary Equipment and Accessories:

1. Provide output circuit breakers, as shown on schedule, set-mounted and wired, UL listed, molded case, electronic trip elements, thermal-magnetic type, rating as shown on the electrical bid documents, with adjustable trip settings of 50-100%.
2. Engine mounted thermostatically controlled, water jacket heater for each engine. The heater(s) shall be sized as recommended by the equipment supplier. Heater voltage shall be as required.
3. Vibration isolators shall be installed between frame and generator. Quantity shall as recommended by the generator set manufacturer.
4. Starting and Control Batteries: Starting batteries, lead acid type, 24 volt DC, sized as recommended by the generator set manufacturer, shall be supplied for each generator set with battery cables and connectors.
5. Remote Annunciator: Provide and install a remote alarm annunciator located as shown on the drawings. The remote annunciator shall provide all the indications and audible alarms called for by NFPA Standard 110 as provided on the engine generator set control panel; and in addition shall provide indications for high battery voltage, low battery voltage, normal battery voltage, battery charger malfunction. Alarm silence and lamp test switches shall be provided.
6. Where applicable for fuel type and installation location and per schedule on electrical plans:

CJD Engineering LLC 2225 W. Chesterfield Blvd., Suite. 200 Springfield, MO 65807 (417) 877-1700 Fax: (417) 324-7735

a. Sub-Base Fuel Storage Tank: Provide a double wall sub-base fuel storage. The tank shall be made of corrosion resistant steel. Provide an automatic leak detection system in the space between the walls. Tank shall be UL Listed. Provide a low fuel level contact, over fill alarm and a rupture basin alarm contact. Provide capacity for a minimum full load running time of 24 hours.
b. Outdoor weather and sound enclosure, factory-assembled to generator set base and radiator cowling. Housing shall provide ample airflow for generator set operation. The housing shall have hinged side-access doors and rear control door. All doors shall be lockable. All sheetmetal shall be primed for corrosion protection and finish painted with the manufacturer's standard color.

2.3 TRANSFER SWITCH EQUIPMENT

A. Complete factory assembled transfer equipment with electronic control designed for surge voltage isolation, voltage sensors on all phases of sources, linear operator, permanently attached manual handles, positive mechanical and electrical interlocking, and mechanically held contacts. Equipment rated 1000 amps and less shall include quick-make, quick-break contact mechanisms for manual transfer under load.

B. Refer to the project drawings and the specifications herein for type of transfer switch equipment, withstand and closing ratings, number of poles, voltage and ampere ratings, enclosures, and accessories.

C. All transfer switches and accessories shall be UL listed and labeled, tested per UL Standard 1008, and CSA Approved.

1. Ratings: Main contacts shall be rated for 600 Volts AC minimum on transfer switches 40 - 1000 amps; and 480 Volts AC minimum on transfer switches 1200 - 3000 amps.
2. Transfer switch shall be rated to carry 100% of rated current continuously in the enclosure. Circuit breaker type transfer switches do not meet this specification.
3. Transfer switch shall be continuously rated in ambient temperatures of -40 to +50°C., relative humidity up to 95% (non-condensing), and altitudes up to 10,000 feet.
4. Transfer switch equipment shall have a with stand and closing rating (WCR) in RMS symmetrical amperes greater than the available fault currents shown on the drawings.

D. Construction: Transfer switches shall be double-throw, electrically and mechanically interlocked, and mechanically held in both positions.
1. Transfer switches rated through 1000 amperes shall be equipped with permanently attached manual operating handles and quick-break, quick-make over-center contact mechanisms suitable for safe manual operation under load. Transfer switches over 1000 amperes shall be equipped with manual operators for service use only under de-energized conditions.
2. Main switch contacts shall be high-pressure silver alloy. Contact assemblies shall have arc chutes for positive arc extinguishment. Arc chutes shall have insulating covers to prevent interphase flashover.
3. Provide one set Form C auxiliary contacts on both sides, operated by transfer switch position, rated 10 amp 250 VAC.
4. Enclosures shall be UL listed. The enclosure shall provide NEC wire bend space. The cabinet door shall be key-locking. Controls on cabinet door shall be key-operated. Provide switch position indicator lamps and power available lamps for both sources on the outside cabinet door.

E. Automatic Controls: Control shall be solid-state and designed for a high level of immunity to power line surges and transients, demonstrated by test to IEEE Standard 587-1980. The control shall have optically isolated logic inputs, high isolation transformers for AC inputs, and relays on all outputs.
   1. Solid-state undervoltage sensors shall simultaneously monitor all phases of both sources. Pick-up and drop-out settings shall be adjustable. Voltage sensors shall allow for adjustment to sense partial loss of voltage on any phase. Voltage sensors shall have field calibration of actual supply voltage to nominal system voltage.
   2. Automatic controls shall signal the engine-generator set to start upon signal from normal source sensors. Solid-state time delay start, adjustable from 0 to 15 seconds (factory set at 2 seconds) shall avoid nuisance start-ups. Battery voltage starting contacts shall be gold, dry type contacts factory wired to a field wiring terminal block.
   3. The switch shall transfer when the emergency source reaches the set point voltage and frequency. Provide a solid-state time delay on transfer, adjustable from 0 to 120 seconds.
   4. The switch shall retransfer the load to the normal source after a time delay retransfer, adjustable from 0 to 30 minutes. Retransfer time delay shall be immediately bypassed if the emergency power source fails.
   5. Controls shall signal the engine-generator set to stop after a time delay, adjustable from 0 to 10 minutes, beginning on return to the normal source.
   6. Power for transfer operation shall be from the source to which the load is being transferred.
   7. The control shall include latching diagnostic indicators to pinpoint the last successful step in the sequence of control functions, and to indicate the present status of the control functions in real time, as follows:
      a. Source 1 OK
      b. Start Gen Set Source 2 OK
      c. Transfer Timing
      d. Transfer Complete
      e. Retransfer Timing
      f. Retransfer Complete
      g. Timing for Stop
   8. The control shall include provisions for remote transfer inhibit and area protection.
   9. Transfer switches as designated in the schedule herein, shall be equipped with a field adjustable time delay during switching in both directions, during which time the load is isolated from both power sources, to allow load residual voltage to decay before closure to the opposite source. The delay feature shall have an adjustable range of 0 to 7.5 seconds. Phase angle monitor is not acceptable.

F. Front Panel Devices: Provide devices mounted on cabinet front consisting of:
   1. A key-operated selector switch to provide the following positions and functions:
      a. Test - Simulates normal power loss to control for testing of generator set. Controls shall provide for a test with or without load transfer.
         1) Normal - Normal operating position.
      b. Retransfer - Momentary position to override retransfer time delay and cause immediate return to normal source, if available.

G. Transfer switches shall be provided with the following accessory item;
   1. 5 Amp Battery Charger
   2. Exerciser Clock
   3. AC Meters
   4. Adjustable Time Delay
   5. Continuity Monitoring Module at Fire Pump ATS

2.4 ACCEPTABLE MANUFACTURERS

A. Caterpillar

B. Cummins/Onan

C. Kohler

D. MTU Onsite Energy

E. Generac

PART 3 - EXECUTION

3.1 INSTALLATION

A. Installation shall comply with applicable state and local codes as required by the authority having jurisdiction. Install equipment in accordance with manufacturer's instructions and instructions included in the listing or labeling of UL listed products.

B. The generator set shall be set on a reinforced concrete pad no less than 6" thick. Reinforcement shall be with #4 bars space 12" on center each way. The set shall be anchored to the pad with a minimum of (6) 3/8" anchor bolts.

3.2 FACTORY TESTS

A. Generator set factory tests on the equipment to be shipped, shall be performed at rated load and 0.8 PF. Generator sets that have not been factory tested at 0.8 PF will not be acceptable. Tests shall include: run at full load, maximum power, voltage regulation, transient and steady-state governing, single step load pickup, and safety shutdowns.
   1. Provide a factory certified record of the production testing.

B. Transfer equipment factory tests: Each transfer switch supplied shall be factory tested before shipment. Factory tests shall include a complete functional test of the transfer switch controls, including calibration of the voltage sensors.

END OF SECTION 26 2500

SECTION 264100 - SAFETY SWITCHES

PART 1 - GENERAL

1.1 RELATED DOCUMENTS

A. Drawings and general provisions of the Contract, including General and Supplementary Conditions, Division 1 Specification Sections, section 260100 - General Electrical Requirements, and section 260500 - Basic Electrical Materials and Methods shall apply to this Section.

PART 2 - PRODUCTS

2.1 FUSED DISCONNECT SWITCHES:

A. Provide heavy duty and general duty horsepower rated safety switches rated in accordance with NEMA enclosed Switch Standard KS-1 -1975 and UL 98 Standard and as scheduled.

B. Enclosure shall be NEMA type required by switch location and environment. Enclosure door shall have latch with means for padlocking and cover interlock with defeater to prevent opening door when switch is energized or closing switch with door open. Switch shall have an embossed nameplate permanently attached to door front with switch rating, short circuit interrupting capacity and application information.

C. Line terminals shall be permanently marked and shielded. Contacts shall be tin plated, equipped with arc chutes and have moving contacts visible in off position with door open. Wiring terminals shall be pressure type suitable for copper or aluminum wire. Switching mechanism shall be quick-make, quick-break spring driven anti-tease mechanism and be integral part of box. All current carrying parts shall be plated.

D. Fuse holders for 1 to 600 amperes shall be high pressure type for use with Class R current limiting fuses. Fuse holders shall be completely accessible from front of switch.

E. Provide switches by Cutler-Hammer, General Electric, ITE Gould, Square D, Challenger or Westinghouse.

F. See Disconnect Switch Schedule on the drawings.

PART 3 – EXECUTION (NOT APPLICABLE)

END OF SECTION 264100

CJD Engineering LLC 2225 W. Chesterfield Blvd., Suite. 200 Springfield, MO 65807 (417) 877-1700 Fax: (417) 324-7735

SECTION 264410 - SWITCHBOARDS

PART 1 - GENERAL

1.1 RELATED DOCUMENTS

A. Drawings and general provisions of the Contract, including General and Supplementary Conditions, Division 1 Specification Sections, section 260100 - General Electrical Requirements, and section 260500 - Basic Electrical Materials and Methods shall apply to this Section.

1.2 SECTION INCLUDES

A. Main Switchboard - Furnish and install the Service Entrance switchboard(s) as herein specified and shown on the associated electrical drawings.

B. Distribution Switchboard - Furnish and install the Distribution Switchboard(s) as herein specified and shown on the associated electrical drawings.

1.3 REFERENCES

A. The switchboard(s) and overcurrent protection devices referenced herein are designed and manufactured according to the following appropriate specifications.
   1. ANSI/NFPA 70 - National Electrical Code (NEC).
   2. ANSI/IEEE C12.16 - Solid State Electricity Metering.
   3. ANSI C57.13 - Instrument Transformers.
   4. NEMA AB 1 - Molded Case Circuit Breakers and Molded Case Switches.
   5. NEMA PB 2 - Deadfront Distribution Switchboards, File E8681
   6. NEMA PB 2.1 - Proper Handling, Installation, Operation and Maintenance of Deadfront Switchboards Rated 600 Volts or Less.
   7. NEMA PB 2.2 - Application Guide for Ground Fault Protective Devices for Equipment.
   8. UL 50 - Cabinets and Boxes.
   9. UL 489 - Molded Case Circuit Breakers.
   10. UL 891 - Dead-Front Switchboards.
   11. UL 943 - Ground Fault Circuit Interrupters.
   12. Federal Specification W-C-375B/Gen - Circuit Breakers, Molded Case, Branch Circuit And Service.

1.4 SUBMITTALS

A. Shop Drawings shall indicate front and side enclosure elevations with overall dimensions shown; conduit entrance locations and requirements; nameplate legends; one-line diagrams; equipment schedule; and switchboard instrument details.

1.5 QUALIFICATIONS

A. To be considered for approval, a manufacturer shall have specialized in the manufacturing and assembly of switchboards for at least fifty (50) years.

B. Furnish products listed by Underwriters Laboratories Incorporated and in accordance with standards listed in Article 1.03 - References.

C. The manufacturing facility shall be registered by Underwriters Laboratories Inc. to the International Organization for Standardization ISO 9002 Series Standards for quality.

CJD Engineering LLC 2225 W. Chesterfield Blvd., Suite. 200 Springfield, MO 65807 (417) 877-1700 Fax: (417) 324-7735

1.6 DELIVERY, STORAGE, AND HANDLING

A. Deliver, store, protect, and handle products in conformance with manufacturer's recommended practices as outlined in applicable Installation and Maintenance Manuals.
B. Each switchboard section shall be delivered in individual shipping splits for ease of handling. They shall be individually wrapped for protection and mounted on shipping skids.
C. Inspect and report concealed damage to carrier within their required time period.
D. Store in a clean, dry space. Maintain factory protection and/or provide an additional heavy canvas or heavy plastic cover to protect structure from dirt, water, construction debris, and traffic. Where applicable, provide adequate heating within enclosures to prevent condensation.
E. Handle in accordance with NEMA PB 2.1 and manufacturer's written instructions. Lift only by lifting means provided for this express purpose. Handle carefully to avoid damage to switchboard internal components, enclosure, and finish.

1.7 ENVIRONMENTAL REQUIREMENTS

A. Conform to NEMA PB 2 service conditions during and after installation of switchboards.

1.8 MAINTENANCE MATERIALS

A. Provide one (1) set of installation and maintenance instructions with each switchboard. Instructions are to be easily identified and affixed within the incoming or main section of the line-up.

1.9 WARRANTY

A. Manufacturer shall warrant equipment to be free from defects in materials and workmanship for the lesser of one (1) year from date of installation or eighteen (18) months from date of purchase.

PART 2 - PRODUCTS

2.1 MANUFACTURERS

A. Shall be Square D Company.
B. Equivalent by Eaton, General Electric and Seimens.

2.2 SWITCHBOARD - GENERAL

A. Future Provisions: All unused spaces provided, unless otherwise specified, shall be fully equipped for future devices, including all appropriate connectors and mounting hardware.

B. Enclosure:
1. Sections shall be aligned front and rear.
2. Removable steel base channels (1.5 inch floor sills) shall be bolted to the frame to rigidly support the entire shipping section for moving on rollers and floor mounting.
3. The switchboard enclosure shall be painted on all exterior surfaces. The paint finish shall be a medium gray, ANSI #49, applied by the electro-deposition process over an iron phosphate pre-treatment.
4. All front covers shall be screw removable with a single tool and all doors shall be hinged with removable hinge pins.
5. Top and bottom conduit areas shall be clearly indicated on shop drawings.

CJD Engineering LLC 2225 W. Chesterfield Blvd., Suite. 200 Springfield, MO 65807 (417) 877-1700 Fax: (417) 324-7735

C. Nameplates: Provide 1 inch high x 3 inches engraved laminated (Gravoply) nameplates for each device. Furnish black letters on a white background for all voltages.

D. Bus Composition: Shall be tin-plated aluminum. Plating shall be applied continuously to all bus work. The switchboard bussing shall be of sufficient cross-sectional area to meet UL Standard 891 temperature rise requirements. The phase and neutral through-bus shall have an ampacity as shown in the plans. For 4-wire systems, the neutral shall be of equivalent ampacity as the phase bus bar. Tapered bus is not acceptable. Full provisions for the addition of future sections shall be provided. Bussing shall include all necessary hardware to accommodate splicing for future additions.

E. Ground Bus: Sized per NFPA70 and UL 891 Tables 25.1 and 25.2 and shall extend the entire length of the switchboard. Provisions for the addition of future sections shall be provided.

2.3 SWITCHBOARD - INCOMING MAIN SECTION DEVICES

A. Six (6) Service Disconnects
1. Incoming conductors shall terminate at lug landing pads.
2. All lugs shall be UL Listed to accept solid and/or stranded copper and aluminum conductors. Lugs shall be suitable for 75° C rated wire, sized according to the 75° C temperature rating in the NEC.
3. Provide mechanical type lugs to accommodate the conductor shown on the associated drawings.

B. Group mounted circuit breakers through 1200A
1. Circuit breaker(s) shall be group mounted plug-on with mechanical restraint on a common pan or rail assembly.
2. The interior shall have three flat bus bars stacked and aligned vertically with glass reinforced polyester insulators laminated between phases. The molded polyester insulators shall support and provide phase isolation to the entire length of bus.
3. Circuit breaker(s) equipped with line terminal jaws shall not require additional external mounting hardware. Circuit breaker(s) shall be held in mounted position by a self-contained bracket secured to the mounting pan by fasteners. Circuit breaker(s) of different frame sizes shall be capable of being mounted across from each other.
4. Line-side circuit breaker connections are to be jaw type.
5. All unused spaces provided, unless otherwise specified, shall be fully equipped for future devices, including all appropriate connectors and mounting hardware.
6. Electronic trip molded case standard function 80% rated circuit breakers through 1200A
   a. All electronic circuit breakers shall have the following time/current response adjustments: Long Time Pickup, Long Time Delay, Short Time Pickup, Short Time Delay, and Instantaneous settings. Each adjustment shall have discrete settings (fully adjustable) and shall be independent of all other adjustments.
   b. Circuit breaker trip system shall be a microprocessor-based true rms sensing designed with sensing accuracy through the thirteenth (13th) harmonic. Sensor ampere ratings shall be as indicated on the associated [schedule] [drawing].
   c. Long Time Pickup indication to signal when loading approaches or exceeds the adjustable ampere rating of the circuit breaker shall be provided.
   d. Furnish thermal magnetic molded case circuit breakers for 250A frames and below.
7. Thermal magnetic molded case circuit breakers through 250A
   a. Molded case circuit breakers shall have integral thermal and instantaneous magnetic trip in each pole.
   b. Circuit protective devices shall be Square D molded case circuit breaker(s). Ampere ratings shall be as shown on the drawings.
   c. Manufacturer shall submit one set of published Ip and I^2t let-through curves (as required by UL) to the owner.

CJD Engineering LLC 2225 W. Chesterfield Blvd., Suite. 200 Springfield, MO 65807 (417) 877-1700 Fax: (417) 324-7735

C. Individually Mounted circuit breakers through 4000A

1. Electronic trip molded/insulated case full function 100% rated circuit breaker(s) through 4000A
   a. All electronic circuit breakers shall have the following time/current response adjustments: Long Time Pickup, Long Time Delay, Short Time Pickup, Short Time Delay, and Instantaneous settings. Each adjustment shall have discrete settings (fully adjustable) and shall be independent of all other adjustments.
   b. Circuit breaker trip system shall be a microprocessor-based true rms sensing designed with sensing accuracy through the thirteenth (13th) harmonic.
   c. Local visual trip indication for overload, short circuit and ground fault trip occurrences.
   d. Long Time Pickup indication to signal when loading approaches or exceeds the adjustable ampere rating of the circuit breaker shall be provided.
   e. Manufacturer shall submit one set of published Ip and I^2t let-through curves (as required by UL) to the owner.

2.4 ACCESSORIES

A. For switchboards installed outdoor only, provide thermostatically-controlled electric heaters in each section. [Provide terminals for separate source connection of heater power circuit. Voltage Rating: 120 V. Provide control power transformer with the total VA rating of the electric heaters in the switchboard.
B. Provide integral PowerLogic ION6200 meter.

PART 3 - EXECUTION

3.1 INSPECTION

A. Examine area to receive switchboard to provide adequate clearance for switchboard installation.
B. Check that concrete pads are level and free of irregularities.
C. Start work only after unsatisfactory conditions are corrected.

3.2 INSTALLATION

A. Install switchboard in accordance with manufacturer's written guidelines, the NEC, and local codes.

3.3 FIELD QUALITY CONTROL

A. Inspect completed installation for physical damage, proper alignment, anchorage, and grounding.
B. Measure, using a Megger, the insulation resistance of each bus section phase-to-phase and phase-to-ground for one minute each, at minimum test voltage of 1000 VDC; minimum acceptable value for insulation resistance is 1 megohms. NOTE: Refer to manufacturer's literature for specific testing procedures.
C. Check tightness of accessible bolted bus joints using calibrated torque wrench per manufacturer's recommended torque values.
D. Physically test key interlock systems to check for proper functionality.
E. Test ground fault systems by operating push-to-test button.

3.4 ADJUSTING

A. Adjust all operating mechanisms for free mechanical movement per manufacturers specifications.
B. Tighten bolted bus connections in accordance with manufacturer's instructions.
C. Adjust circuit breaker trip and time delay settings to values indicated.

CJD Engineering LLC 2225 W. Chesterfield Blvd., Suite. 200 Springfield, MO 65807 (417) 877-1700 Fax: (417) 324-7735

D. Provide selective coordination study of complete electrical distribution system and submit to engineer for review and approval.

3.5 CLEANING

A. Touch up scratched or marred surfaces to match original finish.

END OF SECTION 264410

CJD Engineering LLC 2225 W. Chesterfield Blvd., Suite. 200 Springfield, MO 65807 (417) 877-1700 Fax: (417) 324-7735

SECTION 264113 – LIGHTNING PROTECTION

PART 1 - GENERAL

1.1 SUMMARY

A. Section Includes:
1. Lightning Protection System for Buildings and Associated Structures

B. Related Sections:
1. Drawings and general provisions of the Contract, including General and Supplementary Conditions, Division 1 Specification Sections, section 260100 - General Electrical Requirements, and section 260500 - Basic Electrical Materials and Methods shall apply to this Section.

1.2 SYSTEM DESCRIPTION

A. Lightning Protection System to protect entire building. Provide under alternate bid/pricing.

1.3 SUBMITTALS

A. Product Data:
1. Submit “Letter of Conformance” in accordance with Section 01 33 00 (01330) indicating specified items selected for use in project.

B. Product Data for each component specified. Include the following:

C. Shop Drawings detailing lightning protection system. Include air terminal locations, conductor routing and connections, and bonding and grounding provisions. Include indications for use of raceway and data on how concealment requirements will be met.

D. Qualification data for firms and persons specified in "Quality Assurance" Article to demonstrate their capabilities and experience. Include data on listing or certification by nationally recognized testing laboratory (NRTL) or trade association. Include lists of completed projects with project names and addresses, names and addresses of owner's representative and owners, and other information specified.

E. Certification, signed by Contractor, that roof adhesive for air terminals is approved by manufacturers of both the terminal assembly and the single-ply membrane roofing material.

F. Field inspection reports indicating compliance with specified requirements.

1.4 QUALITY ASSURANCE

A. Installer Qualifications: Engage an experienced installer who is NRTL listed or who is certified by the Lightning Protection Institute as a Master Installer/Designer.

B. Listing and Labeling: Provide products specified in this Section that are listed and labeled.
1. The Terms "Listed" and "Labeled": As defined in the National Electrical Code, Article 100.
2. Listing and Labeling Agency Qualifications: A "Nationally Recognized Testing Laboratory" (NRTL) as defined in OSHA Regulation 1910.7.

C. Provide UL Master Label.

CJD Engineering LLC 2225 W. Chesterfield Blvd. Ste. 200 Springfield, MO 65807 (417) 877-1700 Fax: (417) 324-7735

1.5 SEQUENCING AND SCHEDULING

A. Coordinate installation of lightning protection with installation of other building systems and components, including electrical wiring, supporting structures and building materials, metal bodies requiring bonding to lightning protection components, and building finishes.

PART 2 - PRODUCTS

2.1 MANUFACTURERS

A. Approved Manufacturers:

B. A-C Lightning Security, Inc. (800-821-5575)

C. Approved Lightning Protection Co., Inc. (631-643-6327)

D. Harger Lightning Protection, Inc. (800-842-7437)

E. Heary Bros. Lightning Protection Co. (800-421-6141)

F. Independent Protection Co., Inc. (800-860-8388)

G. Robbins Lightning, Inc. (800-426-3792)

H. Thompson Lightning Protection Co. (651-455-7661)

I. West Dodd Lightning Conductor Corp. (219-533-5370)

2.2 LIGHTNING PROTECTION SYSTEM COMPONENTS

A. Comply with UL 96.

B. System Materials: Copper, with solid air terminals, except as otherwise indicated.

C. Air Terminals for Single-Ply Membrane Roof Mounting: Units with bases especially designed for single-ply membrane roof materials.

D. Air Terminal Decorations: Decorative ball, direction vane, and compass set where indicated.

E. Air Terminals for Main Stack: Stainless steel.

F. Ground Rods: Copper-clad steel with a minimum of 27 percent of rod weight in copper cladding.
   1. Diameter: 3/4 inch
   2. Length: 10 feet

PART 3 - EXECUTION

3.1 EXAMINATION

A. Examine surfaces, areas, and conditions, with Installer present, for compliance with installation tolerances and other conditions affecting performance of lightning protection. Do not proceed with installation until unsatisfactory conditions have been corrected.

CJD Engineering LLC 2225 W. Chesterfield Blvd. Ste. 200 Springfield, MO 65807 (417) 877-1700 Fax: (417) 324-7735

3.2 INSTALLATION

A. Install lightning protection as indicated, according to manufacturer's written instructions.

B. Comply with UL 96A and LPI-175.

C. Conform to the most stringent requirements when more than one standard is specified.

D. Install conductors with direct paths from air terminals to ground connections. Avoid sharp bends and narrow loops. Where indicated, run conductors in nonmetallic raceway, Schedule 40, minimum.

E. Conceal system conductors.

F. Conceal down conductors.

G. Conceal interior conductors.

H. Provide notification to Owner's Representative a minimum of 48 hours prior to concealing lightning protection components.

I. Cable Connections: Use approved exothermic-welded connections for all conductor splices and connections between conductors and other components except those above single-ply membrane roofing.

J. Air Terminals on Single-Ply Membrane Roofing: Comply with adhesive manufacturer's installation instructions.

K. Bond extremities of vertical metal bodies exceeding 60 feet in length to lightning protection components.

L. Bond ground terminals to counterpoise conductor.

M. Bond grounded metal bodies on building within 12 feet of ground to counterpoise conductor.

N. Bond grounded metal bodies on building within 12 feet of roof to counterpoise conductor.

O. Bond lightning protection components to grounded metal bodies on building at every 60 feet with intermediate-level interconnection loop conductors.

3.3 CORROSION PROTECTION

A. Do not combine materials that can form an electrolytic couple that will accelerate corrosion in the presence of moisture, unless moisture is permanently excluded from the junction of such materials.

B. Use conductors with protective coatings where conditions would cause deterioration or corrosion of conductors.

3.4 FIELD QUALITY CONTROL

A. Periodic Inspections: Provide the services of a qualified inspector to perform periodic inspections during construction and at its completion, according to LPI-177.

B. UL Inspection: Apply for inspection by UL as required for UL master labeling of system.

END OF SECTION 264113

CJD Engineering LLC 2225 W. Chesterfield Blvd. Ste. 200 Springfield, MO 65807 (417) 877-1700 Fax: (417) 324-7735

SECTION 264420 - PANELBOARDS

PART 1 - GENERAL

1.1 RELATED DOCUMENTS

A. Drawings and general provisions of the Contract, including General and Supplementary Conditions, Division 1 Specification Sections, section 260100 - General Electrical Requirements, and section 260500 - Basic Electrical Materials and Methods shall apply to this Section.

1.2 SECTION INCLUDES

A. Lighting and Appliance Panelboard - Furnish and install lighting and appliance panelboard(s) as specified herein and where shown on the associated schedules on the construction drawings.

1.3 REFERENCES

A. The panelboard(s) and circuit breaker(s) referenced herein are designed and manufactured according to the latest revision of the following specifications.
1. NEMA PB 1 - Panelboards
2. NEMA PB 1.1 - Instructions for Safe Installation, Operation and Maintenance of Panelboards Rated 600 Volts or Less.
3. NEMA AB 1 - Molded Case Circuit Breakers
4. UL 50 - Enclosures for Electrical Equipment
5. UL 67 – Panelboards
6. UL 489 - Molded-Case Circuit Breakers and Circuit Breaker Enclosures
7. CSA Standard C22.2 No. 29-M1989 - Panelboards and Enclosed Panelboards
8. CSA Standard C22.2 No. 5-M91 - Molded Case Circuit Breakers
9. Federal Specification W-P-115C - Type I Class 1
10. Federal Specification W-C-375B/Gen - Circuit Breakers, Molded Case, Branch Circuit And Service.
11. NFPA 70 - National Electrical Code (NEC)
12. ASTM - American Society of Testing Materials

1.4 SUBMITTAL AND RECORD DOCUMENTATION

A. Approval documents shall include drawings. Drawings shall contain overall panelboard dimensions, interior mounting dimensions, and wiring gutter dimensions. The location of the main, branches, and solid neutral shall be clearly shown. In addition, the drawing shall illustrate one line diagrams with applicable voltage systems.

1.5 QUALIFICATIONS

A. Company specializing in manufacturing of panelboard products with a minimum of fifty (50) years documented experience.

1.6 DELIVERY, STORAGE, AND HANDLING

A. Inspect and report concealed damage to carrier within their required time period.

B. Handle carefully to avoid damage to panelboard internal components, enclosure, and finish.

CJD Engineering LLC 2225 W. Chesterfield Blvd., Suite. 200 Springfield, MO 65807 (417) 877-1700 Fax: (417) 324-7735

C. Store in a clean, dry environment. Maintain factory packaging and, if required, provide an additional heavy canvas or heavy plastic cover to protect enclosure(s) from dirt, water, construction debris, and traffic.

1.7 OPERATIONS AND MAINTENANCE MATERIALS

A. Manufacturer shall provide installation instructions and NEMA Standards Publication PB 1.1 - Instructions for Safe Installation, Operation and Maintenance of Panelboards Rated 600 Volts or Less.

1.8 WARRANTY

A. Manufacturer shall warrant specified equipment free from defects in materials and workmanship for the lesser of one (1) year from the date of installation or eighteen (18) months from the date of purchase.

PART 2 - PRODUCTS

2.1 MANUFACTURERS

A. Shall be Square D Company

B. Equivalent by Eaton, General Electric and Seimens.

2.2 POWER DISTRIBUTION PANELBOARDS

A. I-LINE Circuit Breaker Distribution Panelboard
1. Interior
a. Shall be Square D I-LINE type rated 600 Vac or 250 Vdc maximum. Continuous main current ratings as indicated on associated schedules on the construction drawings.not to exceed 1200 amperes maximum. Panelboard bus current ratings shall be determined by heat-rise tests conducted in accordance with UL 67.
b. Provide UL Listed short circuit current ratings (SCCR) as indicated on the associated schedules on the construction drawings not to exceed the lowest interrupting capacity rating of any circuit breaker installed with a maximum of 200,000 RMS symmetrical amperes. Main lug and main breaker panelboards shall be suitable for use as Service Equipment when application requirements comply with UL 67 and NEC Articles 230.VI and VII.
c. The panelboard interior shall have three flat bus bars stacked and aligned vertically with glass reinforced polyester insulators laminated between phases. The molded polyester insulators shall support and provide phase isolation to the entire length of bus.
d. The bussing shall be fully rated with sequentially phased branch distribution. Panelboard bussing rated 100 through 600 amperes shall be plated copper. Bussing rated 800 amperes and above shall be plated copper. Bus bar plating shall run the entire length of the bus bar. The entire interleaved assembly shall be contained between two (2) U-shaped steel channels, permanently secured to a galvanized steel-mounting pan by fasteners.
e. Interior trim shall be of dead-front construction to shield user from all energized parts. Main circuit breakers through 800 amperes shall be vertically mounted. Main circuit breaker and main lug interiors shall be field convertible for top or bottom incoming feed.
f. A solidly bonded copper equipment ground bar shall be provided.
g. Solid neutral shall be equipped with a full capacity bonding strap for service entrance applications. Gutter-mounted neutral will not be acceptable.

CJD Engineering LLC 2225 W. Chesterfield Blvd., Suite. 200 Springfield, MO 65807 (417) 877-1700 Fax: (417) 324-7735

h. Nameplates shall contain system information and catalog number or factory order number. Interior wiring diagram, neutral wiring diagram, UL Listed label, and Short Circuit Current Rating shall be displayed on the interior or in a booklet format. Leveling provisions shall be provided for flush mounted applications.

2. Group mounted circuit breakers through 1200A
   a. Circuit breaker(s) shall be group mounted plug-on with mechanical restraint on a common pan or rail assembly.
   b. The interior shall have three flat bus bars stacked and aligned vertically with glass reinforced polyester insulators laminated between phases. The molded polyester insulators shall support and provide phase isolation to the entire length of bus.
   c. Circuit breakers equipped with line terminal jaws shall not require additional external mounting hardware. Circuit breakers shall be held in mounted position by a self-contained bracket secured to the mounting pan by fasteners. Circuit breakers of different frame sizes shall be capable of being mounted across from each other.
   d. Line-side circuit breaker connections are to be jaw type.
   e. All unused spaces provided, unless otherwise specified, shall be fully equipped for future devices, including all appropriate connectors and mounting hardware.
3. Thermal magnetic molded case circuit breakers
   a. Molded case circuit breakers shall have integral thermal and instantaneous magnetic trip in each pole.
   b. Circuit protective devices shall be Square D molded case circuit breakers. Circuit breakers shall be standard interrupting. Ampere ratings shall be as shown on the drawings. Manufacturer shall submit one set of published Ip and I^2t let-through curves (as required by UL) to the owner.
4. Enclosures
   a. Type 1 Boxes
      1) Boxes shall be galvanized steel constructed in accordance with UL 50 requirements. Zinc-coated galvannealed steel will not be acceptable.
      2) Boxes shall have removable blank end walls and interior mounting studs. Interior support bracket shall be provided for ease of interior installation.
      3) Maximum enclosure dimensions shall be 44” wide and 9.5” deep.

   b. Type 1 Trim Fronts
      1) Trim front steel shall meet strength and rigidity requirements per UL 50 standards. Shall have an ANSI 49 medium gray enamel electrodeposited over cleaned phosphatized steel.
      2) Trim front shall be hinged 1-piece with door available in surface mount. Trim front door shall have rounded corners and edges free of burrs. A clear plastic directory cardholder shall be mounted on the inside of the door.
      3) Locks shall be cylindrical tumbler type with larger enclosures requiring sliding vault locks with 3-point latching. All lock assemblies shall be keyed alike. One (1) key shall be provided with each lock.

2.3 LIGHTING AND APPLIANCE PANELBOARD TYPE

A. NQ
   1. Interior
      a. Shall be type NQ panelboard rated for 240 Vac/48 Vdc maximum. Continuous main current ratings, as indicated on associated schedules on the construction drawings. not to exceed 600 amperes maximum.
      b. Minimum short circuit current rating: as indicated in schedules on the construction drawings.

CJD Engineering LLC 2225 W. Chesterfield Blvd., Suite. 200 Springfield, MO 65807 (417) 877-1700 Fax: (417) 324-7735

c. Short circuit current rating: [5,000] at 48 Vdc.
d. Provide one (1) continuous bus bar per phase. Each bus bar shall have sequentially phased branch circuit connectors suitable for plug-on or bolt-on branch circuit breakers. The bussing shall be fully rated. Panelboard bus current ratings shall be determined by heat-rise tests conducted in accordance with UL 67. Bussing rated 100-400 amperes shall be plated copper. Bussing rated for 600 amperes shall be plated copper as standard construction. Bus bar plating shall run the entire length of the bus bar. Panelboards shall be suitable for use as Service Equipment when application requirements comply with UL 67 and NEC Articles 230-F and -G.
e. All current-carrying parts shall be insulated from ground and phase-to-phase by high dielectric strength thermoplastic.
f. A solidly bonded copper equipment ground bar shall be provided.
g. Split solid neutral shall be plated and located in the mains compartment up to 225 amperes so all incoming neutral cable may be of the same length.
h. Interior trim shall be of dead-front construction to shield user from energized parts. Dead-front trim shall have pre-formed twistouts covering unused mounting space.
i. Nameplates shall contain system information and catalog number or factory order number. Interior wiring diagram, neutral wiring diagram, UL Listed label and short circuit current rating shall be displayed on the interior or in a booklet format.
j. Interiors shall be field convertible for top or bottom incoming feed. Main circuit breakers in 100A interiors shall be vertically mounted. Main circuit breakers over 100A shall be vertically mounted. Sub-feed circuit breakers shall be vertically mounted. Main lug interiors up to 400 amperes shall be field convertible to main breaker. Interior leveling provisions shall be provided for flush mounted applications.

2. Main Circuit Breaker
   a. Shall be Square D type circuit breakers.
   b. Main circuit breakers shall have an overcenter, trip-free, toggle mechanism which will provide quick-make, quick-break contact action. Circuit breakers shall have a permanent trip unit with thermal and magnetic trip elements in each pole. Each thermal element shall be true rms sensing and be factory calibrated to operate in a 40° C ambient environment. Thermal elements shall be ambient compensating above 40° C.
   c. Two- and three-pole circuit breakers shall have common tripping of all poles. Circuit breakers frame sizes above 100 amperes shall have a single magnetic trip adjustment located on the front of the circuit breaker that allows the user to simultaneously select the desired trip level of all poles. Circuit breakers shall have a push-to-trip button for maintenance and testing purposes.
   d. Breaker handle and faceplate shall indicate rated ampacity. Standard construction circuit breakers shall be UL Listed for reverse connection without restrictive line or load markings.
   e. Circuit breaker escutcheon shall have international I/O markings, in addition to standard ON/OFF markings. Circuit breaker handle accessories shall provide provisions for locking handle in the ON or OFF position.
   f. Lugs shall be UL Listed to accept solid or stranded copper conductors only. Lugs shall be suitable for 75° C rated wire sized according to the 75° C temperature rating per NEC Table 310-16. Lug body shall be bolted in place; snap-in designs are not acceptable.
   g. The circuit breakers shall be UL Listed for use with the following accessories: Shunt Trip, Under Voltage Trip, Ground Fault Shunt Trip, Auxiliary Switch, Alarm Switch, Mechanical Lug Kits, and Compression Lug Kits.
3. Branch Circuit Breakers
   a. Shall be Square D type circuit breakers. Circuit breakers shall be UL Listed with amperage ratings, interrupting ratings, and number of poles as indicated on the associated schedules on the construction drawings.

CJD Engineering LLC 2225 W. Chesterfield Blvd., Suite. 200 Springfield, MO 65807 (417) 877-1700 Fax: (417) 324-7735

b. Molded case branch circuit breakers shall have bolt-on type bus connectors.
c. Circuit breakers shall have an overcenter toggle mechanism which will provide quick-make, quick-break contact action. Circuit breakers shall have thermal and magnetic trip elements in each pole. Two- and three-pole circuit breakers shall have common tripping of all poles.
d. There shall be two forms of visible trip indication. The breaker handle shall reside in a position between ON and OFF. In addition, there shall be a red VISI-TRIP® indicator appearing in the clear window of the circuit breaker housing.
e. The exposed faceplates of all branch circuit breakers shall be flush with one another.
f. Lugs shall be UL Listed to accept solid or stranded copper copper conductors only. Lugs shall be suitable for 75° C rated wire, sized according to the 75° C temperature rating per NEC Table 310-16. Branch circuit breakers rated 30 amperes and below shall be UL Listed to accept 60° C rated wire.
g. Breakers shall be UL Listed for use with the following factory installed accessories: Shunt Trip, Auxiliary Switch, and Alarm Switch.

4. Enclosures
a. Type 1 Boxes
1) Boxes shall be galvanized steel constructed in accordance with UL 50 requirements. Galvannealed steel will not be acceptable.
2) Boxes shall have removable endwalls with knockouts located on one end. Boxes shall have welded interior mounting studs. Interior mounting brackets are not required.
3) Box width shall be 26” wide maximum wide.
b. Type 1 Fronts
1) Front shall meet strength and rigidity requirements per UL 50 standards. Front shall have ANSI 49 gray enamel electrodeposited over cleaned phosphatized steel.
2) Fronts shall be hinged 1-piece with door. Mounting shall be as indicated on drawings and associated schedules.
3) Panelboards shall have MONO-FLAT fronts with concealed door hinges and mounted with trim screws. Front shall not be removable with the door locked. Doors on front shall have rounded corners and edges shall be free of burrs.
4) Front shall have cylindrical tumbler type lock with catch and spring-loaded stainless steel door pull. All lock assemblies shall be keyed alike. One (1) key shall be provided with each lock. A clear plastic directory cardholder shall be mounted on the inside of door.
c. Type 3R, 5, and 12
1) Enclosures shall be constructed in accordance with UL 50 requirements. Enclosures shall be painted with ANSI 49 gray enamel electrodeposited over cleaned phosphatized steel.
2) All doors shall be gasketed and equipped with a tumbler type vault lock and two (2) additional quarter turn fasteners on enclosures 59 inches or more in height. All lock assemblies shall be keyed alike. One (1) key shall be provided with each lock. A clear plastic directory cardholder shall be mounted on the inside of door.
3) Maximum enclosure dimensions shall not exceed 21” wide and 6.5” deep.

B. NF
1. Interior
a. Shall be type NF panelboard for 480Y/277 Vac maximum. Continuous main current ratings, as indicated on associated schedules and drawings, not to exceed 600 amperes maximum for main breaker panelboards and not to exceed 800 amperes for main lug panelboards.
b. Minimum Short Circuit Rating as listed on schedule at 480Y/277 Vac.

CJD Engineering LLC 2225 W. Chesterfield Blvd., Suite. 200 Springfield, MO 65807 (417) 877-1700 Fax: (417) 324-7735

c. Provide one (1) continuous bus bar per phase. Each bus bar shall have sequentially phased branch circuit connectors limited to bolt-on branch circuit breakers. The bussing shall be fully rated. Panelboard bus current ratings shall be determined by heat-rise tests conducted in accordance with UL 67. Bussing rated 100-400 amperes shall be plated [copper] [aluminum]. Bussing rated for 600 and 800 amperes shall be plated copper as standard construction. Bus bar plating shall run the entire length of the bus bar. Panelboards shall be suitable for use as Service Equipment when application requirements comply with UL 67 and NEC Articles 230-F and -G.

d. All current-carrying parts shall be insulated from ground and phase-to-phase by high dielectric strength thermoplastic.

e. A solidly bonded copper equipment ground bar shall be provided.

f. Split solid neutral shall be plated and located in the mains compartment up to 250 amperes so all incoming neutral cable may be of the same length.

g. Interior trim shall be of dead-front construction to shield user from energized parts. Dead-front trim shall have pre-formed twistouts covering unused mounting space.

h. Nameplates shall contain system information and catalog number or factory order number. Interior wiring diagram, neutral wiring diagram, UL Listed label and short circuit current rating shall be displayed on the interior or in a booklet format.

i. Interiors shall be field convertible for top or bottom incoming feed. Main circuit breakers in 125A interiors shall be vertically mounted. Main circuit breakers over 125A shall be vertically mounted. Sub-feed circuit breakers shall be vertically mounted. Main lug interiors up to 400 amperes shall be field convertible to main breaker. Interior leveling provisions shall be provided for flush mounted applications.

j. Interior phase bus shall be pre-drilled to accommodate field installable options. (i.e., Sub-Feed Lugs, Sub-Feed Breakers, Thru-Feed Lugs)

k. Interiors shall accept 125 ampere breakers in group mounted branch construction.

2. Main Circuit Breaker

a. Shall be Square D type circuit breakers.

b. Main circuit breakers shall have an overcenter, trip-free, toggle mechanism which will provide quick-make, quick-break contact action. Circuit breakers shall have a permanent trip unit with thermal and magnetic trip elements in each pole. Each thermal element shall be true rms sensing and be factory calibrated to operate in a 40° C ambient environment. Thermal elements shall be ambient compensating above 40° C.

c. Two- and three-pole circuit breakers shall have common tripping of all poles. Circuit breakers frame sizes above 100 amperes shall have a single magnetic trip adjustment located on the front of the breaker that allows the user to simultaneously select the desired trip level of all poles. Circuit breakers shall have a push-to-trip button for maintenance and testing purposes.

d. Circuit breaker handle and faceplate shall indicate rated ampacity. Standard construction circuit breakers shall be UL Listed for reverse connection without restrictive line or load markings.

e. Circuit breaker escutcheon shall have international I/O markings, in addition to standard ON/OFF markings. Circuit breaker handle accessories shall provide provisions for locking handle in the ON or OFF position.

f. Lugs shall be UL Listed to accept solid or stranded copper conductors only. Lugs shall be suitable for 75° C rated wire. Lug body shall be bolted in place; snap-in designs are not acceptable.

g. The circuit breakers shall be UL Listed for use with the following accessories: Shunt Trip, Under Voltage Trip, Ground Fault Shunt Trip, Auxiliary Switch, Alarm Switch, Mechanical Lug Kits, and Compression Lug Kits.

3. Branch Circuit Breakers

CJD Engineering LLC 2225 W. Chesterfield Blvd., Suite. 200 Springfield, MO 65807 (417) 877-1700 Fax: (417) 324-7735

a. Shall be Square D type circuit breakers. Circuit breakers shall be UL Listed with amperage ratings, interrupting ratings, and number of poles as indicated on the panelboard schedules.
b. Molded case branch circuit breakers shall have bolt-on type bus connectors.
c. Circuit breakers shall have an overcenter toggle mechanism which will provide quick-make, quick-break contact action. Circuit breakers shall have thermal and magnetic trip elements in each pole. Two- and three-pole circuit breakers shall have common tripping of all poles.
d. There shall be two forms of visible trip indication. The circuit breaker handle shall reside in a position between ON and OFF. In addition, there shall be a red VISI-TRIP® indicator appearing in the clear window of the circuit breaker housing.
e. The exposed faceplates of all branch circuit breakers shall be flush with one another.
f. Lugs shall be UL Listed to accept solid or stranded copper conductors only. Lugs shall be suitable for 75° C rated wire.
g. Breakers shall be UL Listed for use with the following factory installed accessories: Shunt Trip, Auxiliary Switch, and Alarm Switch.
h. Breaker shall be UL Listed with the following ratings: (15-125A) Heating, Air Conditioning, and Refrigeration (HACR), (15-30A) High Intensity Discharge (HID), and (15-20A) Switch Duty (SWD)

4. Enclosures
   a. Type 1 Boxes
      1) Boxes shall be galvanized steel constructed in accordance with UL 50 requirements. Galvannealed steel will not be acceptable.
      2) Boxes shall have removable endwalls with knockouts located on one end. Boxes shall have welded interior mounting studs. Interior mounting brackets are not required.
      3) Box width shall not exceed 26” wide.
   b. Type 1 Fronts
      1) Front shall meet strength and rigidity requirements per UL 50 standards. Shall have ANSI 49 gray enamel electrodeposited over cleaned phosphatized steel.
      2) Fronts shall be 1-piece with door. Mounting shall be as indicated on associated schedules/drawings.
      3) Panelboards rated 250 amperes and below shall have MONO-FLAT fronts with concealed door hinges and trim screws. Front shall not be removable with the door locked. Panelboards rated above 250 amperes shall have vented fronts with concealed door hinges. Doors on front shall have rounded corners; edges shall be free of burrs.
      4) Front shall have flat latch type lock with catch and spring loaded stainless steel door pull. All lock assemblies shall be keyed alike. One (1) key shall be provided with each lock. A clear plastic directory card holder shall be mounted on the inside of door.
   c. Type 3R, 5, and 12
      1) Enclosures shall be constructed in accordance with UL 50 requirements. Enclosures shall be painted with ANSI 49 gray enamel electrodeposited over cleaned phosphatized steel.
      2) All doors shall be gasketed and equipped with a tumbler type vault lock and two (2) additional quarter turn fasteners on enclosures 59 inches or more in height. All lock assemblies shall be keyed alike. One (1) key shall be provided with each lock. A clear plastic directory card holder shall be mounted on the inside of door.
      3) Maximum enclosure dimensions shall not exceed 21” wide and 9.5” deep.

PART 3 - EXECUTION

CJD Engineering LLC 2225 W. Chesterfield Blvd., Suite. 200 Springfield, MO 65807 (417) 877-1700 Fax: (417) 324-7735

3.1 INSTALLATION

A. Install panelboards in accordance with manufacturer's written instructions, NEMA PB 1.1 and NEC standards.
B. Mounting hieght shall be in accordance of NEC standards.

3.2 FIELD QUALITY CONTROL

A. Inspect complete installation for physical damage, proper alignment, anchorage, and grounding.

B. Measure steady state load currents at each panelboard feeder; rearrange circuits in the panelboard to balance the phase loads within 20% of each other. Maintain proper phasing for multi-wire branch circuits.

C. Check tightness of bolted connections and circuit breaker connections using calibrated torque wrench or torque screwdriver per manufacturer's written specifications.

END OF SECTION 264420

CJD Engineering LLC 2225 W. Chesterfield Blvd., Suite. 200 Springfield, MO 65807 (417) 877-1700 Fax: (417) 324-7735

264430 MOTOR STARTERS AND CONTROLLERS

PART 1 – GENERAL

1.1 RELATED DOCUMENTS

A. Drawings and general provisions of the Contract, including General and Supplementary Conditions, Division 1 Specification Sections, section 260100 - General Electrical Requirements, and section 260500 - Basic Electrical Materials and Methods shall apply to this Section.

PART 2 – PRODUCTS

2.1 MAGNETIC MOTOR STARTER:

A. Provide 600 volt, 60 hertz AC across-the-line magnetic type rated in accordance with NEMA Standards and listed and labeled in accordance with UL Standard 508 Eleventh Edition

B. Enclosures shall be NEMA type required by starter location and environment.

C. Starter shall have permanently affixed to inside of enclosure cover in easy to read wiring diagram including alternate control variations and also a warning sign indicating maximum current limiting fuses size that may be in disconnect switch which will limit fault current to starters withstand rating with 100,000 RMS fault current available at disconnect switch.

D. Starter contacts shall be silver alloy double break replacement without removal of power wiring or starter from enclosure.

E. Provide starter with melting alloy type overload relays on all phases. Overload thermal unit shall be one piece interchangeable construction non- adjustable. Starter shall be inoperative with thermal unit removed. Starters shall not be furnished to E/C with jumper straps in overload units.

F. Thermal units ampere rating for overload relays shall be selected by multiplying motor nameplate running amperes at connected voltage by .90 for motors with 1 .0 service factor and by .95 for motors with 1 .15 service factor. Use resulting amperes to enter manufacturer's overload selection tables.

G. Provide starter with internal wiring and control circuits prewired with only line, load, and external control circuit wiring connections required. When starter voltage exceeds 120 volts, provide 120 volt control circuit transformer with Fusetron Dual Element Fuses in transformer primary.

H. Starter shall be suitable for additional of at least four electrical interlocks of any arrangement of normally open or closed contacts.

I. Provide starter with accessories such as auxiliary contacts, pilot lights, start-stop, or H.O.A. switches as required to obtain control sequence shown on drawings or specified. Accessories shall be available as kit for field installation or modification.

J. Starter applications requiring disconnect switch at starter shall be combination type motor starters in lieu of separate devices. Where four or more starters are installed at one location starter and disconnect means shall be installed in group control panels in lieu of separate devices.

CJD Engineering LLC 2225 W. Chesterfield Blvd., Suite. 200 Springfield, MO 65807 (417) 877-1700 Fax: (417) 324-7735

K. Provide magnetic starters by Allen Bradley, Cutler-Hammer, Furnas, Challenger, “Square "D", or General Electric.

L. See Schedule.

2.2 COMBINATION MAGNETIC MOTOR STARTERS:

A. Provide 600 volt, 60 hertz ZC across-the-line fusible magnetic type rated in accordance with NEMA Standards and listed and labeled in accordance with UL Standard 508 Eleventh Edition.

B. Starter NEMA enclosure type shall be type required for starter location and environment.

C. Disconnect switch and magnetic starter shall meet requirements of Articles 16B-15 and 16B-16 of this specification.

D. Combination starter shall be a factory assembled unit with internal wiring and control circuits prewired with only line, load, and external control circuit wiring connections required.

E. Provide combination starter by Allen-Bradley, Cutler Hammer, Furnas, Challenger or Square "D".

F. See Schedule.

2.3 MANUAL MOTOR CONTROL:

A. Provide 300 volt, 60 cycle, AC manually operated motor starting switch meeting current NEMA Standards with proper NEIVIA enclosure required by starter location and environment.

B. Starter shall have heavy silver alloy contacts with quick-break mechanism manually operated by toggle switch.

C. Thermal unit shall be melting alloy type, resetable, one piece interchangeable construction.

D. Provide starter with all accessories such as pilot light, H.O.A. or two speed switches required to provide control sequence shown on drawings or specified. Selector switches contacts shall have same ampere rating as starter switch.

E. Provide starter by Allen-Bradley, Cutler Hammer, Furnas, Challenger or Square "D" or General Electric.

PART 3 – EXECUTION (NOT APPLICABLE)

END OF SECTION 264430

SECTION 265110 - LIGHTING FIXTURES

PART 1 - GENERAL

1.1 RELATED DOCUMENTS

A. Drawings and general provisions of the Contract, including General and Supplementary Conditions, Division 1 Specification Sections, section 260100 - General Electrical Requirements, and section 260500 - Basic Electrical Materials and Methods shall apply to this Section.

PART 2 - PRODUCTS

2.1 LIGHTING FIXTURES

A. Unless scheduled otherwise, all lighting fixtures shall be dedicated LED type. Fixtures shall not be incandescent or fluorescent type with conversion LED lamping.

B. Provide lighting fixtures with consistent color temperature rating. Where color temperature rating is not clear or is scheduled as inconsistent, contact Engineer for direction.

C. Provide fixtures complete with lamps and accessories required for recessed, pendant, or surface installation, as applicable. Provide lighting fixtures with all accessories and components required for complete installation. Coordinate installation detailing with adjacent construction and finishes; adjust trim or accessory detailing as required.

D. All light fixture installations in fire rated ceilings shall comply with U.L. listing for rated assembly.

E. See **LIGHTING FIXTURE SCHEDULE** on the drawings.

F. Lighting fixture manufacturers shall be only as specified or listed as equivalent. Alternate manufacturers shall submit for approval no less than 10 days prior to bid date and must be listed as approved by Addendum.

G. Where scheduled, provide emergency lighting fixtures with U.L. battery backup.

PART 3 - EXECUTION

3.1 Provide submittals indicating the manufacturer, model number for all fixtures proposed to be provided. Submittals shall list all accessories and components necessary for complete installation.

3.2 E/C shall insure that lamps, reflectors, lens, and trim are clean at time of final inspection.

3.3 Provide recessed fixtures with trim flush to ceilings or other construction assemblies, free of gaps or cracks. Field coordinate thicknesses and detailing of associated assemblies.

3.4 Coordinate mounting of ceiling mounted lighting fixtures with G/C. Where additional ceiling or fixture supports are required due to fixture location or weight they shall be provided by E/C, unless otherwise specified under ceiling specifications.

3.5 Consult Architectural plans for ceiling types and provide recessed fixtures and mounting components accordingly.

CJD Engineering LLC 2225 W. Chesterfield Blvd., Suite. 200 Springfield, MO 65807 (417) 877-1700 Fax: (417) 324-7735

3.6 Fixture supports shall comply with applicable version of N.E.C. Provide fixture securing clips as required.

END OF SECTION 265110

CJD Engineering LLC 2225 W. Chesterfield Blvd., Suite. 200 Springfield, MO 65807 (417) 877-1700 Fax: (417) 324-7735

SECTION 266110 – DATA AND COMMUNICATIONS

PART I - GENERAL

I.I SECTION INCLUDES

A. Horizontal (distribution) communications wiring and connecting hardware from Telecommunications Room (TR) to Telecommunication Outlets (TO).

1.2 RELATED REQUIREMENTS

~~A. Section 27 05 26 – Grounding and Bonding for Communications Systems.~~
~~B. Section 27 05 28 – Pathways for Communications Systems.~~
~~C. Section 27 10 00 – Structured Cabling.~~
~~D. Section 27 11 00 – Communications Equipment Room Fittings.~~
~~E. Section 27 13 00 – Communications Backbone Cabling.~~
~~F. Section 27 16 00 – Communications Connecting Cords, Devices, and Adapters.~~

1.3 REFERENCE STANDARDS

A. ANSI/TIA-492.AAAC-B – Detail Specification for 850-nm Laser-Optimized, 50-um Core Diameter/125-um Cladding Diameter Class 1a Graded-index Multimode Optical Fibers (OM3/OM4). Current Edition
B. ANSI TIA-492.CAAB – Detail Specification for Class Iva Dispersion-Unshifted Single-Mode Optical Fibers with Low Water Peak. Current Edition
C. ANSI/TIA 526 – OFSTP-19 Optical Signal-to-Noise Ratio Measurement Procedures for Dense Wavelength-Division Multiplexed Systems.
D. ASI/TIA-568-C.0 – Generic Communications Cabling for Customer Premises.
E. ANSI/TIA-568-C.1 – Commercial Building Communications Cabling Standard Part 1: General Requirements.
F. ANSI/TIA 568-C.2 – Balanced Twisted-Pair Telecommunications Cabling and Components Standards
G. ANSI/TIA 568-C.3 – Optical Fiber Cabling Components Standard
H. ANSI/TIA-569-C – Commercial Building Standard for Telecommunications Pathways and Spaces.
I. ANSI/TIA-606-B – Administration Standard for the Commercial Telecommunications Infrastructure.
J. ANSI/JSTD-607-B – Commercial Building Bonding and Grounding (Earthing) Requirements for Telecommunications.
K. NFPA 70 – National Electrical Code (NEC).
L. BICSI – TDMM, Building Industries Consulting Services International, Telecommunications Distribution Methods Manual (TDMM)

1.4 PRE-INSTALLATION MEETINGS

A. Convene pre-installation meeting 2 weeks before start of installation of communications horizontal cabling.
B. Require attendance of parties directly affecting work of this section.
C. Review materials, installation, field quality control, labeling, protection, and coordination with other work.

1.5 SUBMITTALS

A. Comply with Section 01 33 00 – Submittal Procedures.
B. Product Data: Submit manufacturer's product data sheets, including installation instructions verifying that materials comply with specified requirements and are suitable for intended application.

CJD Engineering LLC 2225 W. Chesterfield Blvd., Suite. 200 Springfield, MO 65807 (417) 877-1700 Fax: (417) 324-7735

C. Installer's Project References: Submit installer's list of successfully completed communications horizontal cabling projects, including project name and location, name of architect, and type and quantity of communications horizontal cabling installed.

1.6 QUALITY ASSURANCE

A. Manufacturer's Qualifications: Manufacturer regularly engaged, for past 10 years, in manufacture of communications horizontal cabling of similar type to that specified.

1.7 DELIVERY, STORAGE, AND HANDLING

A. Delivery and Acceptance Requirements: Deliver materials to site in manufacturer's original, unopened containers and packaging, with labels clearly identifying product name and manufacturer.

B. Storage and Handling Requirements:
   1. Store and handle materials in accordance with manufacturer's instructions.
   2. Keep materials in manufacturer's original, unopened containers and packaging until installation.
   3. Store materials in clean, dry area indoors.
   4. Protect materials during storage, handling, and installation to prevent damage.

1.8 WARRANTY

A. The horizontal communications cabling system installed shall be eligible for coverage by a Warranty offered either by the manufacture of the product or the winning integrator, to the end user.
   1. Horizontal channels shall be completed with Leviton Network Solutions factory-terminated copper and/or fiber optic patch cords.
   2. Approved product shall be listed on the most recent version of the applicable Berk-Tek Leviton Technologies data sheets for each Berk-Tek Leviton Technologies solution.

B. The installed structured cabling system shall provide a warranty guaranteeing installed channel performance above the ANSI/TIA 568-C requirements for Cat 5e, Cat 6, and/or Cat 6A cabling systems or ISO 11801 requirements for Cass D, Class E, and/or Class E_a.
   1. Standards-compliant channel or permanent link performance tests shall be performed in the field with a certified tester in the appropriate channel or permanent link test configuration. See 1.8 A.1 above for channel requirements.

C. Necessary documentation for warranty the Installer/Integrator is willing to offer shall be provided to the school district by the installer (within 10 days) following 100 percent testing of cables.
   1. Submit test results to the school district, in the certification tester's original software files.
   2. Installer shall ensure that the warranty is submitted to the school district, with all required documentation within 10 days of project completion.

PART 2 - PRODUCTS

2.1 MANUFACTURERS

A. Leviton Network Solutions, 2222 222nd Street SE, Bothell, Washington 98021. Phone 425-486-2222. Fax 425-485-3373. Website www.leviton.com.

Berk-Tek, A Nexans Company, 132 White Oak Road, New Holland, PA 17557 Phone: 717-354-6200. Fax 717-354-7944. Website www.berktek.com.

2.2 SYSTEM DESCRIPTION

A. Horizontal Distribution Subsystem: Intra-building twisted-pair and fiber optic communications cabling connecting Telecommunication Rooms (TRs) to Telecommunication Outlets (TOs) located at individual work areas.
B. Horizontal Cabling: Combination of the following types of cables from TR to TO:
   1. Category 6 (100-Ohm, 4-pair, unshielded twisted pair) cables from TRs to TOs
   2. 50/125 µm, optical fiber cables.
C. Communications Horizontal Cabling System: Includes cables, jacks, patch panels, connecting blocks, patch cords, fiber connectors, fiber adapter plates, fiber enclosures, jumpers, and necessary support systems, such as cable managers and faceplates.
D. Cables: Route through conduit, cable trays, spaces below raised floors, open ceiling areas, non-ventilated spaces above ceiling tile, and through plenum air-handling spaces above ceiling tile.
E. Please Provide a UPS for each Rack/Cabinet or appropriate size.
F. Racks/Cabinets laid out with a patch panel then switch alternating configuration.
G. Run 12 Strand Fiber to each IDF location from the MDF.
H. Furnish and install all materials necessary for a complete and working communications horizontal cabling system.

2.3 STATION CABLING

A. Category 6 Unshielded Twisted Pair: **CX6000 Cat 6 UTP System**.

   1. 100 ohm, Category 6, 24 AWG, 4-pair unshielded twisted pair, LANmark6, CMP rated.
      Color: Blue
      O.D.: 0.224”
      Part Number: 11074702 (1500’ Smartpak) 10136226 (1000’ Tekpak)

   2. 100 ohm, Category 6, 24 AWG, 4-pair unshielded twisted pair, LANmark6, CMR rated.
      Color: Blue
      O.D.: 0.280”
      Part Number: 11074703 (1500’ Smartpak) 10136339 (1000’ Tekpak)
   3. Channel margin guarantees for a **CX6000 Cat 6 UTP System** (margin vs. ANSI/TIA-568-C.2 and margin guarantees are for a standard 2-connector channel).
      a. Insertion Loss 2%
      b. NEXT 2 dB
      c. PSNEXT 2 dB
      d. ACR-F (ELFEXT) 2 dB
      e. PSACR-F (PSELFEXT) 2 dB
      f. Return Loss 2 dB
      g. ACR-N 2 dB
      h. PSACR-N 2 dB

B. Optical Fiber Cable. **OM2 Fiber Optic System.**

   1. Each Multimode Fiber shall be:
      a. Graded-index optical fiber wave-guide with nominal **50/125µm**-core/cladding diameter.
      b. The fiber shall comply with the latest revision of ANSI/EIA/TIA-492AAAA-A.
      c. Attenuation shall be measured in accordance with ANSI/EIA/TIA-455-78.
      d. Information transmission capacity shall be measured in accordance with the latest revision of ANSI/EIA/TIA-455-204.
      e. The measurements shall be performed at 23°C ± 5°C.

CJD Engineering LLC 2225 W. Chesterfield Blvd., Suite. 200 Springfield, MO 65807 (417) 877-1700 Fax: (417) 324-7735

f. Maximum attenuation dB/km @ 850/1300 nm: 3.5/1.0

2. Physical Characteristics:
   a. Shall be suitable for use in indoors or in indoor/outdoor applications.
   b. Appropriately flame rated optical cable shall be suitable for use in risers, plenums and horizontal applications.
   c. Plenum rated optical cables shall have and be marked with an UL-OFNP and OFN FT6 Flame Rating. Riser rated optical cables shall have and be marked with an UL-OFNR and OFN FT4 Flame Rating
   d. Shall comply with the requirements of ICEA S-83-596 (Premises), ICEA S-104-696 (I/O), or ANSI/ICEA S-87-640 (Outside Plant, OSP).
   e. Suitable for underground or aboveground conduits.
   f. Optical cables and fibers shall be color coded in accordance with EIA/TIA-598-C.
   g. Shall have a ripcord for overall jacket.

3. Design Make:
   a. **Berk-Tek Plenum optical fiber cable with OM2 50/125 micron fiber**
      PDR012CB3510/25 (012 optical fibers, Indoor Tight Buffer)

2.4 MODULAR JACKS AND FIBER ADAPTERS FOR WORKSTATION OUTLETS

A. Category 6 Modular Jacks: **CX6000 Cat 6 UTP System**, **CX6100 Cat 6 Enhanced UTP System**, or **CX6200 Cat 6 Premium UTP System**.

B. 8-position QuickPort modular jack, Category 6, IDC terminals, T568A/B wiring scheme.
   1. Component-rated jack.
   2. Each Jack: Identified on its face as CAT 6.
   3. Color: As designated below
   4. Part Number: Leviton 61110-RL6 (blue - data).
   5. Part Number: Leviton 61110-RO6 (orange - access points).
   6. Part Number: Leviton 61110-RW6 (white - phone).
   7. Part Number: Leviton 61110-RC6 (crimson - security cameras).
   8. Part Number: Leviton 61110-RE6 (black - printers).
   9. Part Number: Leviton 61110-RP6 (violet – MDF to IDF/IDF to IDF (Within 100m) connections)

2.5 WORK AREA OUTLETS

A. Flush-Mounted Plastic Faceplates:
   1. 4-port angled single-gang plastic wallplate with ID windows.
      a. Colors: Light Almond
      b. Part Number: Leviton 42081-4TS (Light Almond).
   2. Faceplate Colors: Coordinate with Architect to match finish.

B. Surface-Mounted Outlet Boxes:
   1. 1-port QuickPort surface-mount box, plastic, with ID window.
      a. Color: white
      b. Part Number: Leviton 41089-1WP (white).
   2. 2-port QuickPort surface-mount box, plastic, with ID window.
      a. Color: white
      b. Part Number: Leviton 41089-2WP (white).
   3. 4-port QuickPort surface-mount box, plastic, with ID window.
      a. Color: white

CJD Engineering LLC 2225 W. Chesterfield Blvd., Suite. 200 Springfield, MO 65807 (417) 877-1700 Fax: (417) 324-7735

b. Part Number: Leviton 41089-4WP (white).

4. 6-port QuickPort surface-mount box, plastic, with ID window.
   a. Color: white
   b. Part Number: Leviton 41089-6WP (white).
5. 12-port QuickPort surface-mount box, plastic, with ID window.
   a. Color: white
   b. Part Number: Leviton 41089-12W (white)
6. Surface Box Colors: part numbers shown are for white. Also available: Ivory, Grey, and Black. Coordinate with Architect to match finish.

2.6 RACKS/WALL MOUNT CABINETS

A. Hoffman brand of appropriate Height. Height to be determined by a total of RU's of patch panels + Switch per patch panel + any cable management + selected UPS + an extra 10 RU's. Depth should be 24".

2.7 PATCH PANELS

A. QuickPort-Style Patch Panels: **CX6100 Cat 6 Enhanced UTP System**.
   1. 48-port, 2RU, QuickPort, angled metal, recessed, patch panel, empty and support bar (Sold Separately).
      a. Patch Panel Part Number: Leviton 4W256-H48.
      b. Support Bar Part Number: Leviton 4W006-AMB

2.8 FIBER OPTIC TERMINATION ENCLOSURES and SPLICE TRAYS. Use for OM1 Fiber Optic System, OM2 Fiber Optic System, OM3 Fiber Optic System, OM4 Fiber Optic System, OM4+ Fiber Optic System, and OS2 Fiber Optic System

A. Opt-X 1000i Fiber Optic Enclosures: High-end features, all metal enclosure, rack mountable, holds various fiber adapter plates, splice trays, or MTP modules, based on connector choice and density requirements.
   1. 1RU Opt-X 1000i rack-mount Fiber Optic Enclosure, empty, with sliding tray.
      a. Capacity: 72 fiber strands (LC), 3 fiber adapter plates and 3 splice trays, or 3 MTP modules
      b. Part Number: Leviton 5R1UM-S03.

2.9 FIBER OPTIC ADAPTER PLATES

A. 50µm Multimode Adapter Plates, for **OM2 Fiber Optic System**
   1. 6-LC duplex (12-fiber) multimode OM2, beige adapter plate, zirconia-ceramic sleeves.
      a. Part Number: Leviton 5F100-2QL.

2.10 FIBER OPTIC CONNECTORS

A. OM3 Multimode Fiber Optic Connectors (beige): Use for **OM3 Fiber Optic System**
   1. FastCam LC Connector
      a. Part Number: Leviton 49991-LLC

2.11 PATCH CORDS/JUMPERS

A. Category 6 Modular Patch Cords **CX6100 Cat 6 Enhanced UTP System**.
   1. Slim-Line style, Category 6 UTP patch cord, 4-pair, stranded wire construction.

b. Color: 8 colors available.
c. Part Numbers:

Data - Blue
1. Leviton 6D460-03L (3 feet, Blue).
2. Leviton 6D460-05L (5 feet, Blue).
3. Leviton 6D460-07L (7 feet, Blue).
4. Leviton 6D460-15L (15 feet, Blue).
5. Leviton 6D460-20L (20 feet, Blue).

Access Points - Orange
6. Leviton 6D560-03O (3 feet, Orange).
7. Leviton 6D560-05O (5 feet, Orange).
8. Leviton 6D560-07O (7 feet, Orange).
9. Leviton 6D560-15O (15 feet, Orange).
10. Leviton 6D560-20O (20 feet, Orange).

Voice - White
11. Leviton 6D460-03W (3 feet, White).
12. Leviton 6D460-05W (5 feet, White).
13. Leviton 6D460-07W (7 feet, White).
14. Leviton 6D460-15W (15 feet, White).
15. Leviton 6D460-20W (20 feet, White).

Security Cameras - Red
16. Leviton 6D460-03R (3 feet, Red).
17. Leviton 6D460-05R (5 feet, Red).
18. Leviton 6D460-07R (7 feet, Red).
19. Leviton 6D460-15R (15 feet, Red).
20. Leviton 6D460-20R (20 feet, Red).

Printers - Black
21. Leviton 6D460-03E (3 feet, Black).
22. Leviton 6D460-05E (5 feet, Black).
23. Leviton 6D460-07E (7 feet, Black).
24. Leviton 6D460-15E (15 feet, Black).
25. Leviton 6D460-20E (20 feet, Black).

MDF to IDF Connections - Violet
26. Leviton 6D560-03V (3 feet, Violet).
27. Leviton 6D560-05V (5 feet, Violet).
28. Leviton 6D560-07V (7 feet, Violet).
29. Leviton 6D560-15V (15 feet, Violet).
30. Leviton 6D560-20V (20 feet, Violet).

B. Multimode Fiber Optic Jumpers:
1. OM2, orange. Factory-terminated, double-ended, 2-strand multimode cordage. Use for **OM2 Fiber Optic System**
a. Duplex LC-Duplex LC:
1. Leviton 50DLC-M01 (1 meter)
2. Leviton 50DLC-M02 (2 meter)

CJD Engineering LLC 2225 W. Chesterfield Blvd., Suite. 200 Springfield, MO 65807 (417) 877-1700 Fax: (417) 324-7735

PART 3 - EXECUTION

3.1 EXAMINATION

A. Examine areas to receive communications horizontal cabling.
B. Notify Architect of conditions that would adversely affect installation or subsequent use.
C. Do not begin installation until unacceptable conditions are corrected.

3.2 INSTALLATION – GENERAL

A. Install communications horizontal cabling in accordance with manufacturer's instructions, ANSI/TIA-568-C.0, ANSI/TIA-568-C.1, ANSI/TIA-569-C, BICSI TDMM, and NFPA 70.
B. Field Terminated Copper and Fiber Optic Patch Cords and Jumpers: Not allowed.
C. Copper Patch Cords and Fiber Jumpers: Manufactured by Leviton Network Solutions.
D. Install cables after building interior has been physically protected from weather and mechanical work likely to damage cabling has been completed.
E. Ensure cable pathways are completely and thoroughly cleaned before installing cabling.
F. Inspect installed conduit, wireway, cable trays, and innerduct.
G. Clean additional enclosed raceway and innerduct systems furnished.
H. Provide protection for exposed cables where subject to damage.
I. Abrasion Protection:
    1. Provide abrasion protection for cable or wire bundles which pass through holes or across edges of sheet metal.
    2. Use protective bushings to protect cables.
J. Velcro Wraps and Other Cable Management Clamps:
    1. No more than hand tightened.
    2. Fit snugly, but not compress, crimp, or otherwise change physical characteristics of cable jacket or distort placement of twisted-pair components.
    3. Replace cables exhibiting stresses due to over tightening of cable management devices.
    4. Use plenum-rated velcro in plenum spaces.
    5. Velcro wraps shall be used for all cable bundles. Plastic cable ties are not acceptable. Plenum-rated Velcro wraps are available from Leviton.
K. Where possible, route cables in overhead cable trays and inside wire management systems attached to equipment cabinets and racks.
    1. Use Velcro wraps or ducts to restrain cabling installed outside of wire management systems on racks or in cabinets.
    2. Cable Trays: Do not exceed 50 percent fill.
L. Pull Cord:
    1. Nylon, 1/8-inch minimum.
    2. Co-install with cables installed in conduit.
M. Cable Raceways: Do not fill greater than ANSI/TIA-569-B maximum fill for particular raceway type.
N. Support horizontal cables at a maximum of 48-inch (1.2 to 1.5-m) irregular intervals, if J-hook or trapeze system is used to support cable bundles.

O. Do not allow cables to rest on acoustic ceiling grids, plumbing pipes, or electrical conduits.

P. Bundle horizontal distribution cables in groups of no more than amount of cables designed for by cable support manufacturer, based on cable OD and weight.

Q. Fire-Sprinkler System:
    1. Install cables above fire-sprinkler system.
    2. Do not attach cables to fire-sprinkler system or ancillary equipment or hardware.

CJD Engineering LLC 2225 W. Chesterfield Blvd., Suite. 200 Springfield, MO 65807 (417) 877-1700 Fax: (417) 324-7735

3. Install cable system and support hardware so that it does not obscure valves, fire alarm conduit, boxes, or other control devices.

R. Do not attach cables to ceiling grid or lighting fixture wires.

S. Install appropriate carriers to support cabling, where support for horizontal cables are required.

T. Replace before final acceptance, cables damaged or exceeding recommended installation parameters during installation.

3.3 INSTALLATION – UNSHIELDED TWISTED-PAIR CABLES

A. Install unshielded twisted-pair cables in accordance with manufacturer's instructions.

B. Install cables in continuous lengths from origin to destination, without splices, except for transition points or consolidation points.

C. Where transition points or consolidation points are allowed, they shall be located in accessible locations and housed in enclosure intended and suitable for the purpose.

D. Cable Minimum Bend Radius and Maximum Pulling Tension:
1. Do not exceed bend radius for UTP = 4 X Cable OD, FTP = 4 X Cable OD.
2. Install unshielded twisted-pair cables so that there are no bends smaller than 4 times cable outside diameter at any point in the run and at the termination field.
3. Pulling Tension on 4-Pair UTP Cables: Do not exceed 25 ft.lb. for 4-pair UTP cable.

E. Separation from Power Lines: Provide following minimum separation distances between pathways for copper communications cables and power wiring of 480 volts or less:
1. Open or Nonmetal Communications Pathways:
   a. Electric motors, fluorescent light fixtures, and unshielded power lines carrying up to 3 kVA: 12 inches.
   b. Electrical equipment and unshielded power lines carrying more than 5 kVA: 36 inches.
   c. Large electrical motors or transformers: 48 inches.

2. Grounded Metal Conduit Communications Pathways:
   a. Electrical equipment and unshielded power lines carrying up to 2 kVA: 2-1/2 inches.
   b. Electrical equipment and unshielded power lines carrying from 2 kVA to 5 kVA: 6 inches.
   c. Electrical equipment and unshielded power lines carrying more than 5 kVA: 12 inches.
   d. Power lines enclosed in grounded metal conduit (or equivalent shielding) carrying from 2 kVA to 5 kVA: 3 inches.
   e. Power lines enclosed in grounded metal conduit (or equivalent shielding) carrying more than 5 kVA: 6 inches.

3.4 INSTALLATION – UNSHIELDED TWISTED-PAIR TERMINATION

A. Coil cables to house cable coil without exceeding manufacturer's bend radius.
1. In hollow wall installations where box eliminators are used, store excess wire in wall.
2. Store no more than 12 inches of UTP and 36 inches of fiber slack.
3. Loosely coil excess slack and store in ceiling above each drop location, when there is not enough space present in outlet box to store slack cables.

CJD Engineering LLC 2225 W. Chesterfield Blvd., Suite. 200 Springfield, MO 65807 (417) 877-1700 Fax: (417) 324-7735

B. Dress and terminate cables in accordance with ANSI/TIA-568-C.0, ANSI/TIA- C.1, BICSI TDMM, and manufacturer's instructions.

C. Terminate 4-pair cables on jack and patch panels using T568-B wiring scheme.

D. Pair Untwist at Termination: Do not exceed 12 mm (1/2 inch).

E. Bend Radius of Horizontal Cables:
   1. Not less than 4 times OD of UTP cables.
   2. Not less than 4 times OD of FTP cables.

F. Maintain cable jacket to within 25 mm (1 inch) of termination point.

G. Neatly bundle cables and dress to their respective panels or blocks.
   1. Feed each panel or block by individual bundle separated and dressed back to point of cable entrance into rack or frame.

3.5 INSTALLATION – OPTICAL FIBER CABLES

A. Place fiber optic cables to maintain minimum cable bend radius limits specified by manufacturer or 15 times cable diameter, whichever is larger.

B. Use care when handling fiber optic cables.
   1. Carefully monitor pulling tension so as not to exceed limits specified by manufacturer.

C. Do not splice horizontal fiber optic cables.

3.6 INSTALLATION – ACCESS POINTS

A. All access point horizontal cables shall maintain a (15 ft.) service loop at the access point end for flexibility in final access point placement.

B. Each Access Point location will require 2 cables.

3.7 FIELD QUALITY CONTROL

A. Cables and Termination Hardware: Test 100 percent for defects in installation and verify cabling system performance under installed conditions in accordance with ANSI/TIA-568-C.0.
   1. Verify all pairs of each installed cable before system acceptance.
   2. Defects in cabling system installation, including but not limited to cables, connectors, patch panels, and connector blocks shall be repaired or replaced to ensure 100 percent useable conductors in all cables installed.

B. Test all cables in accordance with this specification section, ANSI/TIA-568-C.2, and ANSI/TIA-568-C.3 standards, and Berk-Tek and Leviton Network Solutions instructions
   1. If any of these are in conflict, bring discrepancies to the attention of the Architect for clarification and resolution.

C. Cables, Jacks, Connecting Blocks, and Patch Panels:
   1. Verify all pairs of each installed cable before system acceptance.

CJD Engineering LLC 2225 W. Chesterfield Blvd., Suite. 200 Springfield, MO 65807 (417) 877-1700 Fax: (417) 324-7735

2. Defects in cabling system installation, including but not limited to cables, connectors, patch panels, and connector blocks shall be repaired or replaced to ensure 100 percent useable conductors in all cables installed.

D. Testing Unshielded Twisted-Pair Cables: (**NOTE: Permanent Link Test results are recommended, and are the expected norm** – unless patch cords that will remain installed at the work area and cross-connect are also being tested, in which case Channel Test results would be expected and accepted).
1. Test twisted-pair copper cable links for continuity, pair reversals, shorts, opens, and performance as specified.
   a. Additional testing is required to verify Category performance.
   b. Test horizontal cabling using approved certification tester for Category 6A, Category 6, and Category 5e performance compliance in accordance with ANSI/TIA-568-C.2.
      (NOTE: Appropriate Fluke, Agilent, Ideal, or JDSU certification testers may be used).
   c. Category 6A shall conform to ANSI/TIA-568-C.2 for augmented Category 6 to 500 MHz.
2. Follow ANSI/TIA-568-C.2.
3. Basic Tests Required:
   a. Wire map.
   b. Length (feet).
   c. Insertion loss (dB), formerly attenuation.
   d. NEXT (Near end crosstalk) (dB).
   e. Return loss (dB).
   f. ELFEXT (dB).
   g. Propagation delay (ns).
   h. Delay skew (ns).
   i. PSNEXT (Power sum near-end crosstalk loss) (dB).
   j. PSELFEXT (Power sum equal level far-end crosstalk loss) (dB).
4. Test Category 6A by auto test to 500 MHz.
   a. Alien Crosstalk (AXT) testing and AXT test results are NOT required of a Category 6A system. (**Note**: AXT testing may be required by the customer, in which case these tests WOULD have to be performed).
5. Test Category 6 by auto test to 250 MHz.
6. Test Category 5e by auto test to 100 MHz.
7. Provide test results in approved certification testers original software format on CD, with the following minimum information per cable:
   a. Circuit ID.
   b. Information from specified basic tests required.
   c. Test Result: “Pass” or “Fail”.
   d. Date and time of test.
   e. Project name.
   f. NVP.
   g. Software version.
8. An occasional asterisk-Pass (*Pass) will be accepted by Leviton or Berk-Tek at the manufacturer’s discretion, but rework of these links should be done in an attempt to achieve clean “Pass” results prior to submission of test results.
9. Submit fully functional version of tester software for use by the Owner in reviewing test results.
10. Report in writing to the Owner immediately, along with copy of test results, failed test results that cannot be remedied through re-termination (as in the case of reversed or split pairs).

E. Optical Fiber:
1. Testing procedures shall be in accordance with the following:
   a. ANSI/TIA-568-C.3.
   b. ANSI/TIA-526-7, Method B.

CJD Engineering LLC 2225 W. Chesterfield Blvd., Suite. 200 Springfield, MO 65807 (417) 877-1700 Fax: (417) 324-7735

c. Proposed TSB-140 Tier One Fiber Certification, C.
d. Encircled Flux testing per the TSB-4979 and TIA-526-14-B standard.

2. Test Equipment: Certification tester (Note: Fluke or Agilent testers may be used).
3. Testing:
   a. Test optical fibers at both 850 nm and 1300 nm wavelengths for multimode, 1310 nm and 1550 nm wavelengths for singlemode, end-to-end insertion loss, Telecommunications Room (TR) to Telecommunications Outlet (TO), Telecommunications Outlet (TO) to Telecommunications Room (TR).
   b. Maximum insertion loss for horizontal fiber optic cables without consolidation point: 2.0 dB.
   c. Test horizontal fiber runs TR to TO, TO to TR, at wavelength of operation to desktop applications.
4. Submit software copy of test results, in original tester software format, to the Owner and to the Manufacturer (either Berk-Tek or Leviton).

3.8 LABELING

A. All labeling is to be in accordance with ANSI/TIA-606-B and manufacturer's instructions.

B. Label horizontal cables using machine-printed label at each end of cable at approximately 12 inches from termination point and again at approximately 48 inches from termination point.
   1. Handwritten Labels: Not acceptable.

C. Label patch panel ports and TO ports with a similar cable identifier.

D. Labels:
   1. Owner will provide specific labeling requirements. Coordinate with the Owner.

E. Note labeling information on as-built drawings.

3.9 PROTECTION

A. Protect installed communications horizontal cabling from damage during construction.

END OF SECTION 266110

SECTION 269000 FIRE DETECTION AND ALARM SYSTEM

PART 1 - GENERAL

1.1. DESCRIPTION

A. This section of the specification includes design and installation of a new fire alarm system, including furnishing, installation, connection and testing of new equipment as required to form a complete, operative, coordinated system. It shall include, but not be limited to, alarm initiating devices, alarm notification appliances, auxiliary control and power devices, annunciators, and wiring as shown on the drawings and specified herein.

B. The fire alarm system shall provide notification via voice annunciation. Contractor is responsible for verifying and providing for intelligibility of voice annunciation in all areas of the building.

C. B. The fire alarm system shall comply with requirements of NFPA Standard 72 for Protected Premises Signaling Systems except as modified and supplemented by this specification. The system shall be electrically supervised and monitor the integrity of all conductors.

D. C. The FACP and peripheral devices shall be manufactured 100% by a single U.S. manufacturer (or division thereof).

E. D. The system and its components shall be Underwriters Laboratories, Inc. listed under the appropriate UL testing standard as listed herein for fire alarm applications and the installation shall be in compliance with the UL listing.

F. E. The installing company shall employ NICET (minimum Level II Fire Alarm Technology) technicians on site to guide the final checkout and to ensure the systems integrity.

G. F. Approved manufacturers: Notifier, Simplex, or with approval prior to bid.

1.2. SCOPE

A. Basic Performance:

1. Alarm, trouble and supervisory signals from all intelligent reporting devices shall be encoded on NFPA Style 4 (Class B) Signaling Line Circuits (SLC).
2. Initiation Device Circuits (IDC) shall be wired Class A (NFPA Style D) as part of an addressable device connected by the SLC Circuit.
3. Notification Appliance Circuits (NAC) shall be wired Class A (NFPA Style Z) as part of an addressable device connected by the SLC Circuit.
4. On Style 6 or 7 (Class A) configurations a single ground fault or open circuit on the system Signaling Line Circuit shall not cause system malfunction, loss of operating power or the ability to report an alarm.
5. Alarm signals arriving at the FACP shall not be lost following a primary power failure (or outage) until the alarm signal is processed and recorded.

CJD Engineering LLC 2225 W. Chesterfield Blvd., Suite. 200 Springfield, MO 65807 (417) 877-1700 Fax: (417) 324-7735

B. Furnish and install complete expansion of existing Fire Alarm Systems as described herein and as shown on the plans; to be wired, connected, and left in first class operating condition. The system shall use closed loop initiating device circuits with individual zone supervision, individual indicating appliance circuit supervision, incoming and standby power supervision. Fire alarm system shall provide Voice Annunciation. Verify requirements to connect to, supplement, or replace existing fire alarm control panel control panel for capability to provide voice announcements, pre-recorded messages, and monitor fire pump status (as applicable). Include control panel, manual pull stations, automatic fire detectors, speakers, flashing lights annunciator, all wiring, and connections to devices, outlet boxes, junction boxes, and all other necessary material for a complete operating system.

C. Basic System Functional Operation:

1. When a fire alarm condition is detected and reported by one of the system initiating devices, the following functions shall immediately occur:
    a. The system alarm LED on the system display shall flash.
    b. A local piezo electric signal in the control panel shall sound.
    c. A backlit LCD display shall indicate all information associated with the fire alarm condition, including the type of alarm point and its location within the protected premises.
    d. History storage equipment shall log the information associated each new fire alarm control panel condition, along with time and date of occurrence.
    e. All system output programs assigned via control-by-event interlock programming to be activated by the particular point in alarm shall be executed, and the associated system outputs (notification appliances and/or relays) shall be activated.

1.3. SUBMITTALS

A. General:

1. Refer to electrical submittal requirements included with the General Electrical Requirements specifications section, for additional submittal requirements, including quantity of submittals that shall be submitted to the Architect/Engineer for review.
2. All references to manufacturer's model numbers and other pertinent information herein is intended to establish minimum standards of performance, function and quality. Equivalent compatible UL-listed equipment from other manufacturers may be substituted for the specified equipment as long as the minimum standards are met.
3. For equipment other than that specified, the contractor shall supply proof that such substitute equipment equals or exceeds the features, functions, performance, and quality of the specified equipment.

B. Shop Drawings:

1. Sufficient information, clearly presented, shall be included to determine compliance with drawings and specifications.
2. Include manufacturer's name(s), model numbers, ratings, power requirements, equipment layout, device arrangement, complete wiring point-to-point diagrams, and conduit layouts.
3. Show annunciator layout, configurations, and terminations.

CJD Engineering LLC 2225 W. Chesterfield Blvd., Suite. 200 Springfield, MO 65807 (417) 877-1700 Fax: (417) 324-7735

4. Include detailed battery and voltage drop calculations.
5. Submit drawings to identify all device locations. Submitted Plans/Drawings shall include A/V and all visual-only device audible and visual output ratings (decibel and candela) for each device location.

C. Manuals:

1. Submit simultaneously with the shop drawings, complete operating and maintenance manuals listing the manufacturer's name(s), including technical data sheets.
2. Wiring diagrams shall indicate internal wiring for each device and the interconnections between the items of equipment.
3. Provide a clear and concise description of operation that gives, in detail, the information required to properly operate the equipment and system.

D. Software Modifications

1. Provide the services of a factory trained and authorized technician to perform all system software modifications, upgrades or changes. Response time of the technician to the site shall not exceed 4 hours.
2. Provide all hardware, software, programming tools and documentation necessary to modify the fire alarm system on site. Modification includes addition and deletion of devices, circuits, zones and changes to system operation and custom label changes for devices or zones. The system structure and software shall place no limit on the type or extent of software modifications on-site.

E. Certifications:

Together with the shop drawing submittal, submit a certification from the major equipment manufacturer indicating that the proposed supervisor of the installation and the proposed performer of contract maintenance is an authorized representative of the major equipment manufacturer. Include names and addresses in the certification.

1.4. GUARANTY:

All work performed and all material and equipment furnished under this contract shall be free from defects and shall remain so for a period of at least one (1) year from the date of acceptance. The full cost of maintenance, labor and materials required to correct any defect during this one year period shall be included in the submittal bid.

1.5. POST CONTRACT MAINTENANCE:

A. Complete maintenance and repair service for the fire alarm system shall be available from a factory trained authorized representative of the manufacturer of the major equipment for a period of five (5) years after expiration of the guaranty.

B. As part of the bid/proposal, include a quote for a maintenance contract to provide all maintenance, tests, and repairs described below. Include also a quote for unscheduled maintenance/repairs, including hourly rates for technicians trained on this equipment, and response travel costs for each year of the maintenance period. Submittals that do not

identify all post contract maintenance costs will not be accepted. Rates and costs shall be valid for the period of five (5) years after expiration of the guaranty.

C. Maintenance and testing shall be on a semiannual basis or as required by the AHJ. A preventive maintenance schedule shall be provided by the contractor describing the protocol for preventive maintenance. The schedule shall include:

1. Systematic examination, adjustment and cleaning of all detectors, manual fire alarm stations, control panels, power supplies, relays, water-flow switches and all accessories of the fire alarm system.
2. Each circuit in the fire alarm system shall be tested semiannually.
3. Each smoke detector shall be tested in accordance with the requirements of NFPA 72 Chapter 7.

1.6. POST CONTRACT EXPANSIONS:

A. The contractor shall have the ability to provide parts and labor to expand the system specified, if so requested, for a period of five (5) years from the date of acceptance.

B. As part of the submittal, include a quotation for all parts and material, and all installation and test labor as needed to increase the number of intelligent or addressable devices by ten percent (10%). This quotation shall include intelligent smoke detectors, intelligent heat detectors, addressable manual stations, addressable monitor modules and addressable modules equal in number to one tenth of the number required to meet this specification (list actual quantity of each type).

C. The quotation shall include installation, test labor, and labor to reprogram the system for this 10% expansion. If additional FACP hardware is required, include the material and labor necessary to install this hardware.

D. Do not include cost of conduit or wire or the cost to install conduit or wire except for labor to make final connections at the FACP and at each intelligent addressable device. Do not include the cost of conventional peripherals or the cost of initiating devices or notification appliances connected to the addressable monitor/control modules.

E. Submittals that do not include this estimate of post contract expansion cost will not be accepted.

1.7. APPLICABLE STANDARDS AND SPECIFICATIONS:

The specifications and standards listed below form a part of this specification. The system shall fully comply with the latest issue of these standards, if applicable.

A. National Fire Protection Association (NFPA) - USA:

No. 13	Sprinkler Systems
No. 2001	Clean Agent Extinguishing Systems
No. 72	National Fire Alarm Code
No. 101	Life Safety Code

B. Underwriters Laboratories Inc. (UL) - USA:

No. 268	Smoke Detectors for Fire Protective Signaling Systems
No. 864	Control Units for Fire Protective Signaling Systems
No. 268A	Smoke Detectors for Duct Applications
No. 521	Heat Detectors for Fire Protective Signaling Systems
No. 464	Audible Signaling Appliances
No. 38	Manually Actuated Signaling Boxes
No. 346	Water-flow Indicators for Fire Protective Signaling Systems
No. 1076	Control Units for Burglar Alarm Proprietary Protective Signaling Systems
No. 1971	Visual Notification Appliances
No. 217 217	Smoke Detectors, Single and Multiple Station
N0. 228	Door Closers - Holders for Fire Protective Signaling Systems
No. 1481	Power Supplies for Fire Protective Signaling Systems
No. 60951	Safety of Information Technology Equipment

C. Local and State Building Codes.

D. **All requirements of the Authority Having Jurisdiction (AHJ).**

1.8. APPROVALS:

A. The system shall have proper listing and/or approval from the following nationally recognized agencies:
UL Underwriters Laboratories Inc

B. The fire alarm control panel shall meet UL Standard 864 Ninth Edition (Control Units) and UL Standard 1076 (Proprietary Burglar Alarm Systems).

C. The system shall be listed by the national agencies as suitable for extinguishing release applications. The system shall support release of high and low pressure CO2.

PART 2 - PRODUCTS

2.1. EQUIPMENT AND MATERIAL, GENERAL:

A. All equipment and components shall be new, and the manufacturer's current model. The materials, appliances, equipment and devices shall be tested and listed by a nationally recognized approvals agency for use as part of a protective signaling system, meeting the National Fire Alarm Code.

B. All equipment and components shall be installed in strict compliance with manufacturers' recommendations. Consult the manufacturer's installation manuals for all wiring diagrams, schematics, physical equipment sizes, etc., before beginning system installation.

C. All equipment shall be attached to walls and ceiling/floor assemblies and shall be held firmly in place (e.g., detectors shall not be supported solely by suspended ceilings). Fasteners and supports shall be adequate to support the required load.

2.2. CONDUIT AND WIRE:

A. Conduit:

1. Conduit shall be in accordance with The National Electrical Code (NEC), local and state requirements.
2. Where required, all wiring shall be installed in conduit or raceway. Conduit fill shall not exceed 40 percent of interior cross sectional area where three or more cables are contained within a single conduit.
3. Cable must be separated from any open conductors of power, or Class 1 circuits, and shall not be placed in any conduit, junction box or raceway containing these conductors, per NEC Article 760.
4. Wiring for 24 volt DC control, alarm notification, emergency communication and similar power-limited auxiliary functions may be run in the same conduit as initiating and signaling line circuits. All circuits shall be provided with transient suppression devices and the system shall be designed to permit simultaneous operation of all circuits without interference or loss of signals.
5. Conduit shall not enter the fire alarm control panel or any other remotely mounted control panel equipment or back boxes, except where conduit entry is specified by the FACP manufacturer.
6. Conduit shall be 3/4-inch (19.1 mm) minimum.

B. Wire:

1. All fire alarm system wiring shall be new.
2. Wiring shall be in accordance with local, state and national codes (e.g., NEC Article 760) and as recommended by the manufacturer of the fire alarm system. Number and size of conductors shall be as recommended by the fire alarm system manufacturer, but not less than 18 AWG (1.02 mm) for Initiating Device Circuits, Signaling Line Circuits, and Notification Appliance Circuits.
3. All wire and cable shall be listed and/or approved by a recognized testing agency for use with a protective signaling system.
4. Wire and cable not installed in conduit shall have a fire resistance rating suitable for the installation as indicated in NFPA 70 (e.g., FPLR).
5. Wiring used for the multiplex communication circuit (SLC) shall be twisted and unshielded and support a minimum wiring distance of 12,500 feet. The design of the system shall permit use of IDC and NAC wiring in the same conduit with the SLC communication circuit.
6. All field wiring shall be electrically supervised for open circuit and ground fault.
7. The fire alarm control panel shall be capable of t-tapping Class B (NFPA Style 4) Signaling Line Circuits (SLCs). Systems that do not allow or have restrictions in, for example, the amount of t-taps, length of t-taps etc., are not acceptable.

C. Terminal Boxes, Junction Boxes and Cabinets:
All boxes and cabinets shall be UL listed for their use and purpose.

D. Initiating circuits shall be arranged to serve like categories (manual, smoke, water-flow). Mixed category circuitry shall not be permitted except on signaling line circuits connected to intelligent reporting devices.

E. The fire alarm control panel shall be connected to a separate dedicated branch circuit,

CJD Engineering LLC 2225 W. Chesterfield Blvd., Suite. 200 Springfield, MO 65807 (417) 877-1700 Fax: (417) 324-7735

maximum 20 amperes. This circuit shall be labeled at the main power distribution panel as FIRE ALARM. Fire alarm control panel primary power wiring shall be 12 AWG. The control panel cabinet shall be grounded securely to either a cold water pipe or grounding rod.

2.3. MAIN FIRE ALARM CONTROL PANEL OR NETWORK NODE:

A. Main FACP or network node shall contain a microprocessor based Central Processing Unit (CPU) and power supply in an economical space saving single board design. The CPU shall communicate with and control the following types of equipment used to make up the system: intelligent addressable smoke and thermal (heat) detectors, addressable modules, printer, annunciators, and other system controlled devices.

B. Operator Control

1. Acknowledge Switch:
   a. Activation of the control panel acknowledge switch in response to new alarms and/or troubles shall silence the local panel piezo electric signal and change the alarm and trouble LEDs from flashing mode to steady-ON mode. If multiple alarm or trouble conditions exist, depression of this switch shall advance the LCD display to the next alarm or trouble condition.
   b. Depression of the Acknowledge switch shall also silence all remote annunciator piezo sounders.
2. Alarm Silence Switch:
   Activation of the alarm silence switch shall cause all programmed alarm notification appliances and relays to return to the normal condition after an alarm condition. The selection of notification circuits and relays that are silenceable by this switch shall be fully field programmable within the confines of all applicable standards. The FACP software shall include silence inhibit and auto-silence timers.
3. Alarm Activate (Drill) Switch:
   The Alarm Activate switch shall activate all notification appliance circuits. The drill function shall latch until the panel is silenced or reset.
4. System Reset Switch:
   Activation of the System Reset switch shall cause all electronically-latched initiating devices, appliances or software zones, as well as all associated output devices and circuits, to return to their normal condition.
5. Lamp Test:
   The Lamp Test switch shall activate all local system LEDs, light each segment of the liquid crystal display and display the panel software revision for service personal.

C. System Capacity and General Operation
1. Refer to construction documents fire alarm system diagram, for control panel or each network node's intelligent/addressable device capacity. If intelligent point or addressable device capacity is not shown on construction documents, prior to bidding, contractor shall contact engineer for requirements.
2. The control panel or each network node shall include Form-C alarm, trouble, supervisory, and security relays rated at a minimum of 2.0 amps @ 30 VDC.
3. It shall also include four Class B (NFPA Style Y) or Class A (NFPA Style Z) programmable Notification Appliance Circuits.
4. The Notification Appliance Circuits shall be programmable to Synchronize with System Sensor, Gentex and Wheelock Notification Appliances.

5. The system shall include a full featured operator interface control and annunciation panel that shall include a backlit Liquid Crystal Display (LCD), individual color coded system status LEDs, and an alphanumeric keypad with easy touch rubber keys for the field programming and control of the fire alarm system.
6. The system shall be programmable, configurable, and expandable in the field without the need for special tools, PROM programmers or PC based programmers. It shall not require replacement of memory ICs to facilitate programming changes.
7. The system shall allow the programming of any input to activate any output or group of outputs. Systems that have limited programming (such as general alarm), have complicated programming (such as a diode matrix), or require a laptop personal computer are not considered suitable substitutes.

   The FACP shall support up to 20 logic equations, including "and," "or," and "not," or time delay equations to be used for advanced programming. Logic equations shall require the use of a PC with a software utility designed for programming.
8. The FACP or each network node shall provide the following features:
   a. Drift compensation to extend detector accuracy over life. Drift compensation shall also include a smoothing feature, allowing transient noise signals to be filtered out.
   b. Detector sensitivity test, meeting requirements of NFPA 72.
   c. Maintenance alert, with two levels (maintenance alert/maintenance urgent), to warn of excessive smoke detector dirt or dust accumulation.
   d. Nine sensitivity levels for alarm, selected by detector. The alarm level range shall be .5 to 2.35 percent per foot for photoelectric detectors and 0.5 to 2.5 percent per foot for ionization detectors. The system shall also support sensitive advanced detection laser detectors with an alarm level range of .02 percent per foot to 2.0 percent per foot. The system shall also include up to nine levels of Prealarm, selected by detector, to indicate impending alarms to maintenance personnel.
   e. The ability to display or print system reports.
   f. Alarm verification, with counters and a trouble indication to alert maintenance personnel when a detector enters verification 20 times.
   g. PAS presignal, meeting NFPA 72 requirements.
   h. Rapid manual station reporting (under 3 seconds) and shall meet NFPA 72 requirements for activation of notification circuits within 10 seconds of initiating device activation.
   i. Periodic detector test, conducted automatically by the software.
   j. Self optimizing pre-alarm for advanced fire warning, which allows each detector to learn its particular environment and set its prealarm level to just above normal peaks.
   k. Cross zoning with the capability of counting: two detectors in alarm, two software zones in alarm, or one smoke detector and one thermal detector.
   l. Walk test, with a check for two detectors set to same address.
   m. Control-by-time for non-fire operations, with holiday schedules.
   n. Day/night automatic adjustment of detector sensitivity.
   o. Device blink control for sleeping areas.
9. The FACP shall be capable of coding main panel node notification circuits in March Time (120 PPM), Temporal (NFPA 72), and California Code. Panel notification circuits (NAC 1, 2, 3 and 4) shall also support Two-Stage operation, Canadian Dual Stage (3 minutes) and Canadian Dual Stage (5 minutes). Two stage operation shall allow 20 Pulses Per Minute (PPM) on alarm and 120 PPM after 5 minutes or when a second

device activates. Canadian Dual stage is the same as Two-Stage except will only switch to second stage by activation of Drill Switch 3 or 5 minute timer. The panel shall also provide a coding option that will synchronize specific strobe lights designed to accept a specific "sync pulse."

10. Network Communication
    a. The FACP shall be capable of communicating on a Local Area Network (LAN), a firmware package that utilizes a peer-to-peer, inherently regenerative communication format and protocol.

D. Central Microprocessor
1. The microprocessor shall be a state-of-the-art, high speed, 16-bit RISC device and it shall communicate with, monitor and control all external interfaces. It shall include an EPROM for system program storage, Flash memory for building-specific program storage, and a "watch dog" timer circuit to detect and report microprocessor failure.
2. The microprocessor shall contain and execute all control-by-event programs for specific action to be taken if an alarm condition is detected by the system. Control-by-event equations shall be held in non-volatile programmable memory, and shall not be lost even if system primary and secondary power failure occurs.
3. The microprocessor shall also provide a real-time clock for time annotation of system displays, printer, and history file. The time-of-day and date shall not be lost if system primary and secondary power supplies fail. The real time clock may also be used to control non-fire functions at programmed time-of-day, day-of-week, and day-of-year.
4. A special program check function shall be provided to detect common operator errors.
5. An auto-program (self-learn) function shall be provided to quickly install initial functions and make the system operational.
6. For flexibility and to ensure program validity, an optional Windows(TM) based program utility shall be available. This program shall be used to off-line program the system with batch upload/download, and have the ability to upgrade the manufacturers (FLASH) system code changes. This program shall also have a verification utility, which scans the program files, identifying possible errors. It shall also have the ability to compare old program files to new ones, identifying differences in the two files to allow complete testing of any system operating changes. This shall be in incompliance with the NFPA 72 requirements for testing after system modification.

E. System Display

1. The system shall support the following display mode options:
    a. 80 character display option. The display shall include an 80-character backlit alphanumeric Liquid Crystal Display (LCD) and a full PC style QWERTY keypad.
2. The display shall provide all the controls and indicators used by the system operator:
    a. The 80-character display shall include the following operator control switches: ACKNOWLEDGE, ALARM SILENCE, ALARM ACTIVATE (drill), SYSTEM RESET, and LAMP TEST.
3. The display shall annunciate status information and custom alphanumeric labels for all intelligent detectors, addressable modules, internal panel circuits, and software zones.
4. The display shall also provide Light-Emitting Diodes.
    a. The 80-character display shall provide 12 Light-Emitting-Diodes (LEDs), that

indicate the status of the following system parameters: AC POWER, FIRE ALARM, PREALARM WARNING, SECURITY ALARM, SUPERVISORY SIGNAL, SYSTEM TROUBLE, DISABLED POINTS, ALARM SILENCED, Controls Active, Pre-Discharge, Discharge and Abort.

5. The display shall have QWERTY type keypad.
   a. The 80-character display keypad shall be an easy to use QWERTY type keypad, similar to a PC keyboard. This shall be part of the standard system and have the capability to command all system functions, entry of any alphabetic or numeric information, and field programming. Two different password levels shall be provided to prevent unauthorized system control or programming.
6. The system shall support the display of battery charging current and voltage on the 80-character LCD display.

F. Signaling Line Circuits (SLC)

1. Each FACP or FACP network node shall support up to two SLCs. Each SLC interface shall provide power to and communicate with up to 159 intelligent detectors (ionization, photoelectric or thermal) and 159 intelligent modules (monitor or control) for a loop capacity of 318 devices. The addition of the optional second loop shall double the device capacity, supporting a total of 636 devices. Each SLC shall be capable of NFPA 72 Style 4, Style 6, or Style 7 (Class A or B) wiring.
2. CPU shall receive analog information from all intelligent detectors to be processed to determine whether normal, alarm, pre-alarm, or trouble conditions exist for each detector. The software shall automatically maintain the detector's desired sensitivity level by adjusting for the effects of environmental factors, including the accumulation of dust in each detector. The analog information shall also be used for automatic detector testing and for the automatic determination of detector maintenance requirements.

G. Serial Interfaces

1. The system shall include two serial EIA-232 interfaces. Each interface shall be a means of connecting UL Listed Information Technology Equipment (ITE) peripherals.

H. Enclosures:

1. The control panel shall be housed in a UL-listed cabinet suitable for surface or semi-flush mounting. The cabinet and front shall be corrosion protected, given a rust-resistant prime coat, and manufacturer's standard finish.
2. The back box and door shall be constructed of 0.060 steel with provisions for electrical conduit connections into the sides and top.
3. The door shall provide a key lock and shall include a glass or other transparent opening for viewing of all indicators. For convenience, the door may be site configured for either right or left hand hinging.

I. Power Supply:

1. A high tech off-line switching power supply shall be available for the fire alarm control panel or network node and provide 6.0 amps of available power for the control panel and peripheral devices.

2. Provisions will be made to allow the audio-visual power to be increased as required by adding modular expansion audio-visual power supplies.
3. Positive-Temperature-Coefficient (PTC) thermistors, circuit breakers, or other over-current protection shall be provided on all power outputs. The power supply shall provide an integral battery charger for use with batteries up to 200 AH or may be used with an external battery and charger system. Battery arrangement may be configured in the field.
4. The power supply shall continuously monitor all field wires for earth ground conditions, and shall have the following LED indicators:
   Ground Fault LED
   AC Power Fail LED
   NAC on LED (4)
5. The main power supply shall operate on 120 VAC, 60 Hz, and shall provide all necessary power for the FACP.
6. The main power supply shall provide a battery charger using dual-rate charging techniques for fast battery recharge and be capable of charging batteries up to 200 AH.
7. All circuits shall be power-limited, per UL864 requirements.

J. Specific System Operations

1. Smoke Detector Sensitivity Adjust: A means shall be provided for adjusting the sensitivity of any or all addressable intelligent detectors in the system from the system keypad. Sensitivity range shall be within the allowed UL window and have a minimum of 9 levels.
2. Alarm Verification: Each of the intelligent addressable smoke detectors in the system may be independently selected and enabled to be an alarm verified detector. The alarm verification delay shall be programmable from 5 to 30 seconds and each detector shall be able to be selected for verification. The FACP shall keep a count of the number of times that each detector has entered the verification cycle. These counters may be displayed and reset by the proper operator commands.
3. Point Disable: Any addressable device or conventional circuit in the system may be enabled or disabled through the system keypad.
4. Point Read: The system shall be able to display or print the following point status diagnostic functions:
   a. Device status
   b. Device type
   c. Custom device label
   d. View analog detector values
   e. Device zone assignments
   f. All program parameters

5. System Status Reports: Upon command from an operator of the system, a status report will be generated and printed, listing all system status.
6. System History Recording and Reporting: The fire alarm control panel shall contain a history buffer that will be capable of storing up to 800 events. Up to 200 events shall be dedicated to alarm and the remaining events are general purpose. Systems that do not have dedicated alarm storage, where events are overridden by non-alarm type events, are not suitable substitutes. Each of these activations will be stored and time and date stamped with the actual time of the activation. The contents of the history

buffer may be manually reviewed, one event at a time, or printed in its entirety. The history buffer shall use non-volatile memory. Systems that use volatile memory for history storage are not acceptable substitutes.

7. Automatic Detector Maintenance Alert: The fire alarm control panel shall automatically interrogate each intelligent detector and shall analyze the detector responses over a period of time. If any intelligent detector in the system responds with a reading that is above or below normal limits, then the system will enter the trouble mode, and the particular detector will be annunciated on the system display, and printed on the optional printer. This feature shall in no way inhibit the receipt of alarm conditions in the system, nor shall it require any special hardware, special tools or computer expertise to perform.
8. Pre-Alarm Function: The system shall provide two levels of pre-alarm warning to give advance notice of a possible fire situation. Both pre-alarm levels shall be fully field adjustable. The first level shall give an audible indication at the panel. The second level shall give an audible indication and may also activate control relays. The system shall also have the ability to activate local detector sounder bases at the pre-alarm level, to assist in avoiding nuisance alarms.
9. Software Zones: The FACP shall provide 100 software zones, 10 additional special function zones, 10 releasing zones, and 20 logic zones.
10. The fire alarm control panel shall include a walk test feature. It shall include the ability to test initiating device circuits and notification appliance circuits from the field without returning to the panel to reset the system. Operation shall be as follows:
    a. Alarming an initiating device shall activate programmed outputs, which are selected to participate in walk test, for 3 seconds.
    b. Introducing a trouble into the initiating device shall activate the programmed outputs for 8 seconds.
    c. All devices tested in walk test shall be recorded in the history buffer.

11. Waterflow Operation
    An alarm from a waterflow detection device shall activate the appropriate alarm message on the main panel display, turn on all programmed notification appliance circuits and shall not be affected by the signal silence switch.
12. Supervisory Operation
    An alarm from a supervisory device shall cause the appropriate indication on the system display, light a common supervisory LED, but will not cause the system to enter the trouble mode.
13. Signal Silence Operation
    The FACP shall have the ability to program each output circuit (notification, relay, speaker etc) to deactivate upon depression of the signal silence switch.
14. Non-Alarm Input Operation
    Any addressable initiating device in the system may be used as a non-alarm input to monitor normally open contact type devices. Non-alarm functions are a lower priority than fire alarm initiating devices.

2.4. SYSTEM COMPONENTS:

A. Strobe lights shall meet the requirements of the ADA, UL Standard 1971, be fully synchronized, and shall meet the following criteria:
   1. The maximum pulse duration shall be 2/10 of one second
   2. Strobe intensity shall meet the requirements of UL 1971.

3. The flash rate shall meet the requirements of UL 1971.

B. Horn/Strobes:
1. Operate on 24 VDC
2. Have two selectable tone options of temporal 3 and non-temporal continuous pattern.
3. Have at least 2 audibility options
4. Maximum Pulse Duration: 0.2 second.
5. Strobe Intensity: UL 1971.
6. Flash Rate: UL 1971.
7. Strobe Candela Rating: Determine by positioning selector switch on back of device.

C. Waterflow Indicator:
1. Waterflow Switches shall be an integral, mechanical, non-coded, non-accumulative retard type.
2. Waterflow Switches shall have an alarm transmission delay time which is conveniently adjustable from 0 to 60 seconds. Initial settings shall be 30-45 seconds.
3. All waterflow switches shall come from a single manufacturer and series.
4. Waterflow switches shall be provided and connected under this section but installed by the mechanical contractor.
5. Where possible, locate waterflow switches a minimum of one (1) foot from a fitting which changes the direction of the flow and a minimum of three (3) feet from a valve.

D. Sprinkler and Standpipe Valve Supervisory Switches:

1. Each sprinkler system water supply control valve riser, zone control valve, and standpipe system riser control valve shall be equipped with a supervisory switch. Standpipe hose valves, and test and drain valves shall not be equipped with supervisory switches.
2. PIV (post indicator valve) or main gate valves shall be equipped with a supervisory switch.
3. The switch shall be mounted so as not to interfere with the normal operation of the valve and adjusted to operate within two revolutions toward the closed position of the valve control, or when the stem has moved no more than one-fifth of the distance from its normal position.
4. The supervisory switch shall be contained in a weatherproof aluminum housing, which shall provide a 3/4 inch (19 mm) conduit entrance and incorporate the necessary facilities for attachment to the valves.
5. The switch housing shall be finished in red baked enamel.
6. The entire installed assembly shall be tamper proof and arranged to cause a switch operation if the housing cover is removed, or if the unit is removed from its mounting.
7. Valve supervisory switches shall be provided and connected under this section and installed by mechanical contractor.
   a. This unit shall provide for each zone: alarm indications, using a red alarm and yellow trouble long-life LEDs and control switches for the control of fire alarm control panel functions. The annunciator will also have an ON-LINE LED, local piezo electric signal, local acknowledge/lamp test switch, and custom slide-in zone/function identification labels.
   b. Switches shall be available for remote annunciation and control of output points in the system, system acknowledge, telephone zone select, speaker

select, global signal silence, and global system reset within the confines of all applicable standards.

E. Alphanumeric LCD Type Annunciator:

1. The alphanumeric display annunciator shall be a supervised, remotely located back-lit LCD display containing a minimum of eighty (80) characters for alarm annunciation in clear English text.
2. The LCD annunciator shall display all alarm and trouble conditions in the system.
3. An audible indication of alarm shall be integral to the alphanumeric display.
4. The display shall be UL listed for fire alarm application.
5. It shall be possible to connect up to 32 LCD displays and be capable of wiring distances up to 6,000 feet from the control panel.
6. The annunciator shall connect to a separate, dedicated "terminal mode" EIA-485 interface. This is a two-wire loop connection and shall be capable of distances to 6,000 feet. Each terminal mode LCD display shall mimic the main control panel.
7. The system shall allow a minimum of 32 terminal mode LCD annunciators that shall be capable of the following system functions: Acknowledge, Signal Silence and Reset, which shall be protected from unauthorized use by a key switch or password.
8. The LED annunciator shall offer an interface to a graphic style annunciator and provide each of the features listed above.

F. Universal Digital Alarm Communicator Transmitter (UDACT). The UDACT is an interface for communicating digital information between a fire alarm control panel and an UL-Listed central station.

1. The UDACT shall be compact in size, mounting in a standard module position of the fire alarm control cabinet. Optionally, the UDACT shall have the ability for remote mounting, up to 6,000 feet from the fire alarm control panel. The wire connections between the UDACT and the control panel shall be supervised with one pair for power and one pair for multiplexed communication of overall system status. Systems that utilize relay contact closures are not acceptable.
2. The UDACT shall include connections for dual telephone lines (with voltage detect), per UL/NFPA/FCC requirements. It shall include the ability for split reporting of panel events up to three different telephone numbers.
3. The UDACT shall be completely field programmable from a built-in keypad and 4 character red, seven segment display.
4. The UDACT shall be capable of transmitting events in at least 15 different formats. This ensures compatibility with existing and future transmission formats.
5. Communication shall include vital system status such as:
   - Independent Zone (Alarm, trouble, non-alarm, supervisory)
   - Independent Addressable Device Status
   - AC (Mains) Power Loss
   - Low Battery and Earth Fault
   - System Off Normal
   - 12 and 24 Hour Test Signal
   - Abnormal Test Signal (per UL requirements)
   - EIA-485 Communications Failure
   - Phone Line Failure

6. The UDACT shall support independent zone/point reporting when used in the Contact ID format. In this format the UDACT shall support transmission of up to 2,040 points. This enables the central station to have exact details concerning the origin of the fire or response emergency.
7. AN IP Communicator option shall be available to interface to the UDACT and be capable of transmitting signals over the internet/intranet to a compatible receiver.

G. Door Holders. Finish shall be as selected by architect.

H. Field Wiring Terminal Blocks
For ease of service all panel I/O wiring terminal blocks shall be removable, plug-in types and have sufficient capacity for #18 to #12 AWG wire. Terminal blocks that are permanently fixed are not acceptable.

H. Control Modules or Relays
1. Provide fire alarm system control modules or relays that meet electrical requirements of electrical load controlled. Provide coil voltage and contacts as required for required control sequence.

2.5. SYSTEM COMPONENTS - ADDRESSABLE DEVICES

A. Addressable Devices - General

1. Addressable devices shall use simple to install and maintain decade, decimal address switches. Devices shall be capable of being set to an address in a range of 001 to 159.
2. Addressable devices, which use a binary-coded address setting method, such as a DIP-switch, are not an allowable substitute. Addressable devices that require the address be programmed using a special tool or programming utility are not an allowable substitute.
3. Detectors shall be intelligent (analog) and addressable, and shall connect with two wires to the fire alarm control panel Signaling Line Circuits.
4. Addressable smoke and thermal detectors shall provide dual alarm and power/polling LEDs. Both LEDs shall flash green under normal conditions, indicating that the detector is operational and in regular communication with the control panel, and both LEDs shall be placed into steady red illumination by the control panel, indicating that an alarm condition has been detected. If required, the LED flash shall have the ability to be removed from the system program. An output connection shall also be provided in the base to connect an external remote alarm LED.
5. The fire alarm control panel shall permit detector sensitivity adjustment through field programming of the system. The panel on a time-of-day basis shall automatically adjust sensitivity.
6. Using software in the FACP, detectors shall automatically compensate for dust accumulation and other slow environmental changes that may affect their performance. The detectors shall be listed by UL as meeting the calibrated sensitivity test requirements of NFPA Standard 72.
7. The detectors shall be ceiling-mount and shall include a separate twist-lock base with tamper proof feature. Base options shall include a sounder base with a built-in (local) sounder rated at 85 DBA minimum, a relay base and an isolator base designed for Style 7 applications.
8. The detectors shall provide a test means whereby they will simulate an alarm

condition and report that condition to the control panel. Such a test may be initiated at the detector itself (by activating a magnetic switch) or initiated remotely on command from the control panel.

9. Detectors shall also store an internal identifying type code that the control panel shall use to identify the type of device (ION, PHOTO, THERMAL).
10. Detectors will operate in an analog fashion, where the detector simply measures its designed environment variable and transmits an analog value to the FACP based on real-time measured values. The FACP software, not the detector, shall make the alarm/normal decision, thereby allowing the sensitivity of each detector to be set in the FACP program and allowing the system operator to view the current analog value of each detector.
11. Addressable devices shall store an internal identifying code that the control panel shall use to identify the type of device.
12. A magnetic test switch shall be provided to test detectors and modules. Detectors shall report an indication of an analog value reaching 100% of the alarm threshold.
13. Addressable modules shall mount in a 4-inch square (101.6 mm square), 2-1/8 inch (54 mm) deep electrical box. An optional surface mount Lexan enclosure shall be available.

B. Intelligent Photoelectric Smoke Detector

1. The detectors shall use the photoelectric (light-scattering) principal to measure smoke density and shall, on command from the control panel, send data to the panel representing the analog level of smoke density.

C. Intelligent Thermal Detectors

1. Thermal detectors shall be intelligent addressable devices rated at 135 degrees Fahrenheit (58 degrees Celsius) and have a rate-of-rise element rated at 15 degrees F (9.4 degrees C) per minute. It shall connect via two wires to the fire alarm control panel signaling line circuit.

D. Intelligent Duct Smoke Detector

1. The smoke detector housing shall accommodate either an intelligent ionization detector or an intelligent photoelectric detector, of that provides continuous analog monitoring and alarm verification from the panel.
2. When sufficient smoke is sensed, an alarm signal is initiated at the FACP, and appropriate action taken to change over air handling systems to help prevent the rapid distribution of toxic smoke and fire gases throughout the areas served by the duct system.

E. Two Wire Detector Monitor Module

1. Addressable monitor modules shall be provided to connect one supervised IDC zone of conventional 2-wire smoke detectors or alarm initiating devices (any N.O. dry contact device).
2. The IDC zone may be wired for Class A or B (Style D or Style B) operation. An LED shall be provided that shall flash under normal conditions, indicating that the monitor module is operational and in regular communication with the control panel.

3. For multiple 2-wire smoke detector circuit monitoring a module shall be available that provides 6 Style B or 3 Style D input circuits.

F. Addressable Control Module

1. Addressable control modules shall be provided to supervise and control the operation of one conventional NACs of compatible, 24 VDC powered, polarized audio/visual notification appliances.
2. The control module NAC may be wired for Style Z or Style Y (Class A/B) with a current rating of 2 Amps for Style Z and 3 Amps for Style Y. For speaker applications the module is rated for 50 watts at 25 or 70.7 Vrms.
3. Audio/visual power shall be provided by a separate supervised power circuit from the main fire alarm control panel or from a supervised UL listed remote power supply.
4. For multiple circuit control a module shall be available that provides 6 Style B or 3 Style D control circuits.

G. Addressable Releasing Control Module [Notapplicable only to projects. Refer to Construction Documents].

1. An addressable FlashScan releasing module shall be available to supervise and control compatible releasing agent solenoids.
2. The module shall operate on a redundant protocol for added protection.
3. The module shall be configurable for Style Z or Style Y (Class A/B) and support one 24 volt or two 12 volt solenoids.

H. Addressable Relay Module

1. Addressable Relay Modules shall be available for HVAC control and other building functions. The module shall provide two form C relays rated at up to 3 Amps resistive and up to 2.0 Amps inductive. The relay coil shall be magnetically latched to reduce wiring connection requirements, and to insure that 100% of all auxiliary devices energize at the same time on the same pair of wires.
2. For multiple relay control a module shall be available that provides 6 programmable Form-C relays.

2.6. BATTERIES:

A. The battery shall have sufficient capacity to power the fire alarm system for not less than twenty-four hours plus 5 minutes of alarm upon a normal AC power failure.
B. The batteries are to be completely maintenance free. No liquids are required. Fluid level checks for refilling, spills, and leakage shall not be required.
C. If necessary to meet standby requirements, external battery and charger systems may be used.

PART 3 - EXECUTION

3.1. INSTALLATION:

A. Installation shall be in accordance with the NEC, NFPA 72, local and state codes, as shown on the drawings, and as recommended by the major equipment manufacturer.

B. All conduit, junction boxes, conduit supports and hangers shall be concealed in finished areas and may be exposed in unfinished areas. Smoke detectors shall not be installed prior to the system programming and test period. If construction is ongoing during this period, measures shall be taken to protect smoke detectors from contamination and physical damage.
C. All fire detection and alarm system devices, control panels and remote annunciators shall be flush mounted when located in finished areas and may be surface mounted when located in unfinished areas.
D. Manual fire alarm boxes shall be suitable for surface mounting or semi-flush mounting as shown on the plans, and shall be installed not less than 42 inches (1067 mm), nor more than 48 inches (122 mm) above the finished floor.
E. Provide fire alarm system control wiring, and installation of fire alarm system relay or control modules where required to control fire smoke dampers, door holders, relief vents or other loads as indicated on construction documents. Where fire smoke dampers are shown, refer to mechanical plans and coordinate with mechanical contractor for quantities and locations.

3.2. TEST:
The service of a competent, factory-trained engineer or technician authorized by the manufacturer of the fire alarm equipment shall be provided to technically supervise and participate during all of the adjustments and tests for the system. All testing shall be in accordance with NFPA 72, Chapter 7.

A. Before energizing the cables and wires, check for correct connections and test for short circuits, ground faults, continuity, and insulation.
B. Close each sprinkler system flow valve and verify proper supervisory alarm at the FACP.
C. Verify activation of all water flow switches.
D. Open initiating device circuits and verify that the trouble signal actuates.
E. Open and short signaling line circuits and verify that the trouble signal actuates.
F. Open and short notification appliance circuits and verify that trouble signal actuates.
G. Ground all circuits and verify response of trouble signals.
H. Check presence and audibility of tone at all alarm notification devices.
I. Check installation, supervision, and operation of all intelligent smoke detectors using the walk test.
J. Each of the alarm conditions that the system is required to detect should be introduced on the system. Verify the proper receipt and the proper processing of the signal at the FACP and the correct activation of the control points.
K. When the system is equipped with optional features, the manufacturer's manual shall be consulted to determine the proper testing procedures. This is intended to address such items as verifying controls performed by individually addressed or grouped devices, sensitivity monitoring, verification functionality and similar.

3.3. FINAL INSPECTION:
A. At the final inspection, a factory-trained representative of the manufacturer of the major equipment shall demonstrate that the system functions properly in every respect.

3.4. INSTRUCTION:
A. Instruction shall be provided as required for operating the system. Hands-on demonstrations of the operation of all system components and the entire system including program changes and functions shall be provided.
B. The contractor and/or the systems manufacturer's representatives shall provide a

CJD Engineering LLC 2225 W. Chesterfield Blvd., Suite. 200 Springfield, MO 65807 (417) 877-1700 Fax: (417) 324-7735

typewritten "Sequence of Operation."

END OF SECTION

CJD Engineering LLC 2225 W. Chesterfield Blvd., Suite. 200 Springfield, MO 65807 (417) 877-1700 Fax: (417) 324-7735

SECTION 269300 – ELECTRICAL SYSTEMS COMMISSIONING

PART 1 - GENERAL

1.1 COMMISSIONING AGENCY

A. The commissioning agency (CA) will been contracted under the General Contractor for this project. The CA has overall responsibility for planning and coordinating the commissioning process. However, commissioning involves all parties to the design and construction process, including the mechanical contractor, and all specialty sub-contractors within the mechanical sections such as sheet metal, piping, refrigeration, water treatment, and controls, plus major equipment suppliers as required.

1.2 CONTRACTORS' RESPONSIBILITIES

A. The electrical division contractor's responsibilities are defined in Section 019113 of the specifications. These responsibilities apply to all specialty sub-contractors and major equipment suppliers within this division. Each contractor and supplier shall review Section 019113 and their bids shall include for carrying out the work described, as it applies to each Section within this division's specifications, individually and collectively.

PART 2 - PRODUCTS (NOT USED)

PART 3 - EXECUTION (NOT USED)

END OF SECTION 269300

CJD Engineering LLC 2225 W. Chesterfield Blvd., Suite. 200 Springfield, MO 65807 (417) 877-1700 Fax: (417) 324-7735

SECTION 27 0000 – COMMUNICATIONS – GENERAL REQUIREMENTS

PART 1 GENERAL

1.1 QUALITY ASSURANCE

A. All structure cabling components (Belden Cat 6 and Corning OS2) shall be installed by certified contractors authorized to issue a 25-year system warranty.

B. All audiovisual systems shall be installed and commissioned by:
   1. A CTS-I (Certified Technology Specialist – Installation) certified technician responsible for system integration and field installation.
   2. A Crestron-certified programmer who is a direct employee (on staff) of the audiovisual contractor and will be responsible for programming, commissioning, and post-installation support of Crestron control systems.

C. The AV integrator shall demonstrate relevant project experience and submit resumes and certifications of key personnel with submittals.

D. All structured cabling installation must be overseen by a BICSI-certified technician (e.g., RCDD, Technician level 2, or equivalent) to ensure compliance with industry best practices and standards.

PART 2 GENERAL (NOT USED)

PART 3 EXECUTION (NOT USED)

END OF SECTION

SECTION 27 1000 – STRUCTURED CABLING

PART 1 GENERAL

1.1 SUBMITTALS

A. See Section 01 3000 – Administrative Requirements, for submittal procedures.
B. Product Data: Provide manufacturer's standard catalog pages and data sheets for each product.
C. Shop Drawings: Show compliance with requirements on isometric schematic diagram of network layout, showing cable routings, telecommunications closets, rack and enclosure layouts and locations, service entrance, and grounding.
D. Operation and Maintenance Data: List of all components with part numbers, sources of supply, and operation and maintenance instructions; include copy of project record documents.

1.2 WARRANTY

A. See Section 01 7800 – Closeout Submittals, for additional warranty requirements.
B. Correct defective work within a 2 year period after Date of Substantial Completion.

PART 2 PRODUCTS

2.1 CABLING

A. Horizontal Cabling (Copper).
    1. Manufacturer: Belden.
    2. Cable: Belden Category 6 UTP, 23 AWG, CMP-rated (example: Belden 2412 series or equivalent).
    3. Performance: Compliant with ANSI/TIA-568.2-D.
    4. Terminations: Belden Cat 6-rated modular jacks and patch panels.
    5. Connectors: LC only, ceramic ferrule, factory-terminated and polished.
B. Warranty.
    1. The structured cabling system shall be covered under:
        a. Belden 25-Year IBDN System Warranty (copper).
        b. Corning 25-Year Extended Warranty Program (fiber).
    2. Warranty shall include:
        a. Standards-based performance compliance (TIA, IEEE).
        b. Application support for 1G/10G/40G Ethernet and singlemode WDM systems.
        c. Labor and materials coverage for certified system repairs.

PART 3 EXECUTION

3.1 INSTALLATION – GENERAL

A. Comply with Communication Service Provider requirements.
B. Grounding and Bonding: Perform in accordance with TIA-607 and NFPA 70.
    1. Manufacturer: Belden.

3.2 INSTALLATION OF PATHWAYS

A. Install Pathways with the following minimum clearances:
    1. 48 inches from motors, generators, frequency converters, transformers, x-ray equipment and uninterruptible power systems.
    2. 12 inches from power conduits and cables and panelboards.
    3. 5 inches from fluorescent and high frequency lighting fixtures.
    4. 6 inches from flues, hot water pipes, and steam pipes.
B. Minimum Cover – Underground Service Entrance: Comply with NFPA 70 and Communications Service Provider requirements.

3.3 DOCUMENTATION

A. Submit complete fiber and copper test reports (Tier 1 for OS2 fiber; ANSI/TIA for Cat 6).
B. Provide final as-built drawings showing fiber routing, panel ID, cable numbering, and connector type.

C. Include Belden and Corning warranty registration certificates and confirmation certified installation status at project completion, including pathways, device locations, and labelling schemes.

END OF SECTION

SECTION 27 4100 – AUDIOVISUAL SYSTEMS

PART 1 GENERAL

1.1 GENERAL REQUIRMENTS

A. The AV integrator shall be a company with a minimum of 5 years experience in commercial AV system deployment.
B. The integrator shall:
   1. Employ at least one CTS-I certified installer actively involved in the project.
   2. Employ at least one Crestron Certified Programmer (Silver or higher preferred), not subcontracted, responsible for all Crestron programming deliverables.
   3. Be an authorized reseller / integrator for all core AV products provided.
C. The AV integrator shall demonstrate relevant project experience and submit resumes and certifications of key personnel with submittals.
D. All structured cabling installation must be overseen by a BICSI-certified technician (e.g., RCDD, Technician level 2, or equivalent) to ensure compliance with industry best practices and standards.

1.2 QUALITY ASSURANCE

A. Parts listed shall be complete, type numbers accurate and equipment furnished shall conform to manufacturer's specifications.
B. All materials shall be new and shall conform to applicable provisions of Underwriters Laboratories and the American Standards Association.
C. Comply with federal, state and local labor regulations and applicable union regulations.

PART 2 PRODUCTS

2.1 AV CONTROL AND SIGNAL MANAGMENT

A. Provide and configure a fully integrated AV control system (e.g., Crestron, AMX, or Owner-approved equivalent).
B. Control system must support:
   1. Resource switching.
   2. Room scheduling (if applicable)
   3. AV over IP and centralized control where required.
C. System must be programmed by the on-staff Crestron programming using SIMPL or VC-4, and must follow Owner-approved user interface design standards.

2.2 PROGRAMMING AND COMMISSIONING

A. Control systems must be fully commissioned and tested by the AV contractor's Crestron Certified Programmer.
B. All DSPs (e.g., Biamp, QSC, BSS) must be tuned by manufacturer-certified personnel.
C. Provide final source code, touchpanel UI files, and network device configuration backups as part of close-out.
D. Allow for two rounds, minimum, of revisions after initial programming to accommodate Owner feedback.

PART 3 EXECUTION

3.1 TESTING AND ACCEPTANCE

A. AV contractor must demonstrate that all installed AV systems perform to specification, including:
   1. Signal switching and distribution.
   2. Touchpanel control and responsiveness
   3. Audio intelligibility and video resolution.
B. Functional testing shall be observed and approved by the Owner's representative.
C. Submit a commissioning report signed by the CTS-I installer and Crestron programmer certifying system completion.

D. Provide complete audiovisual as-built documentation at project completion, including device layouts, signal flow diagrams, IP addressing schemes, control system architecture and final programming files.

3.2 USER TRAINING

A. Contractor will provide in-depth training in operation and regular maintenance of all systems and on all equipment included in the scope of work.

B. Training to include, but not limited to:
   1. Detailed operation of mixing consoles, video switchers and routers, computer control systems and other essential system elements as relevant to their installation.
   2. Maintenance and repair of system equipment including replacement procedures for user replaceable parts.
   3. Review of Operation and Maintenance Manual.

C. Contractor will provide a minimum of two training sessions for four hours each with times and dates to be approved by the Owner.

D. If the Systems Designer, and/or Owner judge any work to be deficient and/or not substantially complete at the scheduled time for training, the training will be postponed until the Systems Designer, and Owner judge the entire AV system conforms to the design intent drawings and this specification.

E. Contractor will bear any costs incurred for additional Systems Designer's time and expenses due to failure to have the system functioning in accordance with specification requirements at the times scheduled for User training.

END OF SECTION

SECTION 311000 - SITE CLEARING

PART 1 - GENERAL

1.1 RELATED DOCUMENTS

A. Drawings and general provisions of the Contract, including General and Supplementary Conditions and Division 01 Specification Sections, apply to this Section.

1.2 SUMMARY

A. This Section includes the following:

1. Protecting existing trees and vegetation to remain.
2. Removing existing trees and vegetation.
3. Clearing and grubbing.
4. Stripping and stockpiling topsoil.
5. Removing above-grade and below-grade site improvements.
6. Disconnecting, capping or sealing, and abandoning site utilities in place.
7. Temporary erosion and sedimentation control measures.

B. Related Sections include the following:

1. Division 01 Section "Temporary Facilities and Controls" for temporary utilities, temporary construction and support facilities, temporary security and protection facilities.
2. Division 01 Section "Execution" for verifying utility locations and for recording field measurements.
3. Division 31 Section "Earth Moving" for soil materials, excavating, backfilling, and site grading.

1.3 DEFINITIONS

A. Topsoil: Natural or cultivated surface-soil layer containing organic matter and sand, silt, and clay particles; friable, pervious, and black or a darker shade of brown, gray, or red than underlying subsoil; reasonably free of subsoil, clay lumps, gravel, and other objects more than 2 inches in diameter; and free of subsoil and weeds, roots, toxic materials, or other nonsoil materials.

B. Tree Protection Zone: Area surrounding individual trees or groups of trees to be protected during construction, and defined by the drip line of individual trees or the perimeter drip line of groups of trees, unless otherwise indicated.

1.4 MATERIAL OWNERSHIP

A. Except for stripped topsoil or other materials indicated to remain Owner's property, cleared materials shall become Contractor's property and shall be removed from Project site.

1.5 SUBMITTALS

A. Prior to commencing work the Contractor must submit photographs or videotape, sufficiently detailed, of existing conditions of trees and plantings, adjoining construction, and site improvements that might be misconstrued as damage caused by site clearing.

B. Record drawings, according to Division 01 Section "Contract Closeout."
   1. Coordinate with Owner to identify and accurately locate capped utilities and other subsurface structural, electrical, and mechanical conditions.

1.6 QUALITY ASSURANCE

A. Preinstallation Conference: Conduct conference at Project site to comply with requirements in Division 01 Section "Project Management."

1.7 PROJECT CONDITIONS

A. Traffic: Minimize interference with adjoining roads, streets, walks, and other adjacent occupied or used facilities during site-clearing operations.

   1. Do not close or obstruct streets, walks, or other adjacent occupied or used facilities without permission from Owner and authorities having jurisdiction.
   2. Provide alternate routes around closed or obstructed traffic ways if required by Owner and/or authorities having jurisdiction.

B. Improvements on Adjoining Property: Authority for performing site clearing indicated on property adjoining Owner's property shall be obtained by Owner before beginning of said work.

   1. Do not proceed with work on adjoining property until directed by Owner.

C. Salvable Improvements: Carefully remove items indicated to be salvaged and store on Owner's premises where indicated.

D. Utility Locator Service: Notify utility locator service for area where Project is located before site clearing.

E. Do not commence site clearing operations until temporary erosion and sedimentation control measures are in place.

PART 2 - PRODUCTS

2.1 SOIL MATERIALS

A. Satisfactory Soil Materials: Requirements for satisfactory soil materials are specified in Division 31 Section "Earth Moving."

1. Obtain approved borrow soil materials off-site when satisfactory soil materials are not available on-site.

PART 3 - EXECUTION

3.1 PREPARATION

A. Protect and maintain benchmarks and survey control points from disturbance during construction.

B. Provide erosion-control measures to prevent soil erosion and discharge of soil-bearing water runoff or airborne dust to adjacent properties and walkways.

C. Locate and clearly flag trees and vegetation to remain or to be relocated.

D. Protect existing site improvements to remain from damage during construction.

1. Restore damaged improvements to their original condition, as acceptable to Owner.

3.2 TEMPORARY EROSION AND SEDIMENTATION CONTROL

A. Provide temporary erosion and sedimentation control measures to prevent soil erosion and discharge of soil-bearing water runoff or airborne dust to adjacent properties and walkways, according to the Missouri DNR Land Disturbance Permit criteria. See plans and project SWPPP for additional requirements.

B. Contractor shall be fully responsible for continued monitoring until such time the Missouri DNR Land Disturbance Permit has been terminated.

C. Repair, and maintain erosion and sedimentation control measures during construction until permanent vegetation has been established in accordance with Owner provided inspections.

D. Remove erosion and sedimentation controls and restore and stabilize areas disturbed during removal.

E. Contractor shall not proceed with installation of erosion and sedimentation control measures on adjacent properties not owned by the Owner until directed to do so by the Owner.

3.3 TREE PROTECTION

A. Mark and identify drip line of individual trees or around perimeter drip line of groups of trees to remain. Remove fence when construction is complete.

1. Do not store construction materials, debris, or excavated material within fenced area.
2. Do not permit vehicles, equipment, or foot traffic within fenced area.
3. Maintain fenced area free of weeds and trash.

B. Do not excavate within tree protection zones, unless otherwise indicated.

C. Where excavation for new construction is required within drip line of trees, hand clear and excavate to minimize damage to root systems. Use narrow-tine spading forks, comb soil to expose roots, and cleanly cut roots as close to excavation as possible.

1. Cover exposed roots with burlap and water regularly.
2. Temporarily support and protect roots from damage until they are permanently redirected and covered with soil.
3. Coat cut faces of roots more than 1-1/2 inches in diameter with an emulsified asphalt or other approved coating formulated for use on damaged plant tissues.
4. Cover exposed roots with wet burlap to prevent roots from drying out. Backfill with soil as soon as possible.

D. Repair or replace trees and vegetation indicated to remain that are damaged by construction operations, in a manner approved by Owner.
1. Replace trees that cannot be repaired and restored to full-growth status, as determined by Landscape Architect.

3.4 UTILITIES

A. Contractor will arrange for disconnecting and sealing indicated utilities, as preapproved by the owner that serve existing structures before site clearing, when requested by Contractor.

1. Verify that utilities have been disconnected and capped before proceeding with site clearing.

B. Contractor shall locate, identify, disconnect, and seal or cap off utilities indicated to be removed.

1. Arrange with utility companies to shut off indicated utilities.

C. Existing Utilities: Do not interrupt utilities serving facilities occupied by Owner or others unless permitted under the following conditions and then only after arranging to provide temporary utility services according to requirements indicated:

1. Notify Architect not less than 14 days in advance of proposed utility interruptions.
2. Do not proceed with utility interruptions without Owner's written permission.

D. Excavate for and remove underground utilities indicated to be removed. Coordinate with Divisions 21, 22, 23, 26, 27, and 28 Sections.

3.5 CLEARING AND GRUBBING

A. Remove obstructions, trees, shrubs, grass, and other vegetation to permit installation of new construction. Removal includes digging out stumps and obstructions and grubbing roots.

1. Do not remove trees, shrubs, and other vegetation indicated to remain or to be relocated.
2. Cut minor roots and branches of trees indicated to remain in a clean and careful manner where such roots and branches obstruct installation of new construction.
3. Completely remove stumps roots, obstructions, and debris extending to a depth of 18 inches below exposed subgrade.
4. Use only hand methods for grubbing within tree protection zone.

5. Contractor shall be responsible for removal of cleared/grubbed material. If material is to be burned onsite, Contractor shall obtain any required permits necessary by the Village of Airport Drive.

B. Fill depressions caused by clearing and grubbing operations with satisfactory soil material unless further excavation or earthwork is indicated.

1. Place fill material in horizontal layers not exceeding a loose depth of 8 inches and compact each layer to a density equal to adjacent original ground.

3.6 TOPSOIL STRIPPING

A. Remove sod and grass before stripping topsoil.

B. Strip topsoil to whatever depths are encountered in a manner to prevent intermingling with underlying subsoil or other waste materials.

1. Remove subsoil and nonsoil materials from topsoil, including trash, debris, rock, weeds, roots, and other waste materials.

C. Stockpile topsoil materials away from edge of excavations without intermixing with subsoil. Grade and shape stockpiles to drain surface water. Cover to prevent windblown dust.

1. Limit height of topsoil stockpiles as directed by Owner and/or authorities having jurisdiction.
2. Do not stockpile topsoil within drip line of trees to remain.
3. Dispose of excess topsoil as specified for waste material disposal.
4. Stockpile surplus topsoil to allow for respreading. At completion of Mass Grading, stripped topsoil shall be redistributed in all areas not specified to receive other surfaces to a minimum depth of 4 inches unless specified otherwise the by the Landscape Architect.

3.7 SITE IMPROVEMENTS

A. Remove existing above-grade and below-grade improvements as indicated and as necessary to facilitate new construction.

B. Remove slabs, paving, curbs, gutters, and aggregate base as indicated.

1. Unless existing full-depth joints coincide with line of demolition, neatly saw-cut length of existing pavement to remain before removing existing pavement. Saw-cut faces vertically.

3.8 DISPOSAL

A. Disposal: Remove surplus soil material, unsuitable topsoil, obstructions, demolished materials, and waste materials including trash and debris, and legally dispose of them off Owner's property.

END OF SECTION 311000

SECTION 312000 - EARTH MOVING

PART 1 - GENERAL

1.1 RELATED DOCUMENTS

A. Drawings and general provisions of the Contract, including General and Supplementary Conditions and Division 01 Specification Sections, apply to this Section.

B. Geotechnical Study prepared for this project. If conflicts arise between the Specifications and the Geotechnical Study, the Engineer shall be contacted prior to construction.

C. Regulatory authority's rules, regulations and specifications apply to this section.

1.2 SUMMARY

A. This Section includes the following:

1. Preparing subgrades for slabs-on-grade, walks, pavements, lawns and grasses, and plantings.
2. Excavating and backfilling for buildings and structures.
3. Drainage course for slabs-on-grade.
4. Subbase course for concrete walks, pavements.
5. Subbase course for asphalt paving.
6. Excavating and backfilling for trenches within building lines.
7. Excavating and backfilling trenches for buried mechanical and electrical utilities and pits for buried utility structures.

B. Related Sections include the following:

1. Division 01 Section "Unit Prices" for a schedule of unit prices.
2. Division 01 Section "Construction Facilities and Temporary Controls."
3. Division 31 Section "Site Clearing" for site stripping, grubbing, removal topsoil, and protective trees to remain.
4. Division 31 Section "Dewatering" for lowering and disposing of ground water during construction.
5. Division 03 Section "Cast-in-Place Concrete" for granular course over vapor retarder.
6. Divisions 21, 22, 23, 26, 27, 28 Sections for excavating and backfilling buried mechanical and electrical utilities and buried utility structures.

1.3 UNIT PRICES

A. Rock Measurement: Volume of rock actually removed, measured in original position, but not to exceed the following.

1. 24 inches outside of concrete forms other than at footings.
2. 12 inches outside of concrete forms at footings.
3. 6 inches of minimum required dimensions of concrete cast against grade.
4. Outside dimensions of concrete walls indicated to be cast against rock without forms or exterior waterproofing treatments.
5. 6 inches beneath bottom of concrete slabs-on-grade.
6. 6 inches beneath pipe in trenches, and the greater of 24 inches wider than pipe or 42 inches.

B. Unit prices for rock excavation include replacement with approved materials.

1.4 DEFINITIONS

A. Backfill: Soil material used to fill an excavation.

1. Initial Backfill: Backfill placed beside and over pipe in a trench, including haunches to support sides of pipe.
2. Final Backfill: Backfill placed over initial backfill to fill a trench.

B. Base Course: Layer placed between the subbase course and asphalt paving.

C. Bedding Course: Layer placed over the excavated subgrade in a trench before laying pipe.

D. Borrow Soil: Suitable soil imported from off-site for use as fill or backfill.

E. Drainage Course: Layer supporting the slab-on-grade used to minimize upward capillary flow of pore water.

F. Excavation: Removal of material encountered above subgrade elevations.

1. Authorized Additional Excavation: Excavation below subgrade elevations as directed by Architect. Additional excavation and replacement material will be paid for according to Contract provisions for changes in the Work.
2. Bulk Excavation: Excavation more than 10 feet in width and more than 30 feet in length.
3. Unauthorized Excavation: Excavation below subgrade elevations or beyond indicated lines and dimensions without direction by Architect. Unauthorized excavation, as well as remedial work directed by Architect, shall be without additional compensation.

G. Fill: Soil materials used to raise existing grades.

H. LVC: Low Volume Change Material.

I. Rock: Rock material in beds, ledges, unstratified masses, conglomerate deposits, and boulders of rock material 3/4 cu. yd. or more in volume that exceed a standard penetration resistance of 100 blows/2 inches when tested by an independent geotechnical testing agency, according to ASTM D 1586.

J. Structures: Buildings, footings, foundations, retaining walls, slabs, tanks, curbs, mechanical and electrical appurtenances, or other man-made stationary features constructed above or below the ground surface.

K. Subbase Course: Course placed between the subgrade and base course for asphalt pavement, or course placed between the subgrade and a cement concrete pavement or a cement concrete or walk.

L. Subgrade: Surface or elevation remaining after completing excavation, or top surface of a fill or backfill immediately below subbase, drainage fill, or topsoil materials.

M. Utilities: On-site underground pipes, conduits, ducts, and cables, as well as underground services within buildings.

1.5 SUBMITTALS

A. Product Data: For the following:

1. Each type of plastic warning tape.
2. Drainage fabric
3. Separation fabric

B. Material Test Reports: From a qualified testing agency indicating and interpreting test results for compliance of the following with requirements indicated:

1. Classification according to ASTM D 2487 of each on-site or borrow soil material proposed for fill and backfill.

2. Laboratory compaction curve according to ASTM D 1557 for each on-site or borrow soil material proposed for fill and backfill.

C. Pre-excavation Photographs or Videotape: Show existing conditions of adjoining construction and site improvements, including finish surfaces that might be misconstrued as damage caused by earthwork operations. Submit before earthwork begins.

1.6 QUALITY ASSURANCE

A. Blasting: Is not allowed

B. Geotechnical Testing Agency Qualifications: An independent testing agency qualified according to ASTM E 329 to conduct soil materials and rock-definition testing, as documented according to ASTM D 3740 and ASTM E 548.

C. Pre-excavation Conference: Conduct conference at Project site to comply with requirements in Division 01 Section "Project Meetings."

1.7 PROJECT CONDITIONS

A. Existing Utilities: Do not interrupt utilities serving facilities occupied by Owner or others unless permitted in writing by Owner and then only after arranging to provide temporary utility services according to requirements indicated.

1. Notify Owner not less than 14 days in advance of proposed utility interruptions.

2. Do not proceed with utility interruptions without Owner's written permission.
3. Contact utility-locator specified, as specified by Owner, for area where Project is located before excavating.

B. Demolish and completely remove from site existing underground utilities indicated to be removed. Coordinate with utility companies to shut off services if lines are active.

C. Dust Control –
1. Minimize the amount of time the site is left cut or exposed, plan earth moving works so they are completed just prior to the time they are needed.
2. Observe weather conditions and do not commence or continue earthmoving works if conditions are unsuitable.
3. Reduce off-site hauling via balanced cut and fill procedures.
4. Pre-water, if possible, the areas marked for disturbance and the material that is being moved.

D. Dust Control – Site Traffic Control:
1. Provide directions and instructions relating to traffic movement within the site:
2. Post signage, erect fencing and place barriers to direct traffic.
3. Designate specific routes for hauling and access.
4. Allocate off-site parking with on-site access only under special circumstances.
5. Restrict public access onto the construction site when earthwork is exposed to traffic.
6. Set and enforce a maximum speed limit, e.g. 10mph.

PART 2 - PRODUCTS

2.1 SOIL MATERIALS

A. General: Provide borrow soil materials when sufficient suitable soil materials are not available from excavations.

B. Suitable Soils: As identified in the Geotechnical Report

C. Unsuitable Soils: As identified in the Geotechnical Report

D. LVC: As identified in the Geotechnical Report.

E. Backfill and Fill: Suitable soil materials.

F. Base Course: MoDOT Type 5

G. Engineered Fill: As identified in the Geotechnical Report

H. Bedding Course: Naturally or artificially graded mixture of natural or crushed gravel, crushed stone, and natural or crushed sand; ASTM D 2940; except with 100 percent passing a 1-inch sieve and not more than 8 percent passing a No. 200 sieve.

I. Drainage Fill: ASTM C-33, #57 Stone

J. Sand: ASTM C 33; fine aggregate, natural, or manufactured sand.

K. Impervious Fill: Clayey gravel and sand mixture capable of compacting to a dense state.

L. Borrow Material: As identified in the Geotechnical Report.

2.2 GEOTEXTILES

1. As specified on the plans

2.3 CONTROLLED LOW-STRENGTH MATERIAL

A. Controlled Low-Strength Material: Low-density, self-compacting, flowable concrete material as follows:

1. Portland Cement: ASTM C 150, Type I.
2. Fly Ash: ASTM C 618, Class C or F.
3. Normal-Weight Aggregate: ASTM C 33, 3/8-inch nominal maximum aggregate size.
4. Foaming Agent: ASTM C 869.
5. Water: ASTM C 94/C 94M.
6. Air-Entraining Admixture: ASTM C 260.

B. Produce low-density, controlled low-strength material with the following physical properties:

1. As-Cast Unit Weight: 30 to 36 lb/cu. Ft at point of placement, when tested according to ASTM C 138/C 138M.
2. Compressive Strength: 80 psi, when tested according to ASTM C 495.

C. Produce conventional-weight, controlled low-strength material with 80-psi compressive strength when tested according to ASTM C 495.

2.4 ACCESSORIES

A. Detectable Warning Tape: Acid- and alkali-resistant polyethylene film warning tape manufactured for marking and identifying underground utilities, a minimum of 6 inches wide and 4 mils thick, continuously inscribed with a description of the utility, with metallic core encased in a protective jacket for corrosion protection, detectable by metal detector when tape is buried up to 30 inches deep; colored as follows:

1. Red: Electric.
2. Yellow: Gas, oil, steam, and dangerous materials.
3. Orange: Telephone and other communications.
4. Blue: Water systems.
5. Green: Sewer systems.

PART 3 - EXECUTION

3.1 PREPARATION

A. Protect structures, utilities, sidewalks, pavements, and other facilities from damage caused by settlement, lateral movement, undermining, washout, and other hazards created by earthwork operations.

B. Protect subgrades and foundation soils against freezing temperatures or frost. Provide protective insulating materials as necessary.

C. Provide erosion-control measures to prevent erosion of displacement of soils and discharge of soil-bearing water runoff or airborne dust to adjacent properties and walkways.

D. Prior to placing fill, existing vegetation and root mat should be removed. Complete stripping of the topsoil should be performed in the proposed building and parking/driveway areas.

3.2 DEWATERING

A. Prevent surface water and ground water from entering excavations, from ponding on prepared subgrades, and from flooding Project site and surrounding area.

B. Protect subgrades from softening, undermining, washout, and damage by rain or water accumulation.

1. Reroute surface water runoff away from excavated areas. Do not allow water to accumulate in excavations. Do not use excavated trenches as temporary drainage ditches.

3.3 EXPLOSIVES

A. Explosives: Not allowed

3.4 EXCAVATION, GENERAL

A. Assume Over-Excavation: Refer to the geotechnical report for areas to be over-excavated to remove uncontrolled or unsuitable soils.

B. Classified Excavation: Excavate to subgrade elevations. Material to be excavated will be classified as earth and rock. Do not excavate rock until it has been classified and cross sectioned by Architect. The Contract Sum will be adjusted for rock excavation according to unit prices included in the Contract Documents. Changes in the Contract Time may be authorized for rock excavation.

1. Earth excavation includes excavating pavements and obstructions visible on surface; underground structures, utilities, and other items indicated to be removed; together with soil, boulders, and other materials not classified as rock or unauthorized excavation.
   a. Intermittent drilling; blasting, if permitted; ram hammering; or ripping of material not classified as rock excavation is earth excavation.

2. Rock excavation includes removal and disposal of rock. Remove rock to lines and subgrade elevations indicated to permit installation of permanent construction without exceeding the following dimensions:
   a. 24 inches outside of concrete forms other than at footings.
   b. 12 inches outside of concrete forms at footings.
   c. 6 inches outside of minimum required dimensions of concrete cast against grade.
   d. Outside dimensions of concrete walls indicated to be cast against rock without forms or exterior waterproofing treatments.
   e. 6 inches beneath bottom of concrete slabs-on-grade.
   f. 6 inches beneath pipe in trenches, and the greater of 24 inches wider than pipe or 42 inches wide.

3.5 EXCAVATION FOR STRUCTURES

A. Excavate to indicated elevations and dimensions within a tolerance of plus or minus 1 inch. If applicable, extend excavations a sufficient distance from structures for placing and removing concrete formwork, for installing services and other construction, and for inspections.

1. Excavations for Footings and Foundations: Do not disturb bottom of excavation. Excavate by hand to final grade just before placing concrete reinforcement. Trim bottoms to required lines and grades to leave solid base to receive other work.
2. Pile Foundations: Stop excavations 6 to 12 inches above bottom of pile cap before piles are placed. After piles have been driven, remove loose and displaced material. Excavate to final grade, leaving solid base to receive concrete pile caps.
3. Excavation for Underground Tanks, Basins, and Mechanical or Electrical Utility Structures: Excavate to elevations and dimensions indicated within a tolerance of plus or minus 1 inch. Do not disturb bottom of excavations intended as bearing surfaces.

3.6 EXCAVATION FOR WALKS AND PAVEMENTS

A. Excavate surfaces under walks and pavements to indicated lines, cross sections, elevations, and subgrades.

1. Excavation of existing undocumented fill will be required. At least 12” of LVC as defined by the Geotechnical Report shall be placed directly below the pavement within all fill sections.

3.7 EXCAVATION FOR UTILITY TRENCHES

A. Excavate trenches to indicated gradients, lines, depths, and elevations.

1. Beyond building perimeter, excavate trenches to allow installation of top of pipe below frost line.

B. Excavate trenches to uniform widths to provide the following clearance on each side of pipe or conduit. Excavate trench walls vertically from trench bottom to 12 inches higher than top of pipe or conduit, unless otherwise indicated.

1. Clearance: As indicated.

C. Trench Bottoms: Excavate trenches 4 inches deeper than bottom of pipe elevation to allow for bedding course. Hand excavate for bell of pipe.
   1. Excavate trenches 6 inches deeper than elevation required in rock or other unyielding bearing material to allow for bedding course.

3.8 SUBGRADE INSPECTION

A. Notify Architect when excavations have reached required subgrade.

B. If Architect determines that unsuitable soil is present, continue excavation and replace with compacted backfill or fill material as directed.
   1. Additional excavation and replacement material will be paid for according to Contract provisions for changes in the Work.

C. Proof-roll subgrade with heavy pneumatic-tired equipment to identify soft pockets and areas of excess yielding. Do not proof-roll wet or saturated subgrades.

D. Reconstruct subgrades damaged by freezing temperatures, frost, rain, accumulated water, or construction activities, as directed by Architect/Engineer.

3.9 UNAUTHORIZED EXCAVATION

A. Fill unauthorized excavation under foundations or wall footings by extending bottom elevation of concrete foundation or footing to excavation bottom, without altering top elevation. Lean concrete fill may be used when approved by Architect.

   1. Fill unauthorized excavations under other construction or utility pipe as directed by Architect.

3.10 STORAGE OF SOIL MATERIALS

A. Stockpile borrow soil materials and excavated suitable soil materials without intermixing. Place, grade, and shape stockpiles to drain surface water. Cover to prevent windblown dust.

   1. Stockpile soil materials away from edge of excavations. Do not store within drip line of remaining trees.

3.11 BACKFILL

A. Place and compact backfill in excavations promptly, but not before completing the following:

   1. Construction below finish grade including, where applicable, subdrainage, dampproofing, waterproofing, and perimeter insulation.
   2. Surveying locations of underground utilities for Record Documents.
   3. Testing and inspecting underground utilities.
   4. Removing concrete formwork.
   5. Removing trash and debris.
   6. Removing temporary shoring and bracing, and sheeting.

7. Installing permanent or temporary horizontal bracing on horizontally supported walls.

B. Place backfill on subgrades free of mud, frost, snow, or ice.

3.12 UTILITY TRENCH BACKFILL

A. Place backfill on subgrades free of mud, frost, snow, or ice.

B. Place and compact bedding course on trench bottoms and where indicated. Shape bedding course to provide continuous support for bells, joints, and barrels of pipes and for joints, fittings, and bodies of conduits.

C. Backfill trenches excavated under footings and within 18 inches of bottom of footings with concrete to elevation of bottom of footings. Concrete is specified in Section 033000 “Cast-in-Place Concrete.”

D. Utility trenches that penetrate beneath the building should be sealed to restrict water intrusion and flow through the trench. A lean clay “plug” shall be installed at or above the soil’s optimum water content. The “plug” shall extend at least 5 feet out from the face of the building exterior.

E. Provide 4-inch-thick, concrete-base slab support for piping or conduit less than 30 inches below surface of roadways. After installing and testing, completely encase piping or conduit in a minimum of 4 inches of concrete before backfilling or placing roadway subbase.

F. Place and compact initial backfill of subbase material, free of particles larger than 1 inch in any dimension, to a height of 12 inches over the utility pipe or conduit.

1. Carefully compact initial backfill under pipe haunches and compact evenly up on both sides and along the full length of utility piping or conduit to avoid damage or displacement of piping or conduit. Coordinate backfilling with utilities testing.

G. Controlled Low-Strength Material: Place initial backfill of controlled low-strength material to a height of 12 inches over the utility pipe or conduit.

H. Backfill voids with suitable soil while installing and removing shoring and bracing.

I. Place and compact final backfill of suitable soil to final subgrade elevation.

J. Controlled Low-Strength Material: Place final backfill of controlled low-strength material to final subgrade elevation.

K. Install warning tape directly above utilities, 12 inches below finished grade, except 6 inches below subgrade under pavements and slabs.

3.13 FILL

A. Refer to the Geotechnical Report for requirements for fill placement and allowable fill materials.

B. Low Volume Change (LVC) material shall be, at least 24-inches in depth, placed beneath the building floor slab and shall extend at least 60-inches outside of the building footprint. Refer to the Geotechnical Report for acceptable LVC materials.

C. Plow, scarify, bench, or break up sloped surfaces steeper than 1 vertical to 4 horizontal so fill material will bond with existing material.

D. Place and compact fill material in layers to required elevations as follows:

1. Under grass and planted areas, use suitable soil material.
2. Under walks and pavements, use suitable soil material.
3. Under steps and ramps, use engineered fill.
4. Under building slabs, use engineered fill.
5. Under footings and foundations, use engineered fill.

E. Place fill on subgrades free of mud, frost, snow, or ice.

3.14 MOISTURE CONTROL

A. Uniformly moisten or aerate subgrade and each subsequent fill or backfill soil layer before compaction to within limits identified in the geotechnical report.

1. Do not place backfill or fill soil material on surfaces that are muddy, frozen, or contain frost or ice.
2. Remove and replace, or scarify and air dry otherwise suitable soil material that exceeds optimum moisture and is too wet to compact to specified dry unit weight.

3.15 COMPACTION OF SOIL BACKFILLS AND FILLS

A. Place backfill and fill soil materials in layers not more than 8 inches in loose depth for material compacted by heavy compaction equipment, and not more than 6 inches in loose depth for material compacted by hand-operated tampers.

B. Place backfill and fill soil materials evenly on all sides of structures to required elevations, and uniformly along the full length of each structure.

C. Compact soil materials to not less than the following percentages of maximum dry unit weight according to ASTM D 1557:

1. Under structures, building slabs, steps, and pavements, scarify and recompact top 12 inches of existing subgrade and each layer of backfill or fill soil material at 95 percent.
2. Under walkways, scarify and recompact top 6 inches below subgrade and compact each layer of backfill or fill soil material at 95 percent.
3. Under lawn or unpaved areas, scarify and recompact top 6 inches below subgrade and compact each layer of backfill or fill soil material at 90 percent.
4. For utility trenches, compact each layer of initial and final backfill soil material at 90 percent.

3.16 GRADING

A. General: Uniformly grade areas to a smooth surface, free of irregular surface changes. Comply with compaction requirements and grade to cross sections, lines, and elevations indicated.

1. Provide a smooth transition between adjacent existing grades and new grades.
2. Cut out soft spots, fill low spots, and trim high spots to comply with required surface tolerances.

B. Mass Grading: Slope grades to direct water away from buildings and to prevent ponding. Finish subgrades as indicated on plans.

3.17 SUBSURFACE DRAINAGE

A. Subsurface Drain: As specified on the plans

3.18 SUBBASE AND BASE COURSES

A. Under pavements and walks, place subbase course on prepared subgrade and as follows:

1. Place base course material over subbase.
2. Place base course material over subbase course under hot-mix asphalt pavement.
3. Shape subbase and base course to required crown elevations and cross-slope grades.
4. When thickness of compacted subbase or base course is 6 inches or less, place materials in a single layer.
5. Compact subbase and base course at optimum moisture content to required grades, lines, cross sections, and thickness to not less than 95 percent of maximum dry unit weight according to ASTM D 1557.

3.19 DRAINAGE COURSE

A. Place drainage course on subgrades free of mud, frost, snow, or ice.

B. Under cast-in-place concrete slabs-on-grade, place drainage course on prepared subgrade and as follows:

1. When compacted thickness of drainage course is 6 inches or less, place materials in single layer.

2. When compacted thickness of drainage course exceeds 6 inches, place materials in equal layers, with no layer more than 6 inches thick or less than 3 inches thick when compacted.
3. Compact each layer of drainage course to required cross sections and thicknesses to not less than 95 percent (or as recommended in the Geotechnical Report) of maximum dry unit weight according to ASTM D 698.

3.20 FIELD QUALITY CONTROL

A. Testing Agency: Owner will engage a qualified independent geotechnical engineering testing agency to perform field quality-control testing.

B. Allow testing agency to inspect and test subgrades and each fill or backfill layer. Proceed with subsequent earthwork only after test results for previously completed work comply with requirements.

C. Footing Subgrade: At footing subgrades, at least one test of each soil stratum will be performed to verify design bearing capacities. Subsequent verification and approval of other footing subgrades may be based on a visual comparison of subgrade with tested subgrade when approved by Architect.

D. Testing agency will test compaction of soils in place according to ASTM D 1556, ASTM D 2167, ASTM D 2922, and ASTM D 2937, as applicable. Tests will be performed at the following locations and frequencies:

1. Paved and Building Slab Areas: At subgrade and at each compacted fill and backfill layer, at least 1 test for every 2500 sq. ft. or less of paved area or building slab, but in no case fewer than 3 tests per lift.
2. Foundation Wall Backfill: At each compacted backfill layer, at least 1 test for each 100 feet or less of wall length, but no fewer than 2 tests.
3. Trench Backfill: At each compacted initial and final backfill layer, at least 1 test for each 300 feet or less of trench length, but no fewer than 2 tests.

E. When testing agency reports that subgrades, fills, or backfills have not achieved degree of compaction specified, scarify and moisten or aerate, or remove and replace soil to depth required; recompact and retest until specified compaction is obtained.

3.21 PROTECTION

A. Protecting Graded Areas: Protect newly graded areas from traffic, freezing, and erosion. Keep free of trash and debris.

B. Repair and reestablish grades to specified tolerances where completed or partially completed surfaces become eroded, rutted, settled, or where they lose compaction due to subsequent construction operations or weather conditions.

1. Scarify or remove and replace soil material to depth as directed by Architect; reshape and recompact.

C. Where settling occurs before Project correction period elapses, remove finished surfacing, backfill with additional soil material, compact, and reconstruct surfacing.

1. Restore appearance, quality, and condition of finished surfacing to match adjacent work, and eliminate evidence of restoration to greatest extent possible.

3.22 DISPOSAL OF SURPLUS AND WASTE MATERIALS

A. Disposal: Remove surplus suitable soil and waste material, including unsuitable soil, trash, and debris, and legally dispose of it off Owner's property, unless specified otherwise by potential bid alternates.

END OF SECTION 312000

SECTION 321216 - ASPHALT PAVING

PART 1 - GENERAL

1.1 RELATED DOCUMENTS

A. Drawings and general provisions of the Contract, including General and Supplementary Conditions and Division 01 Specification Sections, apply to this Section.

1.2 SUMMARY

A. Section Includes:

1. Cold milling of existing hot-mix asphalt pavement.
2. Hot-mix asphalt patching.
3. Hot-mix asphalt paving.
4. Asphalt surface treatments.
5. Pavement-marking paint.

B. Related Sections:
1. Division 31 Section "Earth Moving" for aggregate subbase and base courses and for aggregate pavement shoulders.
2. Division 32 Sections for other paving installed as part of crosswalks in asphalt pavement areas.
3. Division 32 Section "Concrete Paving Joint Sealants" for joint sealants and fillers at paving terminations.

1.3 DEFINITION

A. Hot-Mix Asphalt Paving Terminology: Refer to ASTM D 8 for definitions of terms.

1.4 SUBMITTALS

A. Product Data: For each type of product indicated. Include technical data and tested physical and performance properties.

1. Job-Mix Designs: Certification, by authorities having jurisdiction, of approval of each job mix proposed for the Work.
2. Job-Mix Designs: For each job mix proposed for the Work.

B. Qualification Data: For qualified manufacturer.

C. Material Certificates: For each paving material from manufacturer.

D. Material Test Reports: For each paving material.

1.5 QUALITY ASSURANCE

A. Manufacturer Qualifications: A paving-mix manufacturer registered with and approved by the DOT of state in which Project is located.

B. Testing Agency Qualifications: Qualified according to ASTM D 3666 for testing indicated.

C. Regulatory Requirements: Comply with materials, workmanship, and other applicable requirements of the DOT of state in which Project is located for asphalt paving work.

1. Measurement and payment provisions and safety program submittals included in standard specifications do not apply to this Section.

D. Preinstallation Conference: Conduct conference at Project site.

1. Review methods and procedures related to hot-mix asphalt paving including, but not limited to, the following:

a. Review proposed sources of paving materials, including capabilities and location of plant that will manufacture hot-mix asphalt.
b. Review condition of subgrade and preparatory work.
c. Review requirements for protecting paving work, including restriction of traffic during installation period and for remainder of construction period.
d. Review and finalize construction schedule and verify availability of materials, Installer's personnel, equipment, and facilities needed to make progress and avoid delays.

1.6 DELIVERY, STORAGE, AND HANDLING

A. Deliver pavement-marking materials to Project site in original packages with seals unbroken and bearing manufacturer's labels containing brand name and type of material, date of manufacture, and directions for storage.

B. Store pavement-marking materials in a clean, dry, protected location within temperature range required by manufacturer. Protect stored materials from direct sunlight.

1.7 PROJECT CONDITIONS

A. Environmental Limitations: Do not apply asphalt materials if subgrade is wet or excessively damp, if rain is imminent or expected before time required for adequate cure, or if the following conditions are not met:
1. Tack Coat: Minimum surface temperature of 40 deg F.
2. Slurry Coat: Comply with weather limitations in ASTM D 3910.
3. Asphalt Base Course: Minimum surface temperature of 40 deg F (4.4 deg C) and rising at time of placement.
4. Asphalt Surface Course: Minimum surface temperature of 60 deg F (15.6 deg C) at time of placement.

B. Pavement-Marking Paint: Proceed with pavement marking only on clean, dry surfaces and at a minimum ambient or surface temperature of 40 deg F (4.4 deg C) for oil-based materials 55 deg F (12.8 deg C) for water-based materials, and not exceeding 95 deg F (35 deg C).

PART 2 - PRODUCTS

2.1 AGGREGATES

A. General: Use materials and gradations that have performed satisfactorily in previous installations.

B. Coarse Aggregate: AASHTO T92 (50% loss max), AASHTO T85 (4% adsorption max) and sound; angular crushed stone, crushed gravel, or cured, crushed blast-furnace slag.

C. Fine Aggregate: Sharp-edged natural sand or sand prepared from stone, gravel, cured blast-furnace slag, or combinations thereof in accordance with MODOT specifications.

1. For hot-mix asphalt, limit natural sand to a maximum of 20 percent by weight of the total aggregate mass.

D. Mineral Filler: Rock or limestone dust, hydraulic cement, or other inert material meeting AASHTO T37 and conforming to the following gradation:

Passing No. 30 Sieve	100
Passing No. 50 Sieve	95-100
Passing No. 100 Sieve	90-100
Passing No. 200 Sieve	70-100

2.2 ASPHALT MATERIALS

A. Asphalt Binder: AASHTO M 320 or AASHTO MP 1a, PG 64-22

B. Asphalt Cement: ASTM D 3381 for viscosity-graded material.

C. Tack Coat: AASHTO M 140 emulsified asphalt, or AASHTO M 208 cationic emulsified asphalt, slow setting, diluted in water, of suitable grade and consistency for application. Grade SS-1 or SS-1H.

D. Fog Seal: AASHTO M 140 emulsified asphalt, or AASHTO M 208 cationic emulsified asphalt, slow setting, factory diluted in water, of suitable grade and consistency for application.

E. Water: Potable.

F. Undersealing Asphalt: ASTM D 3141, pumping consistency.

2.3 AUXILIARY MATERIALS

A. Sand: AASHTO M 29, Grade Nos. 2 or 3.

B. Paving Geotextile: AASHTO M 288, nonwoven polypropylene; resistant to chemical attack, rot, and mildew; and specifically designed for paving applications.

C. Joint Sealant: ASTM D 6690 Type II hot-applied, single-component, polymer-modified bituminous sealant.

D. Pavement-Marking Paint: Alkyd-resin type, lead and chromate free, ready mixed, complying with AASHTO M 248, Type N; colors complying with FS TT-P-1952.

1. Color: White: Chip # 37925

   Yellow: Chip # 33538

E. Glass Beads: AASHTO M 247, Type 1.

F. Wheel Stops: As specified on the plans

2.4 MIXES

A. Hot-Mix Asphalt: Dense, hot-laid, hot-mix asphalt plant mixes approved by MoDOT.

1. Provide mixes with a history of satisfactory performance in geographical area where Project is located.
2. Provide mixes complying with composition, grading, and tolerance requirements in ASTM D 3515 for the following nominal, maximum aggregate sizes:

   a. Asphaltic Base Course: MoDOT Base

   b. Asphaltic Surface Course: MoDOT BP-2

B. Emulsified-Asphalt Slurry: ASTM D 3910, Grad SS-1 or SS-1H.

PART 3 - EXECUTION

3.1 EXAMINATION

A. Verify that subgrade is dry and in suitable condition to begin paving.

B. Proof-roll subgrade below pavements with heavy pneumatic-tired equipment to identify soft pockets and areas of excess yielding. Do not proof-roll wet or saturated subgrades.

1. Completely proof-roll subgrade in one direction, repeating proof-rolling in direction perpendicular to first direction. Limit vehicle speed to 3 mph (5 km/h).
2. Proof roll with a loaded 10-wheel, tandem-axle dump truck weighing not less than 15 tons (13.6 tonnes).
3. Excavate soft spots, unsatisfactory soils, and areas of excessive pumping or rutting, as determined by Architect, and replace with compacted backfill or fill as directed.

C. Proceed with paving only after unsatisfactory conditions have been corrected.

D. Verify that utilities, traffic loop detectors, and other items requiring a cut and installation beneath the asphalt surface have been completed and that asphalt surface has been repaired flush with adjacent asphalt prior to beginning installation of imprinted asphalt.

3.2 COLD MILLING

A. Clean existing pavement surface of loose and deleterious material immediately before cold milling. Remove existing asphalt pavement by cold milling to grades and cross sections indicated.

1. Mill to a depth of 1-1/2 inches (38 mm).
2. Mill to a uniform finished surface free of excessive gouges, grooves, and ridges.
3. Control rate of milling to prevent tearing of existing asphalt course.
4. Repair or replace curbs, manholes, and other construction damaged during cold milling.
5. Excavate and trim unbound-aggregate base course, if encountered, and keep material separate from milled hot-mix asphalt.
6. Transport milled hot-mix asphalt to asphalt recycling facility.
7. Keep milled pavement surface free of loose material and dust.

3.3 PATCHING

A. Hot-Mix Asphalt Pavement: Saw cut perimeter of patch and excavate existing pavement section to sound base. Excavate rectangular or trapezoidal patches, extending 12 inches (300 mm) into adjacent sound pavement, unless otherwise indicated. Cut excavation faces vertically. Remove excavated material. Recompact existing unbound-aggregate base course to form new subgrade.

B. Tack Coat: Apply uniformly to vertical surfaces abutting or projecting into new, hot-mix asphalt paving at a rate of 0.05 to 0.15 gal./sq. yd. (0.2 to 0.7 L/sq. m).

1. Allow tack coat to cure undisturbed before applying hot-mix asphalt paving.
2. Avoid smearing or staining adjoining surfaces, appurtenances, and surroundings. Remove spillages and clean affected surfaces.

C. Patching: Fill excavated pavements with hot-mix asphalt base mix for full thickness of patch and, while still hot, compact flush with adjacent surface.

D. Patching: Partially fill excavated pavements with hot-mix asphalt base mix and, while still hot, compact. Cover asphalt base course with compacted, hot-mix surface layer finished flush with adjacent surfaces.

3.4 REPAIRS

A. Leveling Course: Install and compact leveling course consisting of hot-mix asphalt surface course to level sags and fill depressions deeper than 1 inch (25 mm) in existing pavements.

1. Install leveling wedges in compacted lifts not exceeding 3 inches (75 mm) thick.

B. Crack and Joint Filling: Remove existing joint filler material from cracks or joints to a depth of 1/2 inch (12 mm).

1. Clean cracks and joints in existing hot-mix asphalt pavement.
2. Use emulsified-asphalt slurry to seal cracks and joints less than 1/4 inch (6 mm) wide. Fill flush with surface of existing pavement and remove excess.
3. Use hot-applied joint sealant to seal cracks and joints more than 1/4 inch (6 mm) wide. Fill flush with surface of existing pavement and remove excess.

3.5 SURFACE PREPARATION

A. General: Immediately before placing asphalt materials, remove loose and deleterious material from substrate surfaces. Ensure that prepared subgrade is ready to receive paving.

B. Tack Coat: Apply uniformly to surfaces of existing pavement at a rate of 0.05 to 0.15 gal./sq. yd. (0.2 to 0.7 L/sq. m).

1. Allow tack coat to cure undisturbed before applying hot-mix asphalt paving.
2. Avoid smearing or staining adjoining surfaces, appurtenances, and surroundings. Remove spillages and clean affected surfaces.

3.6 PAVING GEOTEXTILE INSTALLATION

1. Section not used.

3.7 HOT-MIX ASPHALT PLACING

A. Machine place hot-mix asphalt on prepared surface, spread uniformly, and strike off. Place asphalt mix by hand to areas inaccessible to equipment in a manner that prevents segregation of mix. Place each course to required grade, cross section, and thickness when compacted.

1. Place hot-mix asphalt base course in number of lifts and thicknesses indicated.
2. Place hot-mix asphalt surface course in single lift.
3. Spread mix at minimum temperature of 250 deg F (121 deg C).
4. Begin applying mix along centerline of crown for crowned sections and on high side of one-way slopes unless otherwise indicated.
5. Regulate paver machine speed to obtain smooth, continuous surface free of pulls and tears in asphalt-paving mat.

B. Place paving in consecutive strips not less than 10 feet (3 m) wide unless infill edge strips of a lesser width are required.

1. After first strip has been placed and rolled, place succeeding strips and extend rolling to overlap previous strips. Complete a section of asphalt base course before placing asphalt surface course.

C. Promptly correct surface irregularities in paving course behind paver. Use suitable hand tools to remove excess material forming high spots. Fill depressions with hot-mix asphalt to prevent segregation of mix; use suitable hand tools to smooth surface.

3.8 JOINTS

A. Construct joints to ensure a continuous bond between adjoining paving sections. Construct joints free of depressions, with same texture and smoothness as other sections of hot-mix asphalt course.

1. Clean contact surfaces and apply tack coat to joints.
2. Offset longitudinal joints, in successive courses, a minimum of 6 inches (150 mm).
3. Offset transverse joints, in successive courses, a minimum of 24 inches (600 mm).

4. Construct transverse joints at each point where paver ends a day's work and resumes work at a subsequent time. Construct these joints using either "bulkhead" or "papered" method according to AI MS-22, for both "Ending a Lane" and "Resumption of Paving Operations."
5. Compact joints as soon as hot-mix asphalt will bear roller weight without excessive displacement.
6. Compact asphalt at joints to a density within 2 percent of specified course density.

3.9 COMPACTION

A. General: Begin compaction as soon as placed hot-mix paving will bear roller weight without excessive displacement. Compact hot-mix paving with hot, hand tampers or with vibratory-plate compactors in areas inaccessible to rollers.

1. Complete compaction before mix temperature cools to 185 deg F (85 deg C).

B. Breakdown Rolling: Complete breakdown or initial rolling immediately after rolling joints and outside edge. Examine surface immediately after breakdown rolling for indicated crown, grade, and smoothness. Correct laydown and rolling operations to comply with requirements.

C. Intermediate Rolling: Begin intermediate rolling immediately after breakdown rolling while hot-mix asphalt is still hot enough to achieve specified density. Continue rolling until hot-mix asphalt course has been uniformly compacted to the following density:

1. Average Density: 96 percent of reference laboratory density according to AASHTO T 245, but not less than 94 percent nor greater than 100 percent.
2. Average Density: 92 percent of reference maximum theoretical density according to ASTM D 2041, but not less than 90 percent nor greater than 96 percent.

D. Finish Rolling: Finish roll paved surfaces to remove roller marks while hot-mix asphalt is still warm.

E. Edge Shaping: While surface is being compacted and finished, trim edges of pavement to proper alignment. Bevel edges while asphalt is still hot; compact thoroughly.

F. Repairs: Remove paved areas that are defective or contaminated with foreign materials and replace with fresh, hot-mix asphalt. Compact by rolling to specified density and surface smoothness.

G. Protection: After final rolling, do not permit vehicular traffic on pavement until it has cooled and hardened.

H. Erect barricades to protect paving from traffic until mixture has cooled enough not to become marked.

3.10 ASPHALT CURBS

A. Section not used

3.11 ASPHALT TRAFFIC-CALMING DEVICES

A. Section not used

3.12 INSTALLATION TOLERANCES

A. Pavement Thickness: Compact each course to produce the thickness indicated within the following tolerances:

1. Base Course: Plus or minus 1/2 inch (13 mm).
2. Surface Course: Plus 1/4 inch (6 mm), no minus.

B. Pavement Surface Smoothness: Compact each course to produce a surface smoothness within the following tolerances as determined by using a 10-foot (3-m) straightedge applied transversely or longitudinally to paved areas:

1. Base Course: 1/4 inch (6 mm).
2. Surface Course: 1/8 inch (3 mm).
3. Crowned Surfaces: Test with crowned template centered and at right angle to crown. Maximum allowable variance from template is 1/4 inch (6 mm).

C. Traffic-Calming Devices: Compact and form asphalt to produce the contour indicated and within a tolerance of plus or minus 1/8 inch (3 mm) of height indicated above pavement surface.

3.13 SURFACE TREATMENTS

A. Fog Seals: Apply fog seal at a rate of 0.10 to 0.15 gal./sq. yd. (0.45 to 0.7 L/sq. m) to existing asphalt pavement and allow to cure. With fine sand, lightly dust areas receiving excess fog seal.

B. Slurry Seals: Apply slurry coat in a uniform thickness according to ASTM D 3910 and allow to cure.

1. Roll slurry seal to remove ridges and provide a uniform, smooth surface.

3.14 PAVEMENT MARKING

A. Do not apply pavement-marking paint until layout, colors, and placement have been verified with Architect.

B. Allow paving to age for 28 days before starting pavement marking.

C. Sweep and clean surface to eliminate loose material and dust.

D. Apply paint with mechanical equipment to produce pavement markings, of dimensions indicated, with uniform, straight edges. Apply at manufacturer's recommended rates to provide a minimum wet film thickness of 15 mils (0.4 mm).

1. Broadcast glass beads uniformly into wet pavement markings at a rate of 6 lb/gal. (0.72 kg/L).

3.15 WHEEL STOPS

A. Securely attach wheel stops to pavement with not less than two galvanized-steel dowels embedded at one-quarter to one-third points. Securely install dowels into pavement and bond to wheel stop. Recess head of dowel beneath top of wheel stop.

3.16 PREFORMED TRAFFIC-CALMING DEVICES

A. Section not used

3.17 FIELD QUALITY CONTROL

A. Testing Agency: Owner will engage a qualified testing agency to perform tests and inspections.

B. Thickness: In-place compacted thickness of hot-mix asphalt courses will be determined according to ASTM D 3549.

C. Surface Smoothness: Finished surface of each hot-mix asphalt course will be tested for compliance with smoothness tolerances.

D. In-Place Density: Testing agency will take samples of uncompacted paving mixtures and compacted pavement according to AASHTO T 168.

1. Reference maximum theoretical density will be determined by averaging results from four samples of hot-mix asphalt-paving mixture delivered daily to site, prepared according to ASTM D 2041, and compacted according to job-mix specifications.
2. In-place density of compacted pavement will be determined by testing core samples according to ASTM D 1188 or ASTM D 2726.

    a. One core sample will be taken for every 1000 sq. yd. (836 sq. m) or less of installed pavement, with no fewer than 3 cores taken.
    b. Field density of in-place compacted pavement may also be determined by nuclear method according to ASTM D 2950 and correlated with ASTM D 1188 or ASTM D 2726.

E. Replace and compact hot-mix asphalt where core tests were taken.

F. Remove and replace or install additional hot-mix asphalt where test results or measurements indicate that it does not comply with specified requirements.

3.18 DISPOSAL

A. Except for material indicated to be recycled, remove excavated materials from Project site and legally dispose of them in an EPA-approved landfill.

1. Do not allow milled materials to accumulate on-site.

END OF SECTION 321216

SECTION 321313 - CONCRETE PAVING

PART 1 - GENERAL

1.1 RELATED DOCUMENTS

A. Drawings and general provisions of the Contract, including General and Supplementary Conditions and Division 01 Specification Sections, apply to this Section.

1.2 SUMMARY

A. This Section includes exterior cement concrete pavement for the following:

1. Driveways and roadways.
2. Parking lots.
3. Curbs and gutters.
4. Walkways.
5. Unit paver base.

B. Related Sections include the following:

1. Division 03 Section "Cast-in-Place Concrete" for general building applications of concrete.
2. Division 31 Section "Earth Moving" for subgrade preparation, grading, and subbase course.
3. Division 32 Section "Decorative Concrete Paving" for surface-imprinted, stamped finished concrete pavement.
4. Division 32 Section "Concrete Paving Joint Sealants" for joint sealants of joints in concrete pavement and at isolation joints of concrete pavement with adjacent construction.

1.3 DEFINITIONS

A. Cementitious Materials: Per MoDOT Specifications

1.4 SUBMITTALS

A. Product Data: For each type of manufactured material and product indicated.

B. Concrete Pavement Joint Plan: Contractor shall submit to the Engineer for approval proposed jointing plan. Plan shall be submitted no later than 4 weeks prior to concrete pavement placement. Plan shall include proposed location of all construction, isolation, and contraction joints.

C. Design Mixtures: For each concrete pavement mixture. Include alternate mixture designs when characteristics of materials, Project conditions, weather, test results, or other circumstances warrant adjustments.

D. Material Test Reports: From a qualified testing agency indicating and interpreting test results for compliance of the following with requirements indicated, based on comprehensive testing of current materials:

1. Aggregates. Include service record data indicating absence of deleterious expansion of concrete due to alkali-aggregate reactivity.

E. Material Certificates: Signed by manufacturers certifying that each of the following materials complies with requirements:

1. Cementitious materials.
2. Steel reinforcement and reinforcement accessories.
3. Fiber reinforcement.
4. Admixtures.
5. Curing compounds.
6. Bonding agent or epoxy adhesive.
7. Joint fillers.

F. Minutes of preinstallation conference.

1.5 QUALITY ASSURANCE

A. Manufacturer Qualifications: Manufacturer of ready-mixed concrete products who complies with ASTM C 94/C 94M requirements for production facilities and equipment.

1. Manufacturer certified according to NRMCA's "Certification of Ready Mixed Concrete Production Facilities."

B. Testing Agency Qualifications: An independent agency qualified according to ASTM C 1077 and ASTM E 329 for testing indicated, as documented according to ASTM E 548.

1. Personnel conducting field tests shall be qualified as ACI Concrete Field Testing Technician, Grade 1, according to ACI CP-01 or an equivalent certification program.

C. ACI Publications: Comply with ACI 301, "Specification for Structural Concrete," unless modified by requirements in the Contract Documents.

D. Concrete Testing Service: The owner will engage a qualified independent testing agency to perform material evaluation tests and to design concrete mixtures.

E. Preinstallation Conference: Conduct conference at Project site to comply with requirements in Division 01 Section "Project Management and Coordination."

1. Before submitting design mixtures, review concrete pavement mixture design and examine procedures for ensuring quality of concrete materials and concrete pavement construction practices. Require representatives, including the following, of each entity directly concerned with concrete pavement, to attend conference:

a. Contractor's superintendent.

b. Independent testing agency responsible for concrete design mixtures.
c. Ready-mix concrete producer.
d. Concrete pavement subcontractor.

1.6 PROJECT CONDITIONS

A. Traffic Control: Maintain access for vehicular and pedestrian traffic as required for other construction activities.

PART 2 - PRODUCTS

2.1 MANUFACTURERS

A. In other Part 2 articles where titles below introduce lists, the following requirements apply to product selection:

1. Available Products: Subject to compliance with requirements, products that may be incorporated into the Work include, but are not limited to, products specified.
2. Products: Subject to compliance with requirements, provide one of the products specified.
3. Available Manufacturers: Subject to compliance with requirements, manufacturers offering products that may be incorporated into the Work include, but are not limited to, manufacturers specified.
4. Manufacturers: Subject to compliance with requirements, provide products by one of the manufacturers specified.

2.2 FORMS

A. Form Materials: Plywood, metal, metal-framed plywood, or other approved panel-type materials to provide full-depth, continuous, straight, smooth exposed surfaces.

1. Use flexible or curved forms for curves with a radius 100 feet (30.5 m) or less.

B. Form-Release Agent: Commercially formulated form-release agent that will not bond with, stain, or adversely affect concrete surfaces and will not impair subsequent treatments of concrete surfaces.

2.3 STEEL REINFORCEMENT

A. Reinforcing Bars: ASTM A 615/A 615M, Grade 60 (Grade 420); deformed.

B. Joint Dowel Bars: Plain steel bars, ASTM A 615/A 615M, Grade 60 (Grade 420). Cut bars true to length with ends square and free of burrs.

C. Bar Supports: Bolsters, chairs, spacers, and other devices for spacing, supporting, and fastening reinforcing bars, welded wire reinforcement, and dowels in place. Manufacture bar supports according

to CRSI's "Manual of Standard Practice" from steel wire, plastic, or precast concrete of greater compressive strength than concrete, and as follows:

1. Equip wire bar supports with sand plates or horizontal runners where base material will not support chair legs.
2. For epoxy-coated reinforcement, use epoxy-coated or other dielectric-polymer-coated wire bar supports.

2.4 CONCRETE MATERIALS

A. Cementitious Material: Use the following cementitious materials, of the same type, brand, and source throughout the Project:

1. Portland Cement: ASTM C 150, Type I, gray. Fly Ash or Blast Furnace Slag blends per MoDOT Specifications

B. Normal-Weight Aggregates: ASTM C 33, coarse aggregate, uniformly graded. Provide aggregates from a single source with documented MoDOT inspection record.

1. Maximum Coarse-Aggregate Size: 3/4 inch (19 mm) nominal.
2. Fine Aggregate: Free of materials with deleterious reactivity to alkali in cement.

C. Exposed Aggregate: Selected, hard, and durable; washed; free of materials with deleterious reactivity to cement or that cause staining; from a single source, with gap-graded coarse aggregate as follows:

1. Aggregate Sizes: 1/2 to 3/4 inch (13 to 19 mm) nominal.
2. Aggregate Source, Shape, and Color: As determined by the architect.

D. Water: ASTM C 94/C 94M.

E. Air-Entraining Admixture: ASTM C 260.

F. Chemical Admixtures: Provide admixtures certified by manufacturer to be compatible with other admixtures and to contain not more than 0.1 percent water-soluble chloride ions by mass of cementitious material.

1. Water-Reducing Admixture: ASTM C 494/C 494M, Type A.
2. Retarding Admixture: ASTM C 494/C 494M, Type B.
3. Water-Reducing and Retarding Admixture: ASTM C 494/C 494M, Type D.
4. High-Range, Water-Reducing Admixture: ASTM C 494/C 494M, Type F.
5. High-Range, Water-Reducing and Retarding Admixture: ASTM C 494/C 494M, Type G.
6. Plasticizing and Retarding Admixture: ASTM C 1017/C 1017M, Type II.

2.5 FIBER REINFORCEMENT

A. Synthetic Fiber: When shown on the drawings provide Monofilament or fibrillated polypropylene fibers engineered and designed for use in concrete pavement, complying with ASTM C 1116, Type III, 1/2 to 1-1/2 inches (13 to 38 mm) long.

1. Available Products:

   a. Monofilament Fibers:

      1) Axim Concrete Technologies; Fibrasol IIP.
      2) Euclid Chemical Company (The); Fiberstrand 100.
      3) FORTA Corporation; Forta Mono.
      4) Grace, W. R. & Co.--Conn.; Grace MicroFiber.
      5) Metalcrete Industries; Polystrand 1000.
      6) SI Concrete Systems; Fibermix Stealth.

2.6 CURING MATERIALS

A. Absorptive Cover: AASHTO M 182, Class 2, burlap cloth made from jute or kenaf, weighing approximately 9 oz./sq. yd. (305 g/sq. m) dry.

B. Moisture-Retaining Cover: ASTM C 171, polyethylene film or white burlap-polyethylene sheet.

C. Water: Potable.

D. Evaporation Retarder: Waterborne, monomolecular film forming; manufactured for application to fresh concrete.

   1. Available Products:

      a. Axim Concrete Technologies; Cimfilm.
      b. Burke by Edeco; BurkeFilm.
      c. ChemMasters; Spray-Film.
      d. Conspec Marketing & Manufacturing Co., Inc.; Aquafilm.
      e. Dayton Superior Corporation; Sure Film.
      f. Euclid Chemical Company (The); Eucobar.
      g. Kaufman Products, Inc.; Vapor Aid.
      h. Lambert Corporation; Lambco Skin.
      i. L&M Construction Chemicals, Inc.; E-Con.
      j. MBT Protection and Repair, ChemRex Inc.; Confilm.
      k. Meadows, W. R., Inc.; Sealtight Evapre.
      l. Metalcrete Industries; Waterhold.
      m. Nox-Crete Products Group, Kinsman Corporation; Monofilm.
      n. Sika Corporation, Inc.; SikaFilm.
      o. Symons Corporation; Finishing Aid.
      p. Vexcon Chemicals, Inc.; Certi-Vex EnvioAssist.

E. White Waterborne Membrane-Forming Curing Compound: ASTM C 309, Type 2, Class B.

   1. Available Products:

      a. Anti-Hydro International, Inc.; AH Curing Compound #2 WP WB.
      b. Burke by Edoco; Resin Emulsion White.
      c. ChemMasters; Safe-Cure 2000.

d. Conspec Marketing & Manufacturing Co., Inc.; W.B. Resin Cure.
e. Dayton Superior Corporation; Day-Chem White Pigmented Cure (J-10-W).
f. Euclid Chemical Company (The); Kurez VOX White Pigmented.
g. Kaufman Products, Inc.; Thinfilm 450.
h. Lambert Corporation; Aqua Kure-White.
i. L&M Construction Chemicals, Inc.; L&M Cure R-2.
j. Meadows, W. R., Inc.; 1200-White.
k. Symons Corporation; Resi-Chem White.
l. Tamms Industries, Inc.; Horncure 200-W.
m. Unitex; Hydro White.
n. Vexcon Chemicals, Inc.; Certi-Vex Enviocure White 100.

2.7 RELATED MATERIALS

A. Expansion- and Isolation-Joint-Filler Strips: ASTM D 1751, asphalt-saturated cellulosic fiber.

B. Color Pigment: Refer to the plans and manufactures specifications

C. Slip-Resistive Aggregate Finish: Section not used

D. Bonding Agent: ASTM C 1059, Type II, non-redispersible, acrylic emulsion or styrene butadiene.

E. Epoxy Bonding Adhesive: ASTM C 881, two-component epoxy resin, capable of humid curing and bonding to damp surfaces, of class suitable for application temperature and of grade to requirements, and as follows:

1. Types IV and V, load bearing, for bonding hardened or freshly mixed concrete to hardened concrete.

F. Chemical Surface Retarder: Water-soluble, liquid-set retarder with color dye, for horizontal concrete surface application, capable of temporarily delaying final hardening of concrete to a depth of 1/8 to 1/4 inch (3 to 6 mm).

1. Available Products:

a. Burke by Edeco; True Etch Surface Retarder.
b. ChemMasters; Exposee.
c. Conspec Marketing & Manufacturing Co., Inc.; Delay S.
d. Euclid Chemical Company (The); Surface Retarder S.
e. Kaufman Products, Inc.; Expose.
f. Metalcrete Industries; Surftard.
g. Nox-Crete Products Group, Kinsman Corporation; Crete-Nox TA.
h. Scofield, L. M. Company; Lithotex.
i. Sika Corporation, Inc.; Rugasol-S.
j. Vexcon Chemicals, Inc.; Certi-Vex Envioset.

2.8 PAVEMENT MARKINGS

A. Pavement-Marking Paint: Alkyd-resin type, lead and chromate free, ready mixed, complying with FS TT-P-115, Type II or AASHTO M 248, Type N.

B. Glass Beads: AASHTO M 247, Type 1.

2.9 WHEEL STOPS

A. Wheel Stops: Precast, air-entrained concrete, 3500-psi (17.2-MPa) minimum compressive strength. See plans for size and shape

2.10 CONCRETE MIXTURES

A. Prepare design mixtures, proportioned according to ACI 301, for each type and strength of normal-weight concrete determined by either laboratory trial mixes or field experience.

1. Use a qualified independent testing agency for preparing and reporting proposed concrete mixture designs for the trial batch method.

B. Proportion mixtures to provide normal-weight concrete with the following properties:

1. Mix design shall correspond to MoDOT Pavement Concrete, air-entrained.

C. Add air-entraining admixture at manufacturer's prescribed rate to result in normal-weight concrete at point of placement having an air content as follows:

1. Air Content: 6.5 percent plus or minus 1.5 percent.

D. Limit water-soluble, chloride-ion content in hardened concrete to 0.15 percent by weight of cement.

E. Chemical Admixtures: Use admixtures according to manufacturer's written instructions.

1. Use plasticizing and retarding admixture in concrete, as required, for placement and workability.
2. Use water-reducing and retarding admixture when required by high temperatures, low humidity, or other adverse placement conditions.

F. Cementitious Materials: Limit percentage, by weight, of cementitious materials other than portland cement according to ACI 301 requirements for concrete exposed to deicing chemicals.] as follows:

1. Fly Ash or Pozzolan: Per MoDOT Specifications

2.11 CONCRETE MIXING

A. Ready-Mixed Concrete: Measure, batch, and mix concrete materials and concrete according to ASTM C 94/C 94M and ASTM C 1116. Furnish batch certificates for each batch discharged and used in the Work.

1. When air temperature is between 85 deg F (30 deg C) and 90 deg F (32 deg C), reduce mixing and delivery time from 1-1/2 hours to 75 minutes; when air temperature is above 90 deg F (32 deg C), reduce mixing and delivery time to 60 minutes.

B. Project-Site Mixing: Measure, batch, and mix concrete materials and concrete according to ASTM C 94/C 94M. Mix concrete materials in appropriate drum-type batch machine mixer.

1. For concrete mixes of 1 cu. yd. (0.76 cu. m) or smaller, continue mixing at least 1-1/2 minutes, but not more than 5 minutes after ingredients are in mixer, before any part of batch is released.
2. For concrete mixes larger than 1 cu. yd. (0.76 cu. m), increase mixing time by 15 seconds for each additional 1 cu. yd. (0.76 cu. m).
3. Provide batch ticket for each batch discharged and used in the Work, indicating Project identification name and number, date, mixture type, mixing time, quantity, and amount of water added.

PART 3 - EXECUTION

3.1 EXAMINATION

A. Examine exposed subgrades and subbase surfaces for compliance with requirements for dimensional, grading, and elevation tolerances.

B. Proof-roll prepared subbase surface below concrete pavements with heavy pneumatic-tired equipment to identify soft pockets and areas of excess yielding.

1. Completely proof-roll subbase in one direction and repeat in perpendicular direction. Limit vehicle speed to 3 mph (5 km/h).
2. Proof-roll with a loaded 10-wheel tandem-axle dump truck weighing not less than 15 tons (13.6 tonnes).
3. Subbase with soft spots and areas of pumping or rutting exceeding depth of 1 (26 mm) require correction according to requirements in Division 31 Section "Earth Moving."

C. Proceed with concrete pavement operations only after nonconforming conditions have been corrected and subgrade is ready to receive pavement.

3.2 PREPARATION

A. Remove loose material from compacted subbase surface immediately before placing concrete.

3.3 EDGE FORMS AND SCREED CONSTRUCTION

A. Set, brace, and secure edge forms, bulkheads, and intermediate screed guides for pavement to required lines, grades, and elevations. Install forms to allow continuous progress of work and so forms can remain in place at least 24 hours after concrete placement.

B. Clean forms after each use and coat with form-release agent to ensure separation from concrete without damage.

3.4 STEEL REINFORCEMENT

A. General: Comply with CRSI's "Manual of Standard Practice" for fabricating, placing, and supporting reinforcement.

B. Clean reinforcement of loose rust and mill scale, earth, ice, or other bond-reducing materials.

C. Arrange, space, and securely tie bars and bar supports to hold reinforcement in position during concrete placement. Maintain minimum cover to reinforcement.

D. Install welded wire reinforcement in lengths as long as practicable. Lap adjoining pieces at least one full mesh, and lace splices with wire. Offset laps of adjoining widths to prevent continuous laps in either direction.

3.5 JOINTS

A. General: Form construction, isolation, and contraction joints and tool edgings true to line with faces perpendicular to surface plane of concrete. Construct transverse joints at right angles to centerline, unless otherwise indicated.

1. When joining existing pavement, place transverse joints to align with previously placed joints, unless otherwise indicated.

B. Construction Joints: Set construction joints at side and end terminations of pavement and at locations where pavement operations are stopped for more than one-half hour unless pavement terminates at isolation joints.

1. Doweled Joints: Install 1”x18” dowel bars and support assemblies at all construction joints. Dowels shall be spaced at 24” OC. Lubricate or asphalt-coat one-half of dowel length to prevent concrete bonding to one side of joint.

C. Isolation Joints: Form isolation joints of preformed ¾” joint-filler strips abutting concrete curbs, catch basins, manholes, inlets, structures, walks, other fixed objects, and where indicated.

1. Locate expansion joints at intervals of 50 feet, unless otherwise indicated.
2. Extend joint fillers full width and depth of joint.
3. Terminate joint filler not less than 1/2 inch (13 mm) or more than 1 inch (25 mm) below finished surface if joint sealant is indicated.
4. Place top of joint filler flush with finished concrete surface if joint sealant is not indicated.
5. Furnish joint fillers in one-piece lengths. Where more than one length is required, lace or clip joint-filler sections together.
6. Protect top edge of joint filler during concrete placement with metal, plastic, or other temporary preformed cap. Remove protective cap after concrete has been placed on both sides of joint.

D. Contraction Joints: Form weakened-plane contraction joints, sectioning concrete into areas as indicated or spaced no more than 10 feet from one another. Construct contraction joints for a depth equal to at

least one-fourth of the concrete thickness, as follows to match jointing of existing adjacent concrete pavement:

1. Doweled Contraction Joints: Install 1”x18” dowel bars and support assemblies at all bars and support assemblies at all contraction joints. Lubricate or asphalt coat one-half of dowel length to prevent concrete bonding to one side of joint.

E. Edging: Tool edges of pavement, gutters, curbs, and joints in concrete after initial floating with an edging tool to a 1/4-inch (6-mm) radius. Repeat tooling of edges after applying surface finishes. Eliminate tool marks on concrete surfaces.

3.6 CONCRETE PLACEMENT

A. Inspection: Before placing concrete, inspect and complete formwork installation, steel reinforcement, and items to be embedded or cast in. Notify other trades to permit installation of their work.

B. Remove snow, ice, or frost from subbase surface and reinforcement before placing concrete. Do not place concrete on frozen surfaces.

C. Moisten subbase to provide a uniform dampened condition at time concrete is placed. Do not place concrete around manholes or other structures until they are at required finish elevation and alignment.

D. Comply with ACI 301 requirements for measuring, mixing, transporting, and placing concrete.

E. Do not add water to concrete during delivery or at Project site.

F. Do not add water to fresh concrete after testing.

G. Deposit and spread concrete in a continuous operation between transverse joints. Do not push or drag concrete into place or use vibrators to move concrete into place.

H. Consolidate concrete according to ACI 301 by mechanical vibrating equipment supplemented by hand spading, rodding, or tamping.

1. Consolidate concrete along face of forms and adjacent to transverse joints with an internal vibrator. Keep vibrator away from joint assemblies, reinforcement, or side forms. Use only square-faced shovels for hand spreading and consolidation. Consolidate with care to prevent dislocating reinforcement, dowels, and joint devices.

I. Place concrete in two operations; strike off initial pour for entire width of placement and to the required depth below finish surface. Lay welded wire fabric or fabricated bar mats immediately in final position. Place top layer of concrete, strike off, and screed.

1. Remove and replace concrete that has been placed for more than 15 minutes without being covered by top layer, or use bonding agent if approved by Architect.

J. Screed pavement surfaces with a straightedge and strike off.

K. Commence initial floating using bull floats or darbies to impart an open textured and uniform surface plane before excess moisture or bleed water appears on the surface. Do not further disturb concrete surfaces before beginning finishing operations or spreading surface treatments.

L. Curbs and Gutters: When automatic machine placement is used for curb and gutter placement, submit revised mix design and laboratory test results that meet or exceed requirements. Produce curbs and gutters to required cross section, lines, grades, finish, and jointing as specified for formed concrete. If results are not approved, remove and replace with formed concrete.

M. Slip-Form Pavers: When automatic machine placement is used for pavement, submit revised mix design and laboratory test results that meet or exceed requirements. Produce pavement to required thickness, lines, grades, finish, and jointing as required for formed pavement.

1. Compact subbase and prepare subgrade of sufficient width to prevent displacement of paver machine during operations.

N. When adjoining pavement lanes are placed in separate pours, do not operate equipment on concrete until pavement has attained 85 percent of its 28-day compressive strength.

O. Cold-Weather Placement: Comply with ACI 306.1 and as follows. Protect concrete work from physical damage or reduced strength that could be caused by frost, freezing actions, or low temperatures.

1. When air temperature has fallen to or is expected to fall below 40 deg F (4.4 deg C), uniformly heat water and aggregates before mixing to obtain a concrete mixture temperature of not less than 50 deg F (10 deg C) and not more than 80 deg F (27 deg C) at point of placement.
2. Do not use frozen materials or materials containing ice or snow.
3. Do not use calcium chloride, salt, or other materials containing antifreeze agents or chemical accelerators unless otherwise specified and approved in mix designs.

P. Hot-Weather Placement: Comply with ACI 301 and as follows when hot-weather conditions exist:

1. Cool ingredients before mixing to maintain concrete temperature below 90 deg F (32 deg C) at time of placement. Chilled mixing water or chopped ice may be used to control temperature, provided water equivalent of ice is calculated to total amount of mixing water. Using liquid nitrogen to cool concrete is Contractor's option.
2. Cover steel reinforcement with water-soaked burlap so steel temperature will not exceed ambient air temperature immediately before embedding in concrete.
3. Fog-spray forms, steel reinforcement, and subgrade just before placing concrete. Keep subgrade moisture uniform without standing water, soft spots, or dry areas.

3.7 FLOAT FINISHING

A. General: Do not add water to concrete surfaces during finishing operations.

B. Float Finish: Begin the second floating operation when bleed-water sheen has disappeared and concrete surface has stiffened sufficiently to permit operations. Float surface with power-driven floats, or by hand floating if area is small or inaccessible to power units. Finish surfaces to true planes. Cut down high spots and fill low spots. Refloat surface immediately to uniform granular texture.

1. Medium-to-Fine-Textured Broom Finish: Draw a soft bristle broom across float-finished concrete surface perpendicular to line of traffic to provide a uniform, fine-line texture.

3.8 SPECIAL FINISHES

1. Section not used

3.9 CONCRETE PROTECTION AND CURING

A. General: Protect freshly placed concrete from premature drying and excessive cold or hot temperatures.

B. Comply with ACI 306.1 for cold-weather protection.

C. Evaporation Retarder: Apply evaporation retarder to concrete surfaces if hot, dry, or windy conditions cause moisture loss approaching 0.2 lb/sq. ft. x h (1 kg/sq. m x h) before and during finishing operations. Apply according to manufacturer's written instructions after placing, screeding, and bull floating or darbying concrete, but before float finishing.

D. Begin curing after finishing concrete but not before free water has disappeared from concrete surface.

E. Curing Methods: Cure concrete by moisture curing, moisture-retaining-cover curing, curing compound, or a combination of these as follows:

1. Moist Curing: Keep surfaces continuously moist for not less than seven days with the following materials:

   a. Water.
   b. Continuous water-fog spray.
   c. Absorptive cover, water saturated and kept continuously wet. Cover concrete surfaces and edges with 12-inch (300-mm) lap over adjacent absorptive covers.

2. Moisture-Retaining-Cover Curing: Cover concrete surfaces with moisture-retaining cover for curing concrete, placed in widest practicable width, with sides and ends lapped at least 12 inches (300 mm), and sealed by waterproof tape or adhesive. Immediately repair any holes or tears during curing period using cover material and waterproof tape.
3. Curing Compound: Apply uniformly in continuous operation by power spray or roller according to manufacturer's written instructions. Recoat areas subjected to heavy rainfall within three hours after initial application. Maintain continuity of coating and repair damage during curing period.

3.10 PAVEMENT TOLERANCES

A. Comply with tolerances of ACI 117 and as follows:

1. Elevation: 1/4 inch (6 mm).
2. Thickness: Plus 3/8 inch (10 mm), minus 1/4 inch (6 mm).
3. Surface: Gap below 10-foot- (3-m-) long, unleveled straightedge not to exceed 1/4 inch (6 mm).

4. Lateral Alignment and Spacing of Tie Bars and Dowels: 1 inch (25 mm).
5. Vertical Alignment of Tie Bars and Dowels: 1/4 inch (6 mm).
6. Alignment of Tie-Bar End Relative to Line Perpendicular to Pavement Edge: 1/2 inch (13 mm).
7. Alignment of Dowel-Bar End Relative to Line Perpendicular to Pavement Edge: Length of dowel 1/4 inch per 12 inches (6 mm per 300 mm).
8. Joint Spacing: 3 inches (75 mm).
9. Contraction Joint Depth: Plus 1/4 inch (6 mm), no minus.
10. Joint Width: Plus 1/8 inch (3 mm), no minus.

3.11 PAVEMENT MARKING

A. Do not apply pavement-marking paint until layout, colors, and placement have been verified with Architect.

B. Allow concrete pavement to cure for 28 days and be dry before starting pavement marking.

C. Sweep and clean surface to eliminate loose material and dust.

D. Apply paint with mechanical equipment to produce pavement markings of dimensions indicated with uniform, straight edges. Apply at manufacturer's recommended rates to provide a minimum wet film thickness of 15 mils (0.4 mm).

1. Spread glass beads uniformly into wet pavement markings at a rate of 6 lb/gal. (0.72 kg/L).

3.12 WHEEL STOPS

A. Securely attach wheel stops into pavement with not less than two galvanized steel dowels embedded in holes drilled or cast into wheel stops at one-quarter to one-third points. Firmly bond each dowel to wheel stop and to pavement. Securely install dowels into pavement and bond to wheel stop. Recess head of dowel beneath top of wheel stop.

3.13 FIELD QUALITY CONTROL

A. Testing Agency: Owner will engage a qualified independent testing and inspecting agency to perform field tests and inspections and prepare test reports.

B. Testing Services: Testing of composite samples of fresh concrete obtained according to ASTM C 172 shall be performed according to the following requirements:

1. Testing Frequency: Obtain at least 1 composite sample for each 5000 sq. ft. (465 sq. m) or fraction thereof of each concrete mix placed each day.

   a. When frequency of testing will provide fewer than five compressive-strength tests for each concrete mixture, testing shall be conducted from at least five randomly selected batches or from each batch if fewer than five are used.

2. Slump: ASTM C 143/C 143M; one test at point of placement for each composite sample, but not less than one test for each day's pour of each concrete mix. Perform additional tests when concrete consistency appears to change.
3. Air Content: ASTM C 231, pressure method; one test for each composite sample, but not less than one test for each day's pour of each concrete mix.
4. Concrete Temperature: ASTM C 1064; one test hourly when air temperature is 40 deg F (4.4 deg C) and below and when 80 deg F (27 deg C) and above, and one test for each composite sample.
5. Compression Test Specimens: ASTM C 31/C 31M; cast and laboratory cure one set of three standard cylinder specimens for each composite sample.
6. Compressive-Strength Tests: ASTM C 39/C 39M; test 1 specimen at 7 days and 2 specimens at 28 days.

    a. A compressive-strength test shall be the average compressive strength from 2 specimens obtained from same composite sample and tested at 28 days.

C. Strength of each concrete mix will be satisfactory if average of any 3 consecutive compressive-strength tests equals or exceeds specified compressive strength and no compressive-strength test value falls below specified compressive strength by more than 500 psi (3.4 MPa).

D. Test results shall be reported in writing to Architect, concrete manufacturer, and Contractor within 48 hours of testing. Reports of compressive-strength tests shall contain Project identification name and number, date of concrete placement, name of concrete testing and inspecting agency, location of concrete batch in Work, design compressive strength at 28 days, concrete mixture proportions and materials, compressive breaking strength, and type of break for both 7- and 28-day tests.

E. Nondestructive Testing: Impact hammer, sonoscope, or other nondestructive device may be permitted by Architect but will not be used as sole basis for approval or rejection of concrete.

F. Additional Tests: Testing and inspecting agency shall make additional tests of concrete when test results indicate that slump, air entrainment, compressive strengths, or other requirements have not been met, as directed by Architect.

G. Remove and replace concrete pavement where test results indicate that it does not comply with specified requirements.

H. Additional testing and inspecting, at Contractor's expense, will be performed to determine compliance of replaced or additional work with specified requirements.

3.14 REPAIRS AND PROTECTION

A. Remove and replace concrete pavement that is broken, damaged, or defective or that does not comply with requirements in this Section.

B. Drill test cores, where directed by Architect, when necessary to determine magnitude of cracks or defective areas. Fill drilled core holes in satisfactory pavement areas with portland cement concrete bonded to pavement with epoxy adhesive.

C. Protect concrete from damage. Exclude traffic from pavement for at least 14 days after placement. When construction traffic is permitted, maintain pavement as clean as possible by removing surface stains and spillage of materials as they occur.

D. Maintain concrete pavement free of stains, discoloration, dirt, and other foreign material. Sweep concrete pavement not more than two days before date scheduled for Substantial Completion inspections.

END OF SECTION 321313

SECTION 321373 - CONCRETE PAVING JOINT SEALANTS

PART 1 - GENERAL

1.1 RELATED DOCUMENTS

A. Drawings and general provisions of the Contract, including General and Supplementary Conditions and Division 01 Specification Sections, apply to this Section.

1.2 SUMMARY

A. This Section includes the following:

1. Expansion and contraction joints within cement concrete pavement.
2. Joints between cement concrete and asphalt pavement.

B. Related Sections include the following:
1. Division 32 Section "Asphalt Paving" for constructing joints between concrete and asphalt pavement.
2. Division 32 Section "Concrete Paving" for constructing joints in concrete pavement.

1.3 SUBMITTALS

A. Product Data: For each joint-sealant product indicated.

B. Product Certificates: For each type of joint sealant and accessory, signed by product manufacturer.

C. Compatibility and Adhesion Test Reports: From sealant manufacturer, indicating the following:

1. Materials forming joint substrates and joint-sealant backings have been tested for compatibility and adhesion with joint sealants.
2. Interpretation of test results and written recommendations for primers and substrate preparation needed for adhesion.

D. Product Test Reports: Based on evaluation of comprehensive tests performed by a qualified testing agency, for sealants.

1.4 QUALITY ASSURANCE

A. Installer Qualifications: An employer of workers trained and approved by manufacturer.

B. Source Limitations: Obtain each type of joint sealant through one source from a single manufacturer.

C. Product Testing: Obtain test results for "Product Test Reports" Paragraph in "Submittals" Article from a qualified testing agency based on testing of current sealant products within a 36-month period preceding the commencement of the Work.

1. Testing Agency Qualifications: An independent testing agency qualified according to ASTM C 1021 for testing indicated, as documented according to ASTM E 548.

1.5 DELIVERY, STORAGE, AND HANDLING

A. Deliver materials to Project site in original unopened containers or bundles with labels indicating manufacturer, product name and designation, color, expiration date, pot life, curing time, and mixing instructions for multicomponent materials.

B. Store and handle materials to comply with manufacturer's written instructions to prevent their deterioration or damage due to moisture, high or low temperatures, contaminants, or other causes.

1.6 PROJECT CONDITIONS

A. Do not proceed with installation of joint sealants under the following conditions:

1. When ambient and substrate temperature conditions are outside limits permitted by joint-sealant manufacturer.
2. When ambient and substrate temperature conditions are outside limits permitted by joint-sealant manufacturer or are below 40 deg F (4.4 deg C).
3. When joint substrates are wet or covered with frost.
4. Where joint widths are less than those allowed by joint-sealant manufacturer for applications indicated.
5. Where contaminants capable of interfering with adhesion have not yet been removed from joint substrates.

PART 2 - PRODUCTS

2.1 MANUFACTURERS

A. Available Products: Subject to compliance with requirements, products that may be incorporated into the Work include, but are not limited to, products listed in other Part 2 articles.

B. Products: Subject to compliance with requirements, provide one of the products listed in other Part 2 articles.

2.2 MATERIALS, GENERAL

A. Compatibility: Provide joint sealants, backing materials, and other related materials that are compatible with one another and with joint substrates under conditions of service and application, as demonstrated by joint-sealant manufacturer based on testing and field experience.

B. Colors of Exposed Joint Sealants: As selected by Landscape Architect from manufacturer's full range.

2.3 COLD-APPLIED JOINT SEALANTS

A. Type NS Silicone Sealant for Concrete: Single-component, low-modulus, neutral-curing, nonsag silicone sealant complying with ASTM D 5893 for Type NS.

1. Products:

a. Crafco Inc.; RoadSaver Silicone.
b. Dow Corning Corporation; 888.

2.4 HOT-APPLIED JOINT SEALANTS

a. Section not used

2.5 JOINT-SEALANT BACKER MATERIALS

A. General: Provide joint-sealant backer materials that are nonstaining; are compatible with joint substrates, sealants, primers, and other joint fillers; and are approved for applications indicated by joint-sealant manufacturer based on field experience and laboratory testing.

B. Round Backer Rods for Cold- and Hot-Applied Sealants: ASTM D 5249, Type 1, of diameter and density required to control sealant depth and prevent bottom-side adhesion of sealant.

C. Backer Strips for Cold- and Hot-Applied Sealants: ASTM D 5249; Type 2; of thickness and width required to control sealant depth, prevent bottom-side adhesion of sealant, and fill remainder of joint opening under sealant.

D. Round Backer Rods for Cold-Applied Sealants: ASTM D 5249, Type 3, of diameter and density required to control sealant depth and prevent bottom-side adhesion of sealant.

2.6 PRIMERS

A. Primers: Product recommended by joint-sealant manufacturer where required for adhesion of sealant to joint substrates indicated, as determined from preconstruction joint-sealant-substrate tests and field tests.

PART 3 - EXECUTION

3.1 EXAMINATION

A. Examine joints indicated to receive joint sealants, with Installer present, for compliance with requirements for joint configuration, installation tolerances, and other conditions affecting joint-sealant performance.

1. Proceed with installation only after unsatisfactory conditions have been corrected.

3.2 PREPARATION

A. Surface Cleaning of Joints: Clean out joints immediately before installing joint sealants to comply with joint-sealant manufacturer's written instructions.

B. Joint Priming: Prime joint substrates where indicated or where recommended in writing by joint-sealant manufacturer, based on preconstruction joint-sealant-substrate tests or prior experience. Apply primer to comply with joint-sealant manufacturer's written instructions. Confine primers to areas of joint-sealant bond; do not allow spillage or migration onto adjoining surfaces.

3.3 INSTALLATION OF JOINT SEALANTS

A. General: Comply with joint-sealant manufacturer's written installation instructions for products and applications indicated, unless more stringent requirements apply.

B. Sealant Installation Standard: Comply with recommendations in ASTM C 1193 for use of joint sealants as applicable to materials, applications, and conditions indicated.

C. Install backer materials of type indicated to support sealants during application and at position required to produce cross-sectional shapes and depths of installed sealants relative to joint widths that allow optimum sealant movement capability.

1. Do not leave gaps between ends of backer materials.
2. Do not stretch, twist, puncture, or tear backer materials.
3. Remove absorbent backer materials that have become wet before sealant application and replace them with dry materials.

D. Install sealants using proven techniques that comply with the following and at the same time backings are installed:

1. Place sealants so they directly contact and fully wet joint substrates.
2. Completely fill recesses provided for each joint configuration.
3. Produce uniform, cross-sectional shapes and depths relative to joint widths that allow optimum sealant movement capability.

E. Tooling of Nonsag Sealants: Immediately after sealant application and before skinning or curing begins, tool sealants according to requirements specified below to form smooth, uniform beads of configuration indicated; to eliminate air pockets; and to ensure contact and adhesion of sealant with sides of joint.

1. Remove excess sealants from surfaces adjacent to joint.
2. Use tooling agents that are approved in writing by joint-sealant manufacturer and that do not discolor sealants or adjacent surfaces.

F. Provide joint configuration to comply with joint-sealant manufacturer's written instructions, unless otherwise indicated.

G. Provide recessed joint configuration for silicone sealants of recess depth and at locations indicated.

3.4 CLEANING

A. Clean off excess sealants or sealant smears adjacent to joints as the Work progresses by methods and with cleaning materials approved by manufacturers of joint sealants and of products in which joints occur.

3.5 PROTECTION

A. Protect joint sealants during and after curing period from contact with contaminating substances and from damage resulting from construction operations or other causes so sealants are without deterioration or damage at time of Substantial Completion. If, despite such protection, damage or deterioration occurs, cut out and remove damaged or deteriorated joint sealants immediately and replace with joint sealant so installations with repaired areas are indistinguishable from the original work.

END OF SECTION 321373

SECTION 32 3113 - CHAIN LINK FENCES AND GATES

PART 1 GENERAL

1.1 SECTION INCLUDES

A. Posts, rails, and frames.
B. Wire fabric.
C. Accessories.

1.2 REFERENCE STANDARDS

A. ASTM A1011/A1011M - Standard Specification for Steel, Sheet and Strip, Hot-Rolled, Carbon, Structural, High-Strength Low-Alloy, High-Strength Low-Alloy with Improved Formability, and Ultra-High Strength.
B. ASTM F567 - Standard Practice for Installation of Chain-Link Fence.
C. ASTM F1043 - Standard Specification for Strength and Protective Coatings on Steel Industrial Fence Framework.
D. ASTM F1083 - Standard Specification for Pipe, Steel, Hot-Dipped Zinc-Coated (Galvanized) Welded, for Fence Structures.
E. CLFMI CLF-FIG0111 - Field Inspection Guide.
F. CLFMI CLF-SFR0111 - Security Fencing Recommendations.
G. FS RR-F-191/1D - Fencing, Wire and Post Metal (Chain-Link Fence Fabric).

1.3 SUBMITTALS

A. See Section 01 3000 - Administrative Requirements, for submittal procedures.
B. Product Data: Provide data on fabric, posts, accessories, fittings and hardware.
C. Shop Drawings: Indicate plan layout, spacing of components, post foundation dimensions, hardware anchorage, and schedule of components. See CLFMI CLF-SFR0111 for planning and design recommendations.
D. Manufacturer's Qualification Statement.
E. Fence Installer Qualification Statement.

1.4 QUALITY ASSURANCE

A. Manufacturer Qualifications: Company specializing in manufacturing products specified in this section, with not less than three years of documented experience.
B. Fence Installer: Company with demonstrated successful experience installing similar projects and products, with not less than five years of documented experience.

1.5 WARRANTY

A. See Section 01 7800 - Closeout Submittals, for additional warranty requirements.
B. Correct defective Work within a five year period after Date of Substantial Completion.

PART 2 PRODUCTS

2.1 COMPONENTS

A. Line Posts: 1.9 inch diameter.
B. Corner and Terminal Posts: 2.38 inch diameter.
C. Gate Posts: 3-1/2 inch diameter.
D. Top and Brace Rail: 1.66 inch diameter, plain end, sleeve coupled.
E. Bottom Rail: 1.66 inch diameter, plain end, sleeve coupled.
F. Gate Frame: 1.66 inch diameter for welded fabrication.
G. Fabric: 2 inch diamond mesh interwoven wire, 6 gauge, 0.1920 inch thick, top selvage knuckle end closed, bottom selvage twisted tight.
H. Tension Wire: 6 gauge, 0.1920 inch thick steel, single strand.
I. Tie Wire: Aluminum alloy steel wire.

2.2 MATERIALS

A. Posts, Rails, and Frames:
   1. ASTM A1011/A1011M, Designation SS; hot-rolled steel strip, cold formed to pipe configuration, longitudinally welded construction, minimum yield strength of 50 ksi; zinc coating complying with ASTM F1043 and ASTM F1083.
   2. Line Posts: Type I round in accordance with FS RR-F-191/1D.
   3. Terminal, Corner, Rail, Brace, and Gate Posts: Type I round in accordance with FS RR-F-191/1D.

B. Wire Fabric:

2.3 ACCESSORIES

A. Caps: Cast steel galvanized; sized to post diameter, set screw retainer.
B. Fittings: Sleeves, bands, clips, rail ends, tension bars, fasteners and fittings; steel.
C. Privacy Slats: Aluminum strips, sized to fit fabric weave.

PART 3 EXECUTION

3.1 INSTALLATION

A. Install framework, fabric, accessories and gates in accordance with ASTM F567.
B. Set intermediate posts plumb , in concrete footings with top of footing 2 inches above finish grade. Slope top of concrete for water runoff.
C. Line Post Footing Depth Below Finish Grade: ASTM F567.
D. Corner, Gate and Terminal Post Footing Depth Below Finish Grade: ASTM F567.
E. Brace each gate and corner post to adjacent line post with horizontal center brace rail. Install brace rail one bay from end and gate posts.
F. Install support arms sloped inward and attach barbed wire; tension and secure.

3.2 TOLERANCES

A. Maximum Variation From Plumb: 1/4 inch.
B. Maximum Offset From True Position: 1 inch.
C. Do not infringe on adjacent property lines.

3.3 FIELD QUALITY CONTROL

A. See Section 01 4000 - Quality Requirements, for additional requirements.
B. Layout: Verify that fence installation markings are accurate to design, paying attention to gate locations, underground utilities, and property lines.
C. Fence Height: Randomly measure fence height at three locations or at areas that appear out of compliance with design.
D. Workmanship: Verify neat installation free of defects. See CLFMI CLF-FIG0111 for field inspection guidance.

3.4 CLEANING

A. Clean jobsite of excess materials; scatter excess material from post hole excavations uniformly away from posts. Remove excess material if required.
B. Clean fence with mild household detergent and clean water rinse well.

END OF SECTION

SECTION 32 3119 - DECORATIVE METAL FENCES AND GATES

PART 1 GENERAL

1.1 SECTION INCLUDES

A. Decorative steel fences.
B. Automatic gate operators.

1.2 REFERENCE STANDARDS

A. ASTM A653/A653M - Standard Specification for Steel Sheet, Zinc-Coated (Galvanized) or Zinc-Iron Alloy-Coated (Galvannealed) by the Hot-Dip Process.
B. ASTM B221 - Standard Specification for Aluminum and Aluminum-Alloy Extruded Bars, Rods, Wire, Profiles, and Tubes.
C. ASTM D523 - Standard Test Method for Specular Gloss.
D. ASTM D822/D822M - Standard Practice for Filtered Open-Flame Carbon-Arc Exposures of Paint and Related Coatings.
E. ASTM D2244 - Standard Practice for Calculation of Color Tolerances and Color Differences from Instrumentally Measured Color Coordinates.
F. ASTM D2794 - Standard Test Method for Resistance of Organic Coatings to the Effects of Rapid Deformation (Impact).
G. ASTM D3359 - Standard Test Methods for Rating Adhesion by Tape Test.
H. ASTM F2200 - Standard Specification for Automated Vehicular Gate Construction.
I. ASTM F2408 - Standard Specification for Ornamental Fences Employing Galvanized Steel Tubular Pickets.
J. NEMA 250 - Enclosures for Electrical Equipment (1000 Volts Maximum).
K. NFPA 70 - National Electrical Code.
L. UL 50 - Enclosures for Electrical Equipment, Non-Environmental Considerations.
M. UL 50E - Enclosures for Electrical Equipment, Environmental Considerations.
N. UL 325 - Standard for Door, Drapery, Gate, Louver, and Window Operators and Systems.

1.3 SUBMITTALS

A. See Section 01 3000 - Administrative Requirements, for submittal procedures.
B. Product Data: Submit manufacturer's data sheets on each product to be used, including:
   1. Preparation instructions and recommendations.
   2. Storage and handling requirements and recommendations.
   3. Installation methods.
C. Shop Drawings:
   1. Indicate plan layout, spacing of components, post foundation dimensions, hardware anchorage, gates, and schedule of components.
D. Manufacturer's Warranty.

1.4 QUALITY ASSURANCE

A. Manufacturer Qualifications: Company specializing in manufacturing products specified in this section with minimum five years documented experience.
B. Installer Qualifications: Experienced with type of construction involved and materials and techniques specified and approved by fence manufacturer.

1.5 DELIVERY, STORAGE AND HANDLING

A. Store materials in a manner to ensure proper ventilation and drainage. Protect against damage, weather, vandalism and theft.

1.6 WARRANTY

A. See Section 01 7800 - Closeout Submittals, for additional warranty requirements.

B. All structural fence components (i.e. rails, pickets, and posts) shall be warranted within specified limitations, by the manufacturer for a period of 20 years from date of original purchase. Warranty shall cover any defects in material finish, including cracking, peeling, chipping, blistering or corroding.

PART 2 PRODUCTS

2.1 MANUFACTURERS

A. Decorative Metal Fences and Gates:
   1. Ameristar Perimeter Security, USA; Montage II: www.ameristarperimeter.com/#sle.
   2. Substitutions: See Section 01 6000 - Product Requirements.

2.2 FENCES

A. Fences: Complete factory-fabricated system of posts and panels, accessories, fittings, and fasteners; finished with electrodeposition coating, and having the following performance characteristics:
   1. Capable of resisting vertical load, horizontal load and infill performance requirements for fence categories defined in ASTM F2408.

B. Electro-Deposition Coating: Multistage pretreatment/wash with zinc phosphate, followed by epoxy primer and acrylic topcoat.
   1. Total Coating Thickness: 2 mils, minimum.
   2. Color: As selected by Architect from manufacturer's standard range.
   3. Coating Performance: Comply with general requirements of ASTM F2408.
      a. Adhesion: ASTM D3359 (Method B); Class 3B with 90 percent or more of coating remaining in tested area.
      b. Impact Resistance: ASTM D2794; 60 inch pounds.
      c. Weathering Resistance: ASTM D523, ASTM D822/D822M and ASTM D2244; less than 60 percent loss of gloss.

C. Steel: ASTM A653/A653M; tensile strength 45,000 psi, minimum.
   1. Hot-dip galvanized; ASTM A653/A653M, G60.
   2. 62 percent recycled steel, minimum.

D. Aluminum: ASTM B221.
   1. Tubular Pickets, Rails and Posts: 6005-T5 alloy.
   2. Extrusions for Posts and Rails (Outer Channel): 6005-T5 alloy.
   3. Extrusions for Pickets and Rail (Inner Slide Channels): 6063-T5 alloy.

2.3 SPECIALITY HARDWARE

A. Hinges: Finished to match fence components.
   1. Closing: Self.
   2. Mechanism: Spring.
   3. Material: Steel.

B. Latches: Finished to match fence components.
   1. Mechanism: Spring-loaded.
   2. Locking: Magnetic.
   3. Material: Steel.

C. Rollers: Finished to match fence components.
   1. Load Rating: 500 pounds (227 kg).
   2. Groove: Flat.
   3. Material: Steel.

2.4 AUTOMATIC GATE OPERATORS

A. Swinging Gates: Pre-wired, pedestal mounted gate operator for horizontal swinging gates, per ASTM F2200 and UL 325.
   1. Class: Class I.
   2. Operating type: Swing arm.
   3. Control Functions: Open, pause, and close.
   4. Maximum Open/Close Time: 10 seconds.
   5. Access: Card and License Plate Reader.
   6. Maximum gate weight: 500 pounds (187 kilograms).
   7. Horsepower Rating: Suitable for connected load.
   8. Entrapment Protection Devices: Provide sensing devices and safety mechanisms complying with UL 325.
      a. Primary Device: Provide electric sensing edge, wireless sensing, or NEMA 4X photo eye sensors as required with momentary-contact control device.
      b. Secondary Device: Provide electric sensing edge with wireless edge kit or non-monitored safety edge as an option along with continuous-constant control device.
   9. Enclosures: Comply with NEMA 250, and list and label as complying with UL 50 and UL 50E.
      a. Environment Type per NEMA 250: Unless otherwise indicated, as specified for the following installation locations:
         1) Outdoor Locations: Type 3R.
         2) Outdoor Locations, direct splashing: Type 4.

B. Sliding Gates: Prewired, pedestal-mounted gate operator for horizontal sliding gates, per ASTM F2200 and UL 325.
   1. Class: Class I.
   2. Operating type: Drive belt.
   3. Control Functions: Open, Pause, Close.
   4. Maximum Open/Close Time: 10 seconds.
   5. Access: Card and License Plate Reader.
   6. Maximum gate weight: 500 pounds (187 kilograms).
   7. Horsepower Rating: Suitable for connected load.
   8. Entrapment Protection Devices: Provide sensing devices and safety mechanisms complying with UL 325.
      a. Primary Device: Provide electric sensing edge, wireless sensing, or NEMA 4X photo eye sensors as required with momentary-contact control device.
      b. Secondary Device: Provide electric sensing edge with wireless edge kit or non-monitored safety edge as an option along with continuous-constant control device.
   9. Enclosures: Comply with NEMA 250, and list and label as complying with UL 50 and UL 50E.
      a. Environment Type per NEMA 250: Unless otherwise indicated, as specified for the following installation locations:
         1) Outdoor Locations: Type 3R.
         2) Outdoor Locations, direct splashing: Type 4.

C. Swining and sliding gates shall have loop detector on secure side of gate.

2.5 ACCESSORIES

A. Keypad Mounting Supports: Where not factory installed, provide mounting supports for keypad installation.
B. Caps: Cast steel galvanized; sized to post diameter, set screw retainer.
C. Fittings: Sleeves, bands, clips, rail ends, tension bars, fasteners and fittings; steel.

D. Extension Arms: Cast steel galvanized, to accommodate three strands of barbed wire, single arm, vertical.

PART 3 EXECUTION

3.1 EXAMINATION

A. Do not begin installation until substrates have been properly prepared.
B. If substrate preparation is the responsibility of another installer, notify Architect of unsatisfactory preparation before proceeding.

3.2 PREPARATION

A. Clean surfaces thoroughly prior to installation.

3.3 INSTALLATION

A. Install in accordance with manufacturer's instructions.
B. Set fence posts in accordance with the manufacturer recommended spacing.
C. Space gate posts according to the manufacturers' drawings, dependent on standard out-to-out gate leaf dimensions and gate hardware selected.
    1. Base type and quantity of gate hinges on the application, weight, height, and number of gate cycles.
    2. Identify the necessary hardware required for the application on the manufacturer's gate drawings.
D. Install operator in accordance with manufacturer's instructions and in accordance with NFPA 70.

3.4 TOLERANCES

A. Maximum Variation From Plumb: 1/4 inch.
B. Maximum Offset From Indicated Position: 1 inch.
C. Minimum Distance from Property Line: 6 inches.

3.5 CLEANING

A. Clean jobsite of excess materials; scatter excess material from post hole excavations uniformly away from posts. Remove excess material if required.
B. Clean fence with mild household detergent and clean water rinse well.

3.6 CLOSEOUT ACTIVITIES

A. Demonstration: Demonstrate operation of system to Owner's personnel.
    1. Use operation and maintenance data as reference during demonstration.
    2. Briefly describe function, operation, and maintenance of each component.
B. Training: Train Owner's personnel on operation and maintenance of system.
    1. Use operation and maintenance manual as training reference, supplemented with additional training materials as required.
    2. Provide minimum of two hours of training.
    3. Instructor: Manufacturer's training personnel.
    4. Location: At project site.

3.7 PROTECTION

A. Protect installed products until completion of project.
B. Touch-up, repair, or replace damaged products before Date of Substantial Completion.

END OF SECTION

SECTION 32 3913 - METAL BOLLARDS

PART 1 GENERAL

2.1 SECTION INCLUDES

A. HDPE Bollard Covers.

2.2 SUBMITTALS

A. See Section 01 3000 - Administrative Requirements for submittal procedures.
B. Product Data: Provide product data for each product including electrical information.
C. Shop Drawings: Indicate height, diameter, electrical conduit location, and anchor bolt information.
D. Specimen warranty.

PART 2 PRODUCTS

3.1 BASIS OF DESIGN

A. Lit Bollards:
   1. Substitutions: See Section 01 6000 - Product Requirements.
B. HDP
   1. Diameter, Height, Color, and Style to match Lit Bollard as closely as possible.

3.2 MATERIALS

A. Extruded Aluminum: ASTM B211/B211M, 6063 alloy, T6 temper.
B. Aluminum Alloy Seamless Tubes: ASTM B210/B210M, 6061 alloy, T6 temper.
C. Bolts, Nuts, and Washers: Stainless Steel.
D. Plastic Bollard Cover: Formolene HB 5502B, High Density Polyethylene (HDPE).
E. Illumination System:
   1. Provide products that are listed and labeled as complying with UL 879, where applicable.
   2. Power: 120 V, 60 Hz.

3.3 ACCESSORIES

A. Self-adhesive foam strips.
B. Self-adhesive neoprene tape.

PART 3 EXECUTION

4.1 EXAMINATION

A. Examine paving or other substrates for compliance with manufacturer's requirements for placement and location of embedded items, condition of substrate, and other conditions affecting installation of bollards.
B. Proceed with installation only after unsatisfactory conditions have been corrected.

4.2 INSTALLATION

A. Install in accordance with manufacturer's written instructions.
B. Coordinate bollard work with work of other trades for proper time and sequence to avoid construction delays.
C. Accurately fit, align, security fasten, and install free from distortion or defects.

END OF SECTION

SECTION 329200 – TURF AND GRASSES

PART 1 – GENERAL

1.1 RELATED DOCUMENTS

A. Drawings and general provisions of the Contract, including General and Supplementary Conditions and Division 01 Specification Sections, apply to this Section.

1.2 SUMMARY

A. Section Includes:
   1. Sodding.
   2. Hydroseeding.
   3. Turf renovation.
   4. Erosion-control materials.

B. Related Sections:
   1. Division 31 Section "Site Clearing" for topsoil stripping and stockpiling.
   2. Division 31 Section "Earth Moving" for excavation, filling and backfilling, and rough grading.
   3. Division 32 Section "Plants" for border edgings.
   4. Division 33 Section "Subdrainage" for subsurface drainage.

1.3 DEFINITIONS

A. Duff Layer: The surface layer of native topsoil that is composed of mostly decayed leaves, twigs, and detritus.

B. Finish Grade: Elevation of finished surface of planting soil.

C. Manufactured Topsoil: Soil produced off-site by homogeneously blending mineral soils or sand with stabilized organic soil amendments to produce topsoil or planting soil.

D. Pesticide: A substance or mixture intended for preventing, destroying, repelling, or mitigating a pest. This includes insecticides, miticides, herbicides, fungicides, rodenticides, and molluscicides. It also includes substances or mixtures intended for use as a plant regulator, defoliant, or desiccant.

E. Pests: Living organisms that occur where they are not desired or that cause damage to

plants, animals, or people. These include insects, mites, grubs, mollusks (snails and slugs), rodents (gophers, moles, and mice), unwanted plants (weeds), fungi, bacteria, and viruses.

F. Planting Soil: Standardized topsoil; existing, native surface topsoil; existing, in-place surface soil; imported topsoil; or manufactured topsoil that is modified with soil amendments and perhaps fertilizers to produce a soil mixture best for plant growth.

G. Subgrade: Surface or elevation of subsoil remaining after excavation is complete, or top surface of a fill or backfill before planting soil is placed.

H. Subsoil: All soil beneath the topsoil layer of the soil profile, and typified by the lack of organic matter and soil organisms.

I. Surface Soil: Soil that is present at the top layer of the existing soil profile at the Project site. In undisturbed areas, the surface soil is typically topsoil, but in disturbed areas such as urban environments, the surface soil can be subsoil.

1.4 SUBMITTALS

A. Product Data: For each type of product indicated.
   1. Pesticides and Herbicides: Include product label and manufacturer's application instructions specific to this Project.
   2. Certification of Grass Seed: From seed vendor for each grass-seed monostand or mixture stating the botanical and common name, percentage by weight of each species and variety, and percentage of purity, germination, and weed seed. Include the year of production and date of packaging.
   3. Certification of each seed mixture for turfgrass sod. Include identification of source and name and telephone number of supplier.

B. Qualification Data: For qualified landscape Installer.

C. Product Certificates: For soil amendments and fertilizers, from manufacturer.

D. Material Test Reports: For existing native surface topsoil and imported or manufactured topsoil.

E. Maintenance Instructions: Recommended procedures to be established by Owner for maintenance of turf during a calendar year. Submit before expiration of required initial maintenance periods.

1.5 QUALITY ASSURANCE

A. Installer Qualifications: A qualified landscape Installer whose work has resulted in successful turf establishment.
   1. Professional Membership: Installer shall be a member in good standing of either the Professional Landcare Network or the American Nursery and Landscape Association.
   2. Experience: Five years' experience in turf installation in addition to requirements in Division 01 Section "Quality Requirements."
   3. Installer's Field Supervision: Require Installer to maintain an experienced full-time supervisor on Project site when work is in progress.
   4. Personnel Certifications: Installer's field supervisor shall have certification in one of the following categories from the Professional Landcare Network:
      a. Certified Landscape Technician - Exterior, with installation and maintenance specialty area(s), designated CLT-Exterior.
      b. Certified Turfgrass Professional, designated CTP.
      c. Certified Turfgrass Professional of Cool Season Lawns, designated CTP-CSL.
   5. Maintenance Proximity: Not more than one hours normal travel time from Installer's place of business to Project site.
   6. Pesticide Applicator: State licensed, commercial.

B. Soil-Testing Laboratory Qualifications: An independent laboratory or university laboratory, recognized by the State Department of Agriculture, with the experience and capability to conduct the testing indicated and that specializes in types of tests to be performed.

C. Soil Analysis: For each unamended soil type, furnish soil analysis and a written report by a qualified soil-testing laboratory stating percentages of organic matter; gradation of sand, silt, and clay content; cation exchange capacity; sodium absorption ratio; deleterious material; pH; and mineral and plant-nutrient content of the soil.
   1. Testing methods and written recommendations shall comply with USDA's Handbook No. 60.
   2. The soil-testing laboratory shall oversee soil sampling, with depth, location, and number of samples to be taken per instructions from Architect. A minimum of three representative samples shall be taken from varied locations for each soil to be used or amended for planting purposes.
   3. Report suitability of tested soil for turf growth.
      a. Based on the test results, state recommendations for soil treatments and soil amendments to be incorporated. State recommendations in weight per 1000 sq. ft. or volume per cu. yd. for nitrogen, phosphorus, and potash nutrients and soil amendments to be added to produce satisfactory planting soil suitable for healthy, viable plants.

b. Report presence of problem salts, minerals, or heavy metals, including aluminum, arsenic, barium, cadmium, chromium, cobalt, lead, lithium, and vanadium. If such problem materials are present, provide additional recommendations for corrective action.

D. Preinstallation Conference: Conduct conference at Project site.

1.6 DELIVERY, STORAGE, AND HANDLING

A. Seed and Other Packaged Materials: Deliver packaged materials in original, unopened containers showing weight, certified analysis, name and address of manufacturer, and indication of conformance with state and federal laws, as applicable.

B. Sod: Harvest, deliver, store, and handle sod according to requirements in "Specifications for Turfgrass Sod Materials" and "Specifications for Turfgrass Sod Transplanting and Installation" in TPI's "Guideline Specifications to Turfgrass Sodding." Deliver sod in time for planting within 24 hours of harvesting. Protect sod from breakage and drying.

C. Bulk Materials:
   1. Do not dump or store bulk materials near structures, utilities, walkways and pavements, or on existing turf areas or plants.
   2. Provide erosion-control measures to prevent erosion or displacement of bulk materials, discharge of soil-bearing water runoff, and airborne dust reaching adjacent properties, water conveyance systems, or walkways.
   3. Accompany each delivery of bulk fertilizers, lime, and soil amendments with appropriate certificates.

1.7 PROJECT CONDITIONS

A. Planting Restrictions: Plant during one of the following periods. Coordinate planting periods with initial maintenance periods to provide required maintenance from date of planting completion.
   1. Spring Planting: March 1-June 1.
   2. Fall Planting: September 15-November 1.

B. Weather Limitations: Proceed with planting only when existing and forecasted weather conditions permit planting to be performed when beneficial and optimum results may be obtained. Apply products during favorable weather conditions according to manufacturer's written instructions.

1.8 MAINTENANCE SERVICE

A. Initial Turf Maintenance Service: Provide full maintenance by skilled employees of landscape Installer. Maintain as required in Part 3. Begin maintenance immediately after each area is planted and continue until acceptable turf is established but for not less than the following periods:
   1. Seeded Turf: 60 days from date of Substantial Completion.
      a. When initial maintenance period has not elapsed before end of planting season, or if turf is not fully established, continue maintenance during next planting season.
   2. Sodded Turf: Until fully established and rooted, but no less than 60 days from date of Substantial Completion.

B. Continuing Maintenance Proposal: From Installer to Owner, in the form of a standard yearly (or other period) maintenance agreement, starting on date initial maintenance service is concluded. State services, obligations, conditions, and terms for agreement period and for future renewal options.

PART 2 – PRODUCTS

A. Turfgrass Sod: Number 1 Quality/Premium, including limitations on thatch, weeds, diseases, nematodes, and insects, complying with "Specifications for Turfgrass Sod Materials" in TPI's "Guideline Specifications to Turfgrass Sodding." Furnish viable sod of uniform density, color, and texture, strongly rooted, and capable of vigorous growth and development when planted.

B. Turfgrass Species: Turf Type Tall Fescue, improved variety.

2.2 INORGANIC SOIL AMENDMENTS

A. Lime: ASTM C 602, agricultural liming material containing a minimum of 80 percent calcium carbonate equivalent and as follows:
   1. Class: T, with a minimum of 99 percent passing through No. 8 sieve and a minimum of 75 percent passing through No. 60 sieve.
   2. Class: O, with a minimum of 95 percent passing through No. 8 sieve and a minimum of 55 percent passing through No. 60 sieve.
   3. Provide lime in form of ground dolomitic limestone or calcitic limestone.

B. Sulfur: Granular, biodegradable, containing a minimum of 90 percent sulfur, and with a minimum of 99 percent passing through No. 6 sieve and a maximum of 10 percent passing through No. 40 sieve.

C. Iron Sulfate: Granulated ferrous sulfate containing a minimum of 20 percent iron and 10 percent sulfur.

D. Aluminum Sulfate: Commercial grade, unadulterated.

E. Perlite: Horticultural perlite, soil amendment grade.

F. Agricultural Gypsum: Minimum 90 percent calcium sulfate, finely ground with 90 percent passing through No. 50 sieve.

G. Sand: Clean, washed, natural or manufactured, and free of toxic materials.

H. Diatomaceous Earth: Calcined, 90 percent silica, with approximately 140 percent water absorption capacity by weight.

I. Zeolites: Mineral clinoptilolite with at least 60 percent water absorption by weight.

2.3 ORGANIC SOIL AMENDMENTS

A. Compost: Well-composted, stable, and weed-free organic matter, pH range of 5.5 to 8; moisture content 35 to 55 percent by weight; 100 percent passing through 1/2-inch sieve; soluble salt content of 5 to 10 decisiemens/m; not exceeding 0.5 percent inert contaminants and free of substances toxic to plantings; and as follows:
   1. Organic Matter Content: 50 to 60 percent of dry weight.
   2. Feedstock: Agricultural, food, or industrial residuals; biosolids; yard trimmings; or source-separated or compostable mixed solid waste.

B. Sphagnum Peat: Partially decomposed sphagnum peat moss, finely divided or of granular texture, with a pH range of 3.4 to 4.8.

C. Muck Peat: Partially decomposed moss peat, native peat, or reed-sedge peat, finely divided or of granular texture, with a pH range of 6 to 7.5, and having a water-absorbing capacity of 1100 to 2000 percent.

D. Wood Derivatives: Decomposed, nitrogen-treated sawdust, ground bark, or wood waste; of uniform texture and free of chips, stones, sticks, soil, or toxic materials.
   1. In lieu of decomposed wood derivatives, mix partially decomposed wood derivatives with ammonium nitrate at a minimum rate of 0.15 lb/cu. ft. of loose sawdust or ground bark, or with ammonium sulfate at a minimum rate of 0.25 lb/cu. ft. of loose sawdust or ground bark.

E. Manure: Well-rotted, unleached, stable or cattle manure containing not more than 25 percent by volume of straw, sawdust, or other bedding materials; free of toxic substances, stones, sticks, soil, weed seed, and material harmful to plant growth.

2.4 FERTILIZERS

A. Bonemeal: Commercial, raw or steamed, finely ground; a minimum of 4 percent nitrogen and 10 percent phosphoric acid.

B. Superphosphate: Commercial, phosphate mixture, soluble; a minimum of 20 percent available phosphoric acid.

C. Commercial Fertilizer: Commercial-grade complete fertilizer of neutral character, consisting of fast- and slow-release nitrogen, 50 percent derived from natural organic sources of urea formaldehyde, phosphorous, and potassium in the following composition:
   1. Composition: 1 lb/1000 sq. ft. of actual nitrogen, 4 percent phosphorous, and 2 percent potassium, by weight.
   2. Composition: Nitrogen, phosphorous, and potassium in amounts recommended in soil reports from a qualified soil-testing laboratory.

D. Slow-Release Fertilizer: Granular or pelleted fertilizer consisting of 50 percent water-insoluble nitrogen, phosphorus, and potassium in the following composition:
   1. Composition: 20 percent nitrogen, 10 percent phosphorous, and 10 percent potassium, by weight.
   2. Composition: Nitrogen, phosphorous, and potassium in amounts recommended in soil reports from a qualified soil-testing laboratory.

2.5 PLANTING SOILS

A. Planting Soil: Existing, native surface topsoil formed under natural conditions with the duff layer retained during excavation process and stockpiled on-site. Verify suitability of native surface topsoil to produce viable planting soil. Clean soil of roots, plants, sod, stones, clay lumps, and other extraneous materials harmful to plant growth.
   1. Supplement with another specified planting soil when quantities are insufficient.
   2. Mix existing, native surface topsoil with the following soil amendments and fertilizers per soil test recommendations.

B. Planting Soil: Existing, in-place surface soil. Verify suitability of existing surface soil to produce viable planting soil. Remove stones, roots, plants, sod, clods, clay lumps, pockets of coarse sand, concrete slurry, concrete layers or chunks, cement, plaster, building debris, and other extraneous materials harmful to plant growth. Mix surface soil with the following soil amendments and fertilizers per soil test recommendations:

C. Planting Soil: Imported topsoil or manufactured topsoil from off-site sources. Obtain topsoil displaced from naturally well-drained construction or mining sites where topsoil occurs at least 4 inches deep; do not obtain from agricultural land, bogs or marshes.
   1. Additional Properties of Imported Topsoil or Manufactured Topsoil: Screened and free of stones 1 inch or larger in any dimension; free of roots, plants, sod, clods, clay lumps, pockets of coarse sand, paint, paint washout, concrete slurry, concrete layers or chunks, cement, plaster, building debris, oils, gasoline, diesel fuel, paint thinner, turpentine, tar, roofing compound, acid, and other extraneous materials harmful to plant growth; free of obnoxious weeds and invasive plants including quackgrass, Johnsongrass, poison ivy, nutsedge, nimblewill, Canada thistle, bindweed, bentgrass, wild garlic, ground ivy, perennial sorrel, and bromegrass; not infested with nematodes, grubs, other pests, pest eggs, or other undesirable organisms and disease-causing plant pathogens; friable and with sufficient structure to give good tilth and aeration. Continuous, air-filled, pore-space content on a volume/volume basis shall be at least 15 percent when moisture is present at field capacity. Soil shall have a field capacity of at least 15 percent on a dry weight basis.
   2. Mix imported topsoil or manufactured topsoil with the following soil amendments and fertilizers per soil test recommendations.
   3. Soil texture classification shall be sandy loam defined by the soil texture triangle. Soil pH to be 6.0-7.0

2.6 MULCHES

A. Fiber Mulch: Biodegradable, dyed-wood, cellulose-fiber mulch; nontoxic and free of plant-growth or germination inhibitors; with a maximum moisture content of 15 percent and a pH range of 4.5 to 6.5.

B. Nonasphaltic Tackifier: Colloidal tackifier recommended by fiber-mulch manufacturer for slurry application; nontoxic and free of plant-growth or germination inhibitors.

C. Asphalt Emulsion: ASTM D 977, Grade SS-1; nontoxic and free of plant-growth or germination inhibitors.

2.7 PESTICIDES

A. General: Pesticide, registered and approved by EPA, acceptable to authorities having jurisdiction, and of type recommended by manufacturer for each specific problem and as required for Project conditions and application. Do not use restricted pesticides unless authorized in writing by authorities having jurisdiction.

B. Pre-Emergent Herbicide (Selective and Non-Selective): Effective for controlling the germination or growth of weeds within planted areas at the soil level directly below the mulch layer.

C. Post-Emergent Herbicide (Selective and Non-Selective): Effective for controlling weed growth that has already germinated.

2.8 EROSION-CONTROL MATERIALS

A. Erosion-Control Blankets: Refer to plan sheet.

2.9 GRASS-PAVING MATERIALS

A. Grass Paving: None for this site.

PART 3 – EXECUTION

3.1 EXAMINATION

A. Examine areas to be planted for compliance with requirements and other conditions affecting performance.
   1. Verify that no foreign or deleterious material or liquid such as paint, paint washout, concrete slurry, concrete layers or chunks, cement, plaster, oils, gasoline, diesel fuel, paint thinner, turpentine, tar, roofing compound, or acid has been deposited in soil within a planting area.
   2. Do not mix or place soils and soil amendments in frozen, wet, or muddy conditions.
   3. Suspend soil spreading, grading, and tilling operations during periods of excessive soil moisture until the moisture content reaches acceptable levels to attain the required results.
   4. Uniformly moisten excessively dry soil that is not workable and which is too dusty.

B. Proceed with installation only after unsatisfactory conditions have been corrected.

C. If contamination by foreign or deleterious material or liquid is present in soil within a planting area, remove the soil and contamination as directed by Architect and replace with new planting soil.

3.2 PREPARATION

A. Protect structures, utilities, sidewalks, pavements, and other facilities, trees, shrubs, and plantings from damage caused by planting operations.
   1. Protect adjacent and adjoining areas from hydroseeding and hydromulching overspray.
   2. Protect grade stakes set by others until directed to remove them.

B. Install erosion-control measures to prevent erosion or displacement of soils and discharge of soil-bearing water runoff or airborne dust to adjacent properties and walkways.

3.3 TURF AREA PREPARATION

A. Limit turf subgrade preparation to areas to be planted.

B. Newly Graded Subgrades: Loosen subgrade to a minimum depth of 6 inches Remove stones larger than 1 inch in any dimension and sticks, roots, rubbish, and other extraneous matter and legally dispose of them off Owner's property.
   1. Apply superphosphate fertilizer directly to subgrade before loosening.
   2. Thoroughly blend planting soil off-site before spreading or spread topsoil, apply soil amendments and fertilizer on surface, and thoroughly blend planting soil.
      a. Delay mixing fertilizer with planting soil if planting will not proceed within a few days.
      b. Mix lime with dry soil before mixing fertilizer.
   3. Spread planting soil to a depth of 6 inches but not less than required to meet finish grades after light rolling and natural settlement. Do not spread if planting soil or subgrade is frozen, muddy, or excessively wet.
      a. Spread approximately 1/2 the thickness of planting soil over loosened subgrade. Mix thoroughly into top 2 inches of subgrade. Spread remainder of planting soil.
      b. Reduce elevation of planting soil to allow for soil thickness of sod.

C. Unchanged Subgrades: If turf is to be planted in areas unaltered or undisturbed by excavating, grading, or surface-soil stripping operations, prepare surface soil as follows:
   1. Remove existing grass, vegetation, and turf. Do not mix into surface soil.
   2. Loosen surface soil to a depth of at least 6 inches Apply soil amendments and fertilizers according to planting soil mix proportions and mix thoroughly into top 4 inches of soil. Till soil to a homogeneous mixture of fine texture.
      a. Apply superphosphate fertilizer directly to surface soil before loosening.
   3. Remove stones larger than 1 inch in any dimension and sticks, roots, trash, and other extraneous matter.

4. Legally dispose of waste material, including grass, vegetation, and turf, off Owner's property.

D. Finish Grading: Grade planting areas to a smooth, uniform surface plane with loose, uniformly fine texture. Grade to within plus or minus 1/2 inch of finish elevation. Roll and rake, remove ridges, and fill depressions to meet finish grades. Limit finish grading to areas that can be planted in the immediate future.

E. Moisten prepared area before planting if soil is dry. Water thoroughly and allow surface to dry before planting. Do not create muddy soil.

F. Before planting, obtain Architect's acceptance of finish grading; restore planting areas if eroded or otherwise disturbed after finish grading.

3.4 PREPARATION FOR EROSION-CONTROL MATERIALS

A. Prepare area as specified in "Turf Area Preparation" Article.

B. For erosion-control blanket or mesh, install from top of slope, working downward, and as recommended by material manufacturer for site conditions. Fasten as recommended by material manufacturer.

C. Moisten prepared area before planting if surface is dry. Water thoroughly and allow surface to dry before planting. Do not create muddy soil.

3.5 SODDING

A. Lay sod within 24 hours of harvesting. Do not lay sod if dormant or if ground is frozen or muddy.

B. Lay sod to form a solid mass with tightly fitted joints. Butt ends and sides of sod; do not stretch or overlap. Stagger sod strips or pads to offset joints in adjacent courses. Avoid damage to subgrade or sod during installation. Tamp and roll lightly to ensure contact with subgrade, eliminate air pockets, and form a smooth surface. Work sifted soil or fine sand into minor cracks between pieces of sod; remove excess to avoid smothering sod and adjacent grass.
   1. Lay sod across angle of slopes exceeding 1:3.
   2. Anchor sod on slopes exceeding 1:6 with wood pegs or steel staples spaced as recommended by sod manufacturer but not less than 2 anchors per sod strip to prevent slippage.

C. Saturate sod with fine water spray within two hours of planting. During first week after planting, water daily or more frequently as necessary to maintain moist soil to a minimum depth of four (4) inches below sod.

3.6 TURF RENOVATION

A. Renovate existing turf.

B. Renovate existing turf damaged by Contractor's operations, such as storage of materials or equipment and movement of vehicles.
   1. Reestablish turf where settlement or washouts occur or where minor regrading is required.
   2. Install new planting soil as required.

C. Remove sod and vegetation from diseased or unsatisfactory turf areas; do not bury in soil.

D. Remove topsoil containing foreign materials such as oil drippings, fuel spills, stones, gravel, and other construction materials resulting from Contractor's operations, and replace with new planting soil.

E. Mow, dethatch, core aerate, and rake existing turf.

F. Remove weeds before seeding. Where weeds are extensive, apply selective herbicides as required. Do not use pre-emergence herbicides.

G. Remove waste and foreign materials, including weeds, soil cores, grass, vegetation, and turf, and legally dispose of them off Owner's property.

H. Till stripped, bare, and compacted areas thoroughly to a soil depth of 6 inches.

I. Apply soil amendments and initial fertilizers required for establishing new turf and mix thoroughly into top 4 inches of existing soil. Install new planting soil to fill low spots and meet finish grades.

J. Apply seed and protect with straw mulch and sod as required for new turf.

K. Water newly planted areas and keep moist until new turf is established.

3.7 TURF MAINTENANCE

A. Maintain and establish turf by watering, fertilizing, weeding, mowing, trimming, replanting, and performing other operations as required to establish healthy, viable turf. Roll, regrade, and replant bare or eroded areas and remulch to produce a uniformly smooth turf. Provide materials and installation the same as those used in the original installation.
   1. Fill in as necessary soil subsidence that may occur because of settling or other processes. Replace materials and turf damaged or lost in areas of subsidence.
   2. In areas where mulch has been disturbed by wind or maintenance operations, add new mulch and anchor as required to prevent displacement.
   3. Apply treatments as required to keep turf and soil free of pests and pathogens or disease. Use integrated pest management practices whenever possible to minimize the use of pesticides and reduce hazards.

B. Watering: Install and maintain temporary piping, hoses, and turf-watering equipment to convey water from sources and to keep turf uniformly moist to a depth of 4 inches.
   1. Schedule watering to prevent wilting, puddling, erosion, and displacement of seed or mulch. Lay out temporary watering system to avoid walking over muddy or newly planted areas.
   2. Water turf with fine spray at a minimum rate of 1 inch per week unless rainfall precipitation is adequate.

C. Mow turf as soon as top growth is tall enough to cut. Repeat mowing to maintain specified height without cutting more than 1/3 of grass height. Remove no more than 1/3 of grass-leaf growth in initial or subsequent mowings. Do not delay mowing until grass blades bend over and become matted. Do not mow when grass is wet. Schedule initial and subsequent mowings to maintain the following grass height:
   1. Mow to a height of 2 to 3 inches.

D. Turf Postfertilization: Apply fertilizer after initial mowing and when grass is dry.
   1. Use fertilizer that will provide actual nitrogen of at least 1 lb/1000 sq. ft. to turf area.

3.8 SATISFACTORY TURF

A. Turf installations shall meet the following criteria as determined by Architect:
   1. Satisfactory Sodded Turf: At end of maintenance period, a healthy, well-rooted, even-colored, viable turf has been established, free of weeds, open joints, bare areas, and surface irregularities.

B. Use specified materials to reestablish turf that does not comply with requirements and continue maintenance until turf is satisfactory.

3.9 PESTICIDE APPLICATION

A. Apply pesticides and other chemical products and biological control agents in accordance with requirements of authorities having jurisdiction and manufacturer's written recommendations. Coordinate applications with Owner's operations and others in proximity to the Work. Notify Owner before each application is performed.

B. Post-Emergent Herbicides (Selective and Non-Selective): Apply only as necessary to treat already-germinated weeds and in accordance with manufacturer's written recommendations.

3.10CLEANUP AND PROTECTION

A. Promptly remove soil and debris created by turf work from paved areas. Clean wheels of vehicles before leaving site to avoid tracking soil onto roads, walks, or other paved areas.

B. Erect temporary fencing or barricades and warning signs as required to protect newly planted areas from traffic. Maintain fencing and barricades throughout initial maintenance period and remove after plantings are established.

C. Remove nondegradable erosion-control measures after grass establishment period.

END OF SECTION 329200

SECTION 329300 – PLANTS

PART 1 – GENERAL

1.1 RELATED DOCUMENTS

A. Drawings and general provisions of the Contract, including General and Supplementary Conditions and Division 01 Specification Sections, apply to this Section.

1.2 SUMMARY

A. Section Includes:
   1. Plants.
   2. Planting soils.
   3. Tree stabilization.
   4. Landscape edgings.

B. Related Sections:
   1. Division 01 Section "Temporary Tree and Plant Protection" for protecting, trimming, pruning, repairing, and replacing existing trees to remain that interfere with, or are affected by, execution of the Work.
   2. Division 31 Section "Site Clearing" for protection of existing trees and plantings, topsoil stripping and stockpiling, and site clearing.
   3. Division 31 Section "Earth Moving" for excavation, filling, and rough grading and for subsurface aggregate drainage and drainage backfill materials.
   4. Division 32 Section "Turf and Grasses" for turf (lawn) and meadow planting, hydro seeding, and erosion-control materials.
   5. Division 33 Section "Sub drainage" for below-grade drainage of landscaped areas, paved areas, and wall perimeters.

1.3 DEFINITIONS

A. Backfill: The earth used to replace or the act of replacing earth in an excavation.

B. Balled and Burlapped Stock: Plants dug with firm, natural balls of earth in which they were grown, with ball size not less than sizes indicated; wrapped with burlap, tied, rigidly supported, and drum laced with twine with the root flare visible at the surface of the ball as recommended by ANSI Z60.1.

C. Balled and Potted Stock: Plants dug with firm, natural balls of earth in which they are grown and placed, unbroken, in a container. Ball size is not less than sizes indicated.

D. Bare-Root Stock: Plants with a well-branched, fibrous-root system developed by transplanting or root pruning, with soil or growing medium removed, and with not less than minimum root spread according to ANSI Z60.1 for type and size of plant required.

E. Container-Grown Stock: Healthy, vigorous, well-rooted plants grown in a container, with a well-established root system reaching sides of container and maintaining a firm ball when removed from container. Container shall be rigid enough to hold ball shape and protect root mass during shipping and be sized according to ANSI Z60.1 for type and size of plant required.

F. Duff Layer: The surface layer of native topsoil that is composed of mostly decayed leaves, twigs, and detritus.

G. Fabric Bag-Grown Stock: Healthy, vigorous, well-rooted plants established and grown in-ground in a porous fabric bag with well-established root system reaching sides of fabric bag. Fabric bag size is not less than diameter, depth, and volume required by ANSI Z60.1 for type and size of plant.

H. Finish Grade: Elevation of finished surface of planting soil.

I. Manufactured Topsoil: Soil produced off-site by homogeneously blending mineral soils or sand with stabilized organic soil amendments to produce topsoil or planting soil.

J. Pesticide: A substance or mixture intended for preventing, destroying, repelling, or mitigating a pest. This includes insecticides, miticides, herbicides, fungicides, rodenticides, and molluscicides. It also includes substances or mixtures intended for use as a plant regulator, defoliant, or desiccant.

K. Pests: Living organisms that occur where they are not desired, or that cause damage to plants, animals, or people. These include insects, mites, grubs, mollusks (snails and slugs), rodents (gophers, moles, and mice), unwanted plants (weeds), fungi, bacteria, and viruses.

L. Planting Area: Areas to be planted.

M. Planting Soil: Standardized topsoil; existing, native surface topsoil; existing, in-place surface soil; imported topsoil; or manufactured topsoil that is modified with soil amendments and perhaps fertilizers to produce a soil mixture best for plant growth.

N. Plant; Plants; Plant Material: These terms refer to vegetation in general, including trees, shrubs, vines, ground covers, ornamental grasses, bulbs, corms, tubers, or herbaceous vegetation.

O. Root Flare: Also called "trunk flare." The area at the base of the plant's stem or trunk where the stem or trunk broadens to form roots; the area of transition between the root system and the stem or trunk.

P. Stem Girdling Roots: Roots that encircle the stems (trunks) of trees below the soil surface.

Q. Subgrade: Surface or elevation of subsoil remaining after excavation is complete, or the top surface of a fill or backfill before planting soil is placed.

R. Subsoil: All soil beneath the topsoil layer of the soil profile, and typified by the lack of organic matter and soil organisms.

S. Surface Soil: Soil that is present at the top layer of the existing soil profile at the Project site. In undisturbed areas, the surface soil is typically topsoil; but in disturbed areas such as urban environments, the surface soil can be subsoil.

1.4 SUBMITTALS

A. Product Data: For each type of product indicated, including soils.
   1. Plant Materials: Include a purchase order from the supplier(s) with the botanical and common names, quantities, and sizes of plant materials for this specific project.
   2. Pesticides and Herbicides: Include product label and manufacturer's application instructions specific to the Project.

B. Samples for Verification: For each of the following:
   1. Trees and Shrubs: Three samples of each variety and size delivered to the site for review. Maintain approved samples on-site as a standard for comparison.
   2. Compost Mulch: 1-pint volume of each organic mulch required; in sealed plastic bags labeled with composition of materials by percentage of weight and source of mulch. Each Sample shall be typical of the lot of material to be furnished; provide an accurate representation of color, texture, and organic makeup.
   3. Mineral Mulch: 2 lb of each mineral mulch required, in sealed plastic bags labeled with source of mulch. Sample shall be typical of the lot of material to be delivered and installed on the site; provide an accurate indication of color, texture, and makeup of the material.
   4. Weed Control Barrier: 12 by 12 inches.

C. Qualification Data: For qualified landscape Installer. Include list of similar projects completed by Installer demonstrating Installer's capabilities and experience. Include project names, addresses, and year completed, and include names and addresses of owners' contact persons.

D. Product Certificates: For each type of manufactured product, from manufacturer, and complying with the following:
   1. Manufacturer's certified analysis of standard products.
   2. Analysis of other materials by a recognized laboratory made according to methods established by the Association of Official Analytical Chemists, where applicable.

E. Material Test Reports: For standardized ASTM D 5268 topsoil, existing native surface topsoil and imported or manufactured topsoil.

F. Maintenance Instructions: Recommended procedures to be established by Owner for maintenance of plants during a calendar year. Submit before start of required maintenance periods.

G. Warranty: Sample of special warranty.

1.5 QUALITY ASSURANCE

A. Installer Qualifications: A qualified landscape Installer whose work has resulted in successful establishment of plants.
   1. Experience: Three years' experience in landscape installation in addition to requirements in Division 01 Section "Quality Requirements."
   2. Installer's Field Supervision: Require Installer to maintain an experienced full-time supervisor on Project site when work is in progress.
   3. Personnel Certifications: Installer's field supervisor shall have certification in one of the following categories from the Professional Landcare Network:
      a. Certified Landscape Technician - Exterior, with installation, maintenance and irrigation specialty area(s), designated CLT-Exterior.
      b. Certified Landscape Technician - Interior, designated CLT-Interior.
      c. Certified Ornamental Landscape Professional, designated COLP.
   4. Pesticide Applicator: State licensed, commercial.

B. Soil-Testing Laboratory Qualifications: An independent or university laboratory, recognized by the State Department of Agriculture, with the experience and capability to conduct the testing indicated and that specializes in types of tests to be performed.

C. Soil Analysis: For each unamended soil type, furnish soil analysis and a written report by a qualified soil-testing laboratory stating percentages of organic matter; gradation of sand, silt, and clay content; cation exchange capacity; sodium absorption ratio; deleterious material; pH; and mineral and plant-nutrient content of the soil.
   1. Testing methods and written recommendations shall comply with USDA's Handbook No. 60.

2. The soil-testing laboratory shall oversee soil sampling; with depth, location, and number of samples to be taken per instructions from Landscape Architect. A minimum of three representative samples shall be taken from varied locations for each soil to be used or amended for planting purposes.
3. Report suitability of tested soil for plant growth.
    a. Based upon the test results, state recommendations for soil treatments and soil amendments to be incorporated. State recommendations in weight per 1000 sq. ft. or volume per cu. yd. for nitrogen, phosphorus, and potash nutrients and soil amendments to be added to produce satisfactory planting soil suitable for healthy, viable plants.
    b. Report presence of problem salts, minerals, or heavy metals, including aluminum, arsenic, barium, cadmium, chromium, cobalt, lead, lithium, and vanadium. If such problem materials are present, provide additional recommendations for corrective action.

D. Provide quality, size, genus, species, and variety of plants indicated, complying with applicable requirements in ANSI Z60.1.
    1. Selection of plants purchased under allowances will be made by Landscape architect, who will tag plants at their place of growth before they are prepared for transplanting.

E. Measurements: Measure according to ANSI Z60.1. Do not prune to obtain required sizes.
    1. Trees and Shrubs: Measure with branches and trunks or canes in their normal position. Take height measurements from or near the top of the root flare for field-grown stock and container grown stock. Measure main body of tree or shrub for height and spread; do not measure branches or roots tip to tip. Take caliper measurements 6 inches above the root flare for trees up to 4-inch caliper size, and 12 inches above the root flare for larger sizes.
    2. Other Plants: Measure with stems, petioles, and foliage in their normal position.

F. Plant Material Observation: Landscape architect may observe plant material either at place of growth or at site before planting for compliance with requirements for genus, species, variety, cultivar, size, and quality. Landscape architect retains right to observe trees and shrubs further for size and condition of balls and root systems, pests, disease symptoms, injuries, and latent defects and to reject unsatisfactory or defective material at any time during progress of work. Remove rejected trees or shrubs immediately from Project site.
    1. Notify Landscape architect of sources of planting materials seven days in advance of delivery to site.

G. Preinstallation Conference: Conduct conference at a location to be determined.

1.6 DELIVERY, STORAGE, AND HANDLING

A. Packaged Materials: Deliver packaged materials in original, unopened containers showing weight, certified analysis, name and address of manufacturer, and indication of conformance with state and federal laws if applicable.

B. Bulk Materials:
   1. Do not dump or store bulk materials near structures, utilities, walkways and pavements, or on existing turf areas or plants.
   2. Provide erosion-control measures to prevent erosion or displacement of bulk materials, discharge of soil-bearing water runoff, and airborne dust reaching adjacent properties, water conveyance systems, or walkways.
   3. Accompany each delivery of bulk fertilizers, lime, and soil amendments with appropriate certificates.

C. Deliver bare-root stock plants freshly dug. Immediately after digging up bare-root stock, pack root system in wet straw, hay, or other suitable material to keep root system moist until planting.

D. Do not prune trees and shrubs before delivery. Protect bark, branches, and root systems from sun scald, drying, wind burn, sweating, whipping, and other handling and tying damage. Do not bend or bind-tie trees or shrubs in such a manner as to destroy their natural shape. Provide protective covering of plants during shipping and delivery. Do not drop plants during delivery and handling.

E. Handle planting stock by root ball.

F. Store bulbs, corms, and tubers in a dry place at 60 to 65 deg F until planting.

G. Deliver plants after preparations for planting have been completed, and install immediately. If planting is delayed more than six hours after delivery, set plants and trees in their appropriate aspect (sun, filtered sun, or shade), protect from weather and mechanical damage, and keep roots moist.
   1. Heel-in bare-root stock. Soak roots that are in dry condition in water for two hours. Reject dried-out plants.
   2. Set balled stock on ground and cover ball with soil, peat moss, sawdust, or other acceptable material.
   3. Do not remove container-grown stock from containers before time of planting.
   4. Water root systems of plants stored on-site deeply and thoroughly with a fine-mist spray. Water as often as necessary to maintain root systems in a moist, but not overly-wet condition.

1.7 PROJECT CONDITIONS

A. Field Measurements: Verify actual grade elevations, service and utility locations, irrigation system components, and dimensions of plantings and construction contiguous with new plantings by field measurements before proceeding with planting work.

B. Interruption of Existing Services or Utilities: Do not interrupt services or utilities to facilities occupied by Owner or others unless permitted under the following conditions and then only after arranging to provide temporary services or utilities according to requirements indicated:
   1. Notify Landscape Architect or Owner's Representative no fewer than two days in advance of proposed interruption of each service or utility.
   2. Do not proceed with interruption of services or utilities without Owner's Representative written permission.

C. Planting Restrictions: Plant during one of the following periods. Coordinate planting periods with maintenance periods to provide required maintenance from date of Substantial Completion.
   1. Spring Planting: March 1st to June 1st.
   2. Fall Planting: September 1st to November 1st.

D. Weather Limitations: Proceed with planting only when existing and forecasted weather conditions permit planting to be performed when beneficial and optimum results may be obtained. Apply products during favorable weather conditions according to manufacturer's written instructions and warranty requirements.

E. Coordination with Turf Areas (Lawns): Plant trees, shrubs, and other plants after finish grades are established and before planting turf areas unless otherwise indicated.
   1. When planting trees, shrubs, and other plants after planting turf areas, protect turf areas, and promptly repair damage caused by planting operations.

1.8 WARRANTY

A. Special Warranty: Installer agrees to repair or replace plantings and accessories that fail in materials, workmanship, or growth within specified warranty period.
   1. Failures include, but are not limited to, the following:
      a. Death and unsatisfactory growth, except for defects resulting from abuse, lack of adequate maintenance, or neglect by Owner, or incidents that are beyond Contractor's control.
      b. Structural failures including plantings falling or blowing over.
      c. Faulty performance of tree stabilization, edgings and tree grates.
      d. Deterioration of metals, metal finishes, and other materials beyond normal weathering.

2. Warranty Periods from Date of Substantial Completion:
    a. Trees, Shrubs, Vines, and Ornamental Grasses: 12 months.
    b. Ground Covers, Biennials, Perennials, and Other Plants: 12 months.
    c. Annuals: Three months.
3. Include the following remedial actions as a minimum:
    a. Immediately remove dead plants and replace unless required to plant in the succeeding planting season.
    b. Replace plants that are more than 25 percent dead or in an unhealthy condition at end of warranty period.
    c. A limit of one replacement of each plant will be required except for losses or replacements due to failure to comply with requirements.
    d. Provide extended warranty for period equal to original warranty period, for replaced plant material.

1.9 MAINTENANCE SERVICE

A. Initial Maintenance Service for Trees and Shrubs: Provide maintenance by skilled employees of landscape Installer. Maintain as required in Part 3. Begin maintenance immediately after plants are installed and continue until plantings are acceptably healthy and well established but for not less than maintenance period below.
    1. Maintenance Period: 12 months from date of Substantial Completion.

B. Initial Maintenance Service for Ground Cover and Other Plants: Provide maintenance by skilled employees of landscape Installer. Maintain as required in Part 3. Begin maintenance immediately after plants are installed and continue until plantings are acceptably healthy and well established but for not less than maintenance period below.
    1. Maintenance Period: Six months from date of Substantial Completion.

C. Continuing Maintenance Proposal: From Installer to Owner, in the form of a standard yearly (or other period) maintenance agreement, starting on date initial maintenance service is concluded. State services, obligations, conditions, and terms for agreement period and for future renewal options.

PART 2 PRODUCTS

2.1 PLANT MATERIAL

A. General: Furnish nursery-grown plants true to genus, species, variety, cultivar, stem form, shearing, and other features indicated in Plant Schedule or Plant Legend shown on Drawings and complying with ANSI Z60.1; and with healthy root systems developed by transplanting or root pruning. Provide well-shaped, fully branched, healthy, vigorous stock, densely foliated when in leaf and free of disease, pests, eggs, larvae, and defects such as knots, sun scald, injuries, abrasions, and disfigurement.
   1. Trees with damaged, crooked, or multiple leaders; tight vertical branches where bark is squeezed between two branches or between branch and trunk ("included bark"); crossing trunks; cut-off limbs more than 3/4 inch in diameter; or with stem girdling roots will be rejected.
   2. Collected Stock: Do not use plants harvested from the wild, from native stands, from an established landscape planting, or not grown in a nursery unless otherwise indicated.

B. Provide plants of sizes, grades, and ball or container sizes complying with ANSI Z60.1 for types and form of plants required. Plants of a larger size may be used if acceptable to Landscape Architect, with a proportionate increase in size of roots or balls.

C. Root-Ball Depth: Furnish trees and shrubs with root balls measured from top of root ball, which shall begin at root flare according to ANSI Z60.1. Root flare shall be visible before planting.

D. Labeling: Label at least one plant of each variety, size, and caliper with a securely attached, waterproof tag bearing legible designation of common name and full scientific name, including genus and species. Include nomenclature for hybrid, variety, or cultivar, if applicable for the plant as shown on Drawings.

E. If formal arrangements or consecutive order of plants is shown on Drawings, select stock for uniform height and spread, and number the labels to assure symmetry in planting.

F. Annuals and Biennials: Provide healthy, disease-free plants of species and variety shown or listed, with well-established root systems reaching to sides of the container to maintain a firm ball, but not with excessive root growth encircling the container. Provide only plants that are acclimated to outdoor conditions before delivery.

2.2 INORGANIC SOIL AMENDMENTS

A. Lime: ASTM C 602, agricultural liming material containing a minimum of 80 percent calcium carbonate equivalent and as follows:
   1. Class: T, with a minimum of 99 percent passing through No. 8 sieve and a minimum of 75 percent passing through No. 60 sieve.
   2. Class: O, with a minimum of 95 percent passing through No. 8 sieve and a minimum of 55 percent passing through No. 60 sieve.
   3. Provide lime in form of ground dolomitic limestone or calcitic limestone.

B. Sulfur: Granular, biodegradable, and containing a minimum of 90 percent sulfur, with a minimum of 99 percent passing through No. 6 sieve and a maximum of 10 percent passing through No. 40 sieve.

C. Iron Sulfate: Granulated ferrous sulfate containing a minimum of 20 percent iron and 10 percent sulfur.

D. Aluminum Sulfate: Commercial grade, unadulterated.

E. Perlite: Horticultural perlite, soil amendment grade.

F. Agricultural Gypsum: Minimum 90 percent calcium sulfate, finely ground with 90 percent passing through No. 50 sieve.

G. Sand: Clean, washed, natural or manufactured, and free of toxic materials.

H. Diatomaceous Earth: Calcined, 90 percent silica, with approximately 140 percent water absorption capacity by weight.

I. Zeolites: Mineral clinoptilolite with at least 60 percent water absorption by weight.

2.3 ORGANIC SOIL AMENDMENTS

A. Compost: Well-composted, stable, and weed-free organic matter, pH range of 5.5 to 8; moisture content 35 to 55 percent by weight; 100 percent passing through 1-inch sieve; soluble salt content of 5 to 10 decisiemens/m; not exceeding 0.5 percent inert contaminants and free of substances toxic to plantings; and as follows:
   1. Organic Matter Content: 50 to 60 percent of dry weight.
   2. Feedstock: Agricultural, food, or industrial residuals; biosolids; yard trimmings; or source-separated or compostable mixed solid waste.

B. Wood Derivatives: Decomposed, nitrogen-treated sawdust, ground bark, or wood waste; of uniform texture and free of chips, stones, sticks, soil, or toxic materials.

1. In lieu of decomposed wood derivatives, mix partially decomposed wood derivatives with ammonium nitrate at a minimum rate of 0.15 lb/cu. ft. of loose sawdust or ground bark, or with ammonium sulfate at a minimum rate of 0.25 lb/cu. ft. of loose sawdust or ground bark.

C. Manure: Well-rotted, unleached, stable or cattle manure containing not more than 25 percent by volume of straw, sawdust, or other bedding materials; free of toxic substances, stones, sticks, soil, weed seed, debris, and material harmful to plant growth.

2.4 FERTILIZERS

A. Bonemeal: Commercial, raw or steamed, finely ground; a minimum of 1 percent nitrogen and 10 percent phosphoric acid.

B. Superphosphate: Commercial, phosphate mixture, soluble; a minimum of 20 percent available phosphoric acid.

C. Commercial Fertilizer: Commercial-grade complete fertilizer of neutral character, consisting of fast- and slow-release nitrogen, 50 percent derived from natural organic sources of urea formaldehyde, phosphorous, and potassium in the following composition:
   1. Composition: 1 lb/1000 sq. ft. of actual nitrogen, 4 percent phosphorous, and 2 percent potassium, by weight.
   2. Composition: Nitrogen, phosphorous, and potassium in amounts recommended in soil reports from a qualified soil-testing laboratory.

D. Slow-Release Fertilizer: Granular or pelleted fertilizer consisting of 50 percent water-insoluble nitrogen, phosphorus, and potassium in the following composition:
   1. Composition: 20 percent nitrogen, 10 percent phosphorous, and 10 percent potassium, by weight.
   2. Composition: Nitrogen, phosphorous, and potassium in amounts recommended in soil reports from a qualified soil-testing laboratory.

E. Planting Tablets: Tightly compressed chip type, long-lasting, slow-release, commercial-grade planting fertilizer in tablet form. Tablets shall break down with soil bacteria, converting nutrients into a form that can be absorbed by plant roots.
   1. Size: 5-gram tablets.
   2. Nutrient Composition: 20 percent nitrogen, 10 percent phosphorous, and 5 percent potassium, by weight plus micronutrients.

F. Chelated Iron: Commercial-grade FeEDDHA for dicots and woody plants, and commercial-grade FeDTPA for ornamental grasses and monocots.

2.5 PLANTING SOILS

A. Planting Soil: Existing, native surface topsoil formed under natural conditions with the duff layer retained during excavation process and stockpiled on-site. Verify suitability of native surface topsoil to produce viable planting soil. Clean soil of roots, plants, sod, stones, clay lumps, and other extraneous materials harmful to plant growth.
   1. Supplement with another specified planting soil when quantities are insufficient.
   2. Mix existing, native surface topsoil with the following soil amendments and fertilizers per soil test recommendations.

B. Planting Soil: Existing, in-place surface soil. Verify suitability of existing surface soil to produce viable planting soil. Remove stones, roots, plants, sod, clods, clay lumps, pockets of coarse sand, concrete slurry, concrete layers or chunks, cement, plaster, building debris, and other extraneous materials harmful to plant growth. Mix surface soil with the following soil amendments and fertilizers per soil test recommendations:

C. Planting Soil: Imported topsoil or manufactured topsoil from off-site sources. Obtain topsoil displaced from naturally well-drained construction or mining sites where topsoil occurs at least 4 inches deep; do not obtain from agricultural land, bogs or marshes.
   1. Additional Properties of Imported Topsoil or Manufactured Topsoil: Screened and free of stones 1 inch or larger in any dimension; free of roots, plants, sod, clods, clay lumps, pockets of coarse sand, paint, paint washout, concrete slurry, concrete layers or chunks, cement, plaster, building debris, oils, gasoline, diesel fuel, paint thinner, turpentine, tar, roofing compound, acid, and other extraneous materials harmful to plant growth; free of obnoxious weeds and invasive plants including quackgrass, Johnsongrass, poison ivy, nutsedge, nimblewill, Canada thistle, bindweed, bentgrass, wild garlic, ground ivy, perennial sorrel, and bromegrass; not infested with nematodes, grubs, other pests, pest eggs, or other undesirable organisms and disease-causing plant pathogens; friable and with sufficient structure to give good tilth and aeration. Continuous, air-filled, pore-space content on a volume/volume basis shall be at least 15 percent when moisture is present at field capacity. Soil shall have a field capacity of at least 15 percent on a dry weight basis.
   2. Mix imported topsoil or manufactured topsoil with the following soil amendments and fertilizers per soil test recommendations.
   3. Soil texture classification shall be sandy loam defined by the soil texture triangle. Soil pH to be 6.0-7.0

2.6 MULCHES

A. Compost Mulch: Well-composted, stable, and weed-free organic matter, pH range of 5.5 to 8; moisture content 35 to 55 percent by weight; 100 percent passing through 1-inch sieve; soluble salt content of 2 to 5 decisiemens/m; not exceeding 0.5 percent inert contaminants and free of substances toxic to plantings; and as follows:
   1. Organic Matter Content: 50 to 60 percent of dry weight.
   2. Feedstock: Agricultural, food, or industrial residuals; biosolids; yard trimmings; or source-separated or compostable mixed solid waste.

B. Organic Mulch: Free from deleterious materials and suitable as a top dressing of trees and shrubs, consisting of one of the following:
   1. Type: Shredded hardwood
   2. Size Range: [3 inches maximum, 1/2 inch minimum.
   3. Color: Natural.

C. Mineral Mulch: Refer to plan for location of each type; and as follows:
   1. River Stone: Clean, washed, 1"-2" diameter.

2.7 EROSION CONTROL MATERIAL

A. Erosion Control Fabric: North American Green C700BN, or approved equal, installed per manufacturer’s recommendations.

2.8 WEED-CONTROL BARRIERS

A. Composite Fabric: As noted on the plan.

2.9 PESTICIDES

A. General: Pesticide registered and approved by EPA, acceptable to authorities having jurisdiction, and of type recommended by manufacturer for each specific problem and as required for Project conditions and application. Do not use restricted pesticides unless authorized in writing by authorities having jurisdiction.

B. Pre-Emergent Herbicide (Selective and Non-Selective): Effective for controlling the germination or growth of weeds within planted areas at the soil level directly below the mulch layer.

C. Post-Emergent Herbicide (Selective and Non-Selective): Effective for controlling weed growth that has already germinated.

2.10 TREE STABILIZATION MATERIALS

A. Stakes and Guys:
   1. Upright and Guy Stakes: Rough-sawn, sound, new hardwood, free of knots, holes, cross grain, and other defects, 2-by-2-inch nominal by length indicated, pointed at one end.
   2. Flexible Ties: Wide rubber or elastic bands or straps of length required to reach stakes or turnbuckles.
   3. Guys and Tie Wires: ASTM A 641/A 641M, Class 1, galvanized-steel wire, two-strand, twisted, 0.106 inch in diameter.
   4. Tree-Tie Webbing: UV-resistant polypropylene or nylon webbing with brass grommets.
   5. Guy Cables: Five-strand, 3/16-inch- diameter, galvanized-steel cable, with zinc-coated turnbuckles, a minimum of 3 inches long, with two 3/8-inch galvanized eyebolts.
   6. Flags: Standard surveyor's plastic flagging tape, white, 6 inches long.
   7. Proprietary Staking-and-Guying Devices: Proprietary stake and adjustable tie systems to secure each new planting by plant stem; sized as indicated and per manufacturer's written recommendations.
      a. Products: Subject to compliance with requirements, available products that may be incorporated into the Work include, but are not limited to the following:
         1) Arborbrace; ArborBrace Tree Guying System.
         2) Decorations for Generations, Inc.; Reddy Stake or Mega Stake System.

B. Root-Ball Stabilization Materials:
   1. Upright Stakes and Horizontal Hold-Down: Rough-sawn, sound, new hardwood or softwood, free of knots, holes, cross grain, and other defects, 2-by-2-inch nominal by length indicated; stakes pointed at one end.
   2. Wood Screws: ASME B18.6.1.
   3. Proprietary Root-Ball Stabilization Devices: Proprietary at- or below-grade stabilization systems to secure each new planting by root ball; sized per manufacturer's written recommendations unless otherwise indicated.
      a. Products: Subject to compliance with requirements, available products that may be incorporated into the Work include, but are not limited to, the following:
         1) Border Concepts, Inc.; Tomahawk Tree Stabilizers.
         2) Foresight Products, LLC; Duckbill Rootball Fixing System.
         3) Tree Staple, Inc.; Tree Staples.

2.11 MISCELLANEOUS PRODUCTS

A. Metal Edging: 3/16" x 4", bronze or brown color, L-shaped paving restraint Permastrip Edge by Permaloc (or approved equal).

B. Wood Pressure-Preservative Treatment: AWPA C2, with waterborne preservative for soil and freshwater use, acceptable to authorities having jurisdiction, and containing no arsenic; including ammoniacal copper arsenate, ammoniacal copper zinc arsenate, and chromated copper arsenate.

C. Antidesiccant: Water-insoluble emulsion, permeable moisture retarder, film forming, for trees and shrubs. Deliver in original, sealed, and fully labeled containers and mix according to manufacturer's written instructions.

D. Burlap: Non-synthetic, biodegradable.

E. Mycorrhizal Fungi: Dry, granular inoculant containing at least 5300 spores per lb of vesicular-arbuscular mycorrhizal fungi and 95 million spores per lb of ectomycorrhizal fungi, 33 percent hydrogel, and a maximum of 5.5 percent inert material.

PART 3 – EXECUTION

3.1 EXAMINATION

A. Examine areas to receive plants for compliance with requirements and conditions affecting installation and performance.
    1. Verify that no foreign or deleterious material or liquid such as paint, paint washout, concrete slurry, concrete layers or chunks, cement, plaster, oils, gasoline, diesel fuel, paint thinner, turpentine, tar, roofing compound, or acid has been deposited in soil within a planting area.
    2. Do not mix or place soils and soil amendments in frozen, wet, or muddy conditions.
    3. Suspend soil spreading, grading, and tilling operations during periods of excessive soil moisture until the moisture content reaches acceptable levels to attain the required results.
    4. Uniformly moisten excessively dry soil that is not workable and which is too dusty.

B. Proceed with installation only after unsatisfactory conditions have been corrected.

C. If contamination by foreign or deleterious material or liquid is present in soil within a planting area, remove the soil and contamination as directed by Landscape Architect and replace with new planting soil.

3.2 PREPARATION

A. Protect structures, utilities, sidewalks, pavements, and other facilities and turf areas and existing plants from damage caused by planting operations.

B. Install erosion-control measures to prevent erosion or displacement of soils and discharge of soil-bearing water runoff or airborne dust to adjacent properties and walkways.

C. Lay out individual tree and shrub locations and areas for multiple plantings. Stake locations, outline areas, adjust locations when requested, and obtain Landscape Architect's acceptance of layout before excavating or planting. Make minor adjustments as required.

D. Lay out plants at locations directed by Landscape Architect. Stake locations of individual trees and shrubs and outline areas for multiple plantings.

E. Apply antidesiccant to trees and shrubs using power spray to provide an adequate film over trunks (before wrapping), branches, stems, twigs, and foliage to protect during digging, handling, and transportation.
    1. If deciduous trees or shrubs are moved in full leaf, spray with antidesiccant at nursery before moving and again two weeks after planting.

F. Wrap trees and shrubs with burlap fabric over trunks, branches, stems, twigs, and foliage to protect from wind and other damage during digging, handling, and transportation.

3.3 PLANTING AREA ESTABLISHMENT

A. Loosen subgrade of planting areas to a minimum depth of 6 inches. Remove stones larger than 1 inch in any dimension and sticks, roots, rubbish, and other extraneous matter and legally dispose of them off Owner's property.
    1. Apply fertilizer per soil testing specifications directly to subgrade before loosening.
    2. Spread topsoil, apply soil amendments and fertilizer on surface, and thoroughly blend planting soil.
        a. Delay mixing fertilizer with planting soil if planting will not proceed within a few days.
        b. Mix lime with dry soil before mixing fertilizer.
    3. Spread planting soil to a depth of 24 (6 but not less than required to meet finish grades after natural settlement. Do not spread if planting soil or subgrade is frozen, muddy, or excessively wet.
        a. Spread approximately one-half the thickness of planting soil over loosened subgrade. Mix thoroughly into top 4 inches of subgrade. Spread remainder of planting soil.

B. Finish Grading: Grade planting areas to a smooth, uniform surface plane with loose, uniformly fine texture. Roll and rake, remove ridges, and fill depressions to meet finish grades.

C. Before planting, obtain Landscape Architect's acceptance of finish grading; restore planting areas if eroded or otherwise disturbed after finish grading.

D. Application of Mycorrhizal Fungi: At time directed by Landscape Architect, broadcast dry product uniformly over prepared soil at specified.

3.4 EXCAVATION FOR TREES AND SHRUBS

A. Planting Pits and Trenches: Excavate circular planting pits with sides sloping inward at a 45-degree angle. Excavations with vertical sides are not acceptable. Trim perimeter of bottom leaving center area of bottom raised slightly to support root ball and assist in drainage away from center. Do not further disturb base. Ensure that root ball will sit on undisturbed base soil to prevent settling. Scarify sides of planting pit smeared or smoothed during excavation.
   1. Excavate approximately three times as wide as ball diameter of the plant stock.
   2. Excavate at least 12 inches wider than root spread and deep enough to accommodate vertical roots for bare-root stock.
   3. Do not excavate deeper than depth of the root ball, measured from the root flare to the bottom of the root ball.
   4. If area under the plant was initially dug too deep, add soil to raise it to the correct level and thoroughly tamp the added soil to prevent settling.
   5. Maintain required angles of repose of adjacent materials as shown on the Drawings. Do not excavate subgrades of adjacent paving, structures, hardscapes, or other new or existing improvements.
   6. Maintain supervision of excavations during working hours.
   7. Keep excavations covered or otherwise protected when unattended by Installer's personnel.
   8. If drain tile is shown on Drawings or required under planting areas, excavate to top of porous backfill over tile.

B. Subsoil and topsoil removed from excavations may be used as planting soil.

C. Obstructions: Notify Landscape Architect if unexpected rock or obstructions detrimental to trees or shrubs are encountered in excavations.
   1. Hardpan Layer: Drill 6-inch- diameter holes, 24 inches apart, into free-draining strata or to a depth of 10 feet, whichever is less, and backfill with free-draining material.

D. Drainage: Notify Landscape architect if subsoil conditions evidence unexpected water seepage or retention in tree or shrub planting pits.

E. Fill excavations with water and allow to percolate away before positioning trees and shrubs.

3.5 TREE, SHRUB, AND VINE PLANTING

A. Before planting, verify that root flare is visible at top of root ball according to ANSI Z60.1. If root flare is not visible, remove soil in a level manner from the root ball to where the top-most root emerges from the trunk. After soil removal to expose the root flare, verify that root ball still meets size requirements.

B. Remove stem girdling roots and kinked roots. Remove injured roots by cutting cleanly; do not break.

C. Set plant stock plumb and in center of planting pit or trench with root flare as specified above adjacent finish grades.
   1. Use planting soil for backfill.
   2. After placing some backfill around root ball to stabilize plant, carefully cut and remove burlap, rope, and wire baskets from tops of root balls and from sides, but do not remove from under root balls. Remove pallets, if any, before setting. Do not use planting stock if root ball is cracked or broken before or during planting operation.
   3. Backfill around root ball in layers, tamping to settle soil and eliminate voids and air pockets. When planting pit is approximately one-half filled, water thoroughly before placing remainder of backfill. Repeat watering until no more water is absorbed.
   4. Place planting tablets in each planting pit when pit is approximately one-half filled; in amounts recommended in soil reports from soil-testing laboratory. Place tablets beside the root ball about 1 inch from root tips; do not place tablets in bottom of the hole.
   5. Continue backfilling process. Water again after placing and tamping final layer of soil.

D. Set balled and potted container-grown stock plumb and in center of planting pit or trench with root flare flush to 2 inchesabove adjacent finish grades.
   1. Use planting soil for backfill.
   2. Carefully remove root ball from container without damaging root ball or plant.
   3. Backfill around root ball in layers, tamping to settle soil and eliminate voids and air pockets. When planting pit is approximately one-half filled, water thoroughly before placing remainder of backfill. Repeat watering until no more water is absorbed.

4. Place planting tablets in each planting pit when pit is approximately one-half filled; in amounts recommended in soil reports from soil-testing laboratory. Place tablets beside the root ball about 1 inch from root tips; do not place tablets in bottom of the hole.
5. Continue backfilling process. Water again after placing and tamping final layer of soil.

E. When planting on slopes, set the plant so the root flare on the uphill side is flush with the surrounding soil on the slope; the edge of the root ball on the downhill side will be above the surrounding soil. Apply enough soil to cover the downhill side of the root ball.

3.6 TREE, SHRUB, AND VINE PRUNING

A. Remove only dead, dying, or broken branches. Do not prune for shape.

B. Prune, thin, and shape trees, shrubs, and vines as directed by Landscape architect.

C. Prune, thin, and shape trees, shrubs, and vines according to standard professional horticultural and arboricultural practices. Unless otherwise indicated by Landscape architect, do not cut tree leaders; remove only injured, dying, or dead branches from trees and shrubs; and prune to retain natural character.

D. Do not apply pruning paint to wounds.

3.7 TREE STABILIZATION

A. Install trunk stabilization as follows unless otherwise indicated:
1. Upright Staking and Tying: Stake trees of 2- through 5-inch caliper. Stake trees of less than 2-inch caliper only as required to prevent wind tip out. Use a minimum of two stakes of length required to penetrate at least 18 inches below bottom of backfilled excavation and to extend as specified above grade. Set vertical stakes and space to avoid penetrating root balls or root masses.
2. Use two stakes for trees up to 12 feet high and 2-1/2 inches or less in caliper; three stakes for trees less than 14 feet high and up to 4 inches in caliper. Space stakes equally around trees.
3. Support trees with bands of flexible ties at contact points with tree trunk. Allow enough slack to avoid rigid restraint of tree.
4. Support trees with two strands of tie wire, connected to the brass grommets of tree-tie webbing at contact points with tree trunk. Allow enough slack to avoid rigid restraint of tree.

B. Staking and Guying: Stake and guy trees more than 14 feet in height and more than 3 inches in caliper unless otherwise indicated. Securely attach no fewer than three guys to stakes 30 inches long, driven to grade.
   1. Site-Fabricated Staking-and-Guying Method:
      a. For trees more than 6 inches in caliper, anchor guys to wood deadmen buried at least 36 inches below grade. Provide turnbuckle for each guy wire and tighten securely.
      b. Support trees with bands of flexible ties at contact points with tree trunk and reaching to turnbuckle. Allow enough slack to avoid rigid restraint of tree.
      c. Support trees with strands of cable or multiple strands of tie wire, connected to the brass grommets of tree-tie webbing at contact points with tree trunk and reaching to turnbuckle. Allow enough slack to avoid rigid restraint of tree.
      d. Attach flags to each guy wire, 30 inches above finish grade.
      e. Paint turnbuckles with luminescent white paint.
   2. Proprietary Staking and Guying Device: Install staking and guying system sized and positioned as recommended by manufacturer unless otherwise indicated and according to manufacturer's written instructions.

C. Root-Ball Stabilization: Install at- or below-grade stabilization system to secure each new planting by the root ball unless otherwise indicated.
   1. Wood Hold-Down Method: Place vertical stakes against side of root ball and drive them into subsoil; place horizontal wood hold-down stake across top of root ball and screw at each end to one of the vertical stakes.
      a. Install stakes of length required to penetrate at least to the dimension shown on Drawings below bottom of backfilled excavation. Saw stakes off at horizontal stake.
      b. Install screws through horizontal hold-down and penetrating at least 1 inch into stakes. Predrill holes if necessary to prevent splitting wood.
      c. Install second set of stakes on other side of root trunk for larger trees as indicated.
   2. Proprietary Root-Ball Stabilization Device: Install root-ball stabilization system sized and positioned as recommended by manufacturer unless otherwise indicated and according to manufacturer's written instructions.

3.8 GROUND COVER AND PLANT PLANTING

A. Set out and space ground cover and plants other than trees, shrubs, and vines as indicated in even rows with triangular spacing.

B. Use planting soil for backfill.

C. Dig holes large enough to allow spreading of roots.

D. For rooted cutting plants supplied in flats, plant each in a manner that will minimally disturb the root system but to a depth not less than two nodes.

E. Work soil around roots to eliminate air pockets and leave a slight saucer indentation around plants to hold water.

F. Water thoroughly after planting, taking care not to cover plant crowns with wet soil.

G. Protect plants from hot sun and wind; remove protection if plants show evidence of recovery from transplanting shock.

3.9 PLANTING AREA MULCHING

A. Install weed-control barriers before mulching according to manufacturer's written instructions. Completely cover area to be mulched, overlapping edges a minimum of 12 inches and secure seams with galvanized pins.

B. Mulch backfilled surfaces of planting areas and other areas indicated.
   1. Trees and Tree-like Shrubs in Turf Areas: Apply organic mulch ring of 4-inch average thickness, with 24-inch radius around trunks or stems. Do not place mulch within 3 inches of trunks or stems.

3.10 EDGING INSTALLATION

A. Shovel-Cut Edging: Separate mulched areas from turf areas with a 45-degree, 4- to 6-inch-deep, shovel-cut edge.

3.11 PLANT MAINTENANCE

A. Maintain plantings by pruning, cultivating, watering, weeding, fertilizing, mulching, restoring planting saucers, adjusting and repairing tree-stabilization devices, resetting to proper grades or vertical position, and performing other operations as required to establish healthy, viable plantings. Spray or treat as required to keep trees and shrubs free of insects and disease.

B. Fill in as necessary soil subsidence that may occur because of settling or other processes. Replace mulch materials damaged or lost in areas of subsidence.

C. Apply treatments as required to keep plant materials, planted areas, and soils free of pests and pathogens or disease. Use integrated past management practices whenever possible to minimize the use of pesticides and reduce hazards. Treatments include physical controls such as hosing off foliage, mechanical controls such as traps, and biological control agents.

3.12 PESTICIDE APPLICATION

A. Apply pesticides and other chemical products and biological control agents in accordance with authorities having jurisdiction and manufacturer's written recommendations. Coordinate applications with Owner's operations and others in proximity to the Work. Notify Owner before each application is performed.

B. Pre-Emergent Herbicides (Selective and Non-Selective): Apply to tree, shrub, and ground-cover areas in accordance with manufacturer's written recommendations. Do not apply to seeded areas.

C. Post-Emergent Herbicides (Selective and Non-Selective): Apply only as necessary to treat already-germinated weeds and in accordance with manufacturer's written recommendations.

3.13 CLEANUP AND PROTECTION

A. During planting, keep adjacent paving and construction clean and work area in an orderly condition.

B. Protect plants from damage due to landscape operations and operations of other contractors and trades. Maintain protection during installation and maintenance periods. Treat, repair, or replace damaged plantings.

C. After installation and before Substantial Completion, remove nursery tags, nursery stakes, tie tape, labels, wire, burlap, and other debris from plant material, planting areas, and Project site.

3.14 DISPOSAL

A. Remove surplus soil and waste material including excess subsoil, unsuitable soil, trash, and debris and legally dispose of them off Owner's property.

END OF SECTION 329300

SECTION 331100 - WATER UTILITY DISTRIBUTION PIPING

PART 1 - GENERAL

1.1 RELATED DOCUMENTS

A. Drawings and general provisions of the Contract, including General and Supplementary Conditions and Division 01 Specification Sections, apply to this Section.

1.2 SUMMARY

A. This Section includes water-distribution piping and specialties outside the building for the following:
   1. Water services.
   2. Fire-service mains.
   3. Fire-Hydrants
   4. Backflow preventers and assemblies

B. Utility-furnished products include water meters that will be furnished to the site, ready for installation.

1.3 DEFINITIONS

A. Combined Water Service and Fire-Service Main: Exterior water piping for both domestic-water and fire-suppression piping.

B. Fire-Service Main: Exterior fire-suppression-water piping.

C. Fire-Suppression-Water Piping: Interior fire-suppression-water piping.

D. Water-Distribution Piping: Interior domestic-water piping.

E. Water Service: Exterior domestic-water piping.

F. The following are industry abbreviations for plastic materials:
   1. PVC: Polyvinyl chloride plastic.

1.4 SUBMITTALS

A. Product Data: For the following:
   1. Piping specialties.
   2. Valves and accessories.
   3. Fire Hydrant assemblies.
   4. Backflow preventers and assemblies

B. Field Quality-Control Test Reports: From Contractor.

C. Operation and Maintenance Data: For specialties to include in emergency, operation, and maintenance manuals. In addition to items specified in Division 01 Section "Closeout Procedures," include the following: Delete water meters below if provided by utility company.
   1. Valves.
   2. Fire Hydrants
   3. Backflow Preventers and assemblies

1.5 QUALITY ASSURANCE

A. Product Options: Drawings indicate size, profiles, and dimensional requirements of piping and specialties and are based on the specific system indicated. Refer to Division 01 Section "Product Requirements."

B. Regulatory Requirements:
   1. Comply with requirements of utility company supplying water. Include tapping of water mains and backflow prevention.
   2. Comply with standards of authorities having jurisdiction for potable-water-service piping, including materials, installation, testing, and disinfection.
   3. Comply with standards of authorities having jurisdiction for fire-suppression water-service piping, including materials, hose threads, installation, and testing.

C. Piping materials shall bear label, stamp, or other markings of specified testing agency.

D. Electrical Components, Devices, and Accessories: Listed and labeled as defined in NFPA 70, Article 100, by a testing agency acceptable to authorities having jurisdiction, and marked for intended use.

E. Comply with ASTM F 645 for selection, design, and installation of thermoplastic water piping.

F. Comply with FM's "Approval Guide" or UL's "Fire Protection Equipment Directory" for fire-service-main products.

G. NFPA Compliance: Comply with NFPA 24 for materials, installations, tests, flushing, and valve and hydrant supervision for fire-service-main piping for fire suppression.

H. NSF Compliance:
   1. Comply with NSF 14 for plastic potable-water-service piping
   2. Comply with NSF 61 for materials for water-service piping and specialties for domestic water.

1.6 DELIVERY, STORAGE, AND HANDLING

A. Preparation for Transport: Prepare valves, including fire hydrants, according to the following:
   1. Ensure that valves are dry and internally protected against rust and corrosion.
   2. Protect valves against damage to threaded ends and flange faces.
   3. Set valves in best position for handling. Set valves closed to prevent rattling.

B. During Storage: Use precautions for valves, including fire hydrants, according to the following:
   1. Do not remove end protectors unless necessary for inspection; then reinstall for storage.
   2. Protect from weather. Store indoors and maintain temperature higher than ambient dew-point temperature. Support off the ground or pavement in watertight enclosures when outdoor storage is necessary.

C. Handling: Use sling to handle valves and fire hydrants if size requires handling by crane or lift. Rig valves to avoid damage to exposed parts. Do not use handwheels or stems as lifting or rigging points.

D. Deliver piping with factory-applied end caps. Maintain end caps through shipping, storage, and handling to prevent pipe-end damage and to prevent entrance of dirt, debris, and moisture.

E. Protect stored piping from moisture and dirt. Elevate above grade. Do not exceed structural capacity of floor when storing inside.

F. Protect flanges, fittings, and specialties from moisture and dirt.

G. Store plastic piping protected from direct sunlight. Support to prevent sagging and bending.

1.7 PROJECT CONDITIONS

A. Existing Utilities: Do not interrupt utilities serving facilities occupied by Owner or others unless permitted under the following conditions and then only after arranging to provide temporary utility services according to requirements indicated:
   1. Notify Architect not less than two days in advance of proposed utility interruptions.
   2. Do not proceed with utility interruptions without Architect's written permission.

1.8 COORDINATION

A. Coordinate connection to water main with utility company.

PART 2 - PRODUCTS

2.1 MANUFACTURERS

A. In other Part 2 articles where subparagraph titles below introduce lists, the following requirements apply for product selection:
   1. Available Products: Subject to compliance with requirements, products that may be incorporated into the Work include, but are not limited to, the products specified.
   2. Products: Subject to compliance with requirements, provide one of the products specified.
   3. Available Manufacturers: Subject to compliance with requirements, manufacturers offering products that may be incorporated into the Work include, but are not limited to, the manufacturers specified.
   4. Manufacturers: Subject to compliance with requirements, provide products by the manufacturers specified.

2.2 PIPING MATERIALS

A. Refer to Part 3 "Piping Applications" Article for applications of pipe, tube, fitting, and joining materials.

2.3 DUCTILE-IRON PIPE AND FITTINGS
   1. Section not used

2.4 COPPER TUBE AND FITTINGS
   1. Section not used

2.5 PE PIPE AND FITTINGS
   1. Section not used

2.6 PEX TUBE AND FITTINGS
   1. Section not used

2.7 PVC PIPE AND FITTINGS

A. PVC, AWWA Pipe: AWWA C900, Class 200, with bell end with gasket and spigot end.
   1. Comply with UL 1285 for fire-service mains if indicated.

2. Mechanical-Joint, Ductile-Iron Fittings: AWWA C110, ductile- or gray-iron standard pattern or AWWA C153, ductile-iron compact pattern.
   a. Glands, Gaskets, and Bolts: AWWA C111, ductile- or gray-iron glands, rubber gaskets, and steel bolts.

2.8 JOINING MATERIALS

A. Refer to Division 33 Section "Utility Materials" for commonly used joining materials.

B. Transition Couplings:
   1. Underground Piping, NPS 2 (DN 50) and Larger: AWWA C219, metal, sleeve-type coupling same size as, with pressure rating at least equal to and ends compatible with, piping to be joined.

C. Plastic Pipe-Flange Gasket, Bolts, and Nuts: Type and material recommended by piping system manufacturer, unless otherwise indicated.

2.9 PIPING SPECIALTIES

1. Section not used

2.10 CORROSION-PROTECTION ENCASEMENT FOR PIPING

A. Encasement for Underground Metal Piping: ASTM A 674 or AWWA C105, PE film, 0.008-inch (0.20-mm) minimum thickness, tube or sheet.

2.11 GATE VALVES

A. Acceptable Manufacturers
   1. Mueller
   2. Clow

B. All gate values shall conform to AWWA C509

C. All gate valves shall be resilient seated type.

D. All gate valves shall be non-rising stem type with triple "O" - Ring seals. The top two "O"-Rings shall be field replaceable without removing the valve from service.

2.12 WATER METERS

A. Water meters will be furnished by utility company.

2.13 WATER-METER BOXES

A. Contractor shall coordinate with utility company.
   1.

2.14 HOSE-CONNECTION, BACKFLOW-PREVENTION DEVICES

A. Section not used

2.15 BACKFLOW PREVENTERS

A. Available Manufacturers:
   1. Watts Industries, Inc.; Water Products Div. (8" - 709DCDA Double Check Detector Assembly)
   2. Or approved equal

2.16 CONCRETE VAULTS

A. Description: Precast, reinforced-concrete vault, designed for A-16 load designation according to ASTM C 857 and made according to ASTM C 858.

B. Manhole: ASTM A 48, Class No. 35 (ASTM A 48M, Class No. 250) minimum tensile strength, gray-iron traffic frame and cover.
   1. Dimensions: Not smaller than 24-inch (610-mm) diameter, unless otherwise indicated.

C. Manhole: ASTM A 536, Grade 60-40-18, ductile-iron, 24-inch- (610-mm-) minimum-diameter traffic frame and cover.

2.17 PROTECTIVE ENCLOSURES

A. Valve Boxes
   1. Acceptable Manufacturers:
      a. Clow Corporation
      b. Mueller Company
   2. Provide for all buried valves.
   3. Design:
      a. Boxes shall be three-piece cast-iron slide type with 5-1/4-inch shaft.
      b. Provide extension stem to bring operating nut within 3 feet of valve box top.
      c. Drop cover shall be marked "WATER".

2.18 FREESTANDING FIRE HYDRANTS

A. Acceptable Model/Manufacturer:
   1. As indicated on the plans

B. Fire hydrants shall conform to AWWA C502 for dry-barrel fire hydrants.

C. Fire hydrant shall have a nominal 5-1/4 inch main valve with 6-inch mechanical joint inlet shoe connection.

D. Outlet nozzles shall be National (American) fire hose coupling screw threads and be as follows:
   1. Two - 2-1/2 inch hose nozzles
   2. One - 4-1/2 inch pumper nozzle.

E. Main valve shall be equipped with "O"-ring seals and shall open to the left (counterclockwise).

F. Fire hydrant shall be of the break-flange safety-top type.

G. Fire Hydrants shall be prime coated from the ground line up shall conform to Federal Spec TT-P-636 only. Federal Spec TT-P-86 is not acceptable. Coatings which contain more than 0.06% by weight of lead shall not be used. The hydrants shall be given a second coat of paint, from the ground line up paint shall be red in color for the barrel, the bonnett and caps will be painted according to the following table. The paint shall be equivalent to Sherwin Williams industrial enamel B54 series.

Hydrant	Flow of Hydrant in GPM	Color of Bonnet & Caps

Class		Sherwin Williams Industrial Enamel B54 Series
AA	1500 or Greater	Light Blue (Sherwin Williams Laser Blue SW4079)
A	1000-1499	Green (Sherwin Williams Safety Green SW4085)
B	500-999	Orange (Sherwin Williams Safety Orange SW4083)
C	Less than 500	Red (Sherwin Williams Safety Red SW4081)

PART 3 - EXECUTION

3.1 EARTHWORK

A. Refer to Division 31 Section "Earth Moving" for excavating, trenching, and backfilling.

3.2 PIPING APPLICATIONS

A. General: Use pipe, fittings, and joining methods for piping systems according to the following applications.

B. Transition couplings and special fittings with pressure ratings at least equal to piping pressure rating may be used in applications below, unless otherwise indicated.

C. Do not use flanges, unions, or keyed couplings for underground piping.

D. Flanges, unions, keyed couplings, and special fittings may be used, instead of joints indicated, on aboveground piping and piping in vaults.

E. Underground Water-Service Piping: Use any of the following piping materials for each size range:
1. NPS ¾ to NPS 3: PVC, Schedule 80 socket fittings; and solvent-cemented joints.
2. NPS 4 to NPS 8 (DN 100 to DN 200): PVC C900 pipe; push on gasketed joints, ductile-iron fittings

F. Underground Fire-Service-Main Piping: Use the following:
1. NPS 4 to NPS 8 (DN 100 to DN 200): PVC C900 pipe listed for fire-protection service; push on gasketed joints, ductile-iron fittings

G. Underground Combined Water-Service and Fire-Service-Main Piping: Use the following:
1. Section not used

3.3 VALVE APPLICATIONS

A. As specified in Section 2.11

3.4 JOINT CONSTRUCTION

A. Joints:
1. Push-On:
   a. All pipe shall be provided with push-on joints conforming to ANSI A21.51/AWWA C111, except gaskets shall be synthetic rubber. Natural rubber will not be acceptable. The pipe shall be cement mortar lined, conforming to ANSI A2104/AWWA C104 and shall be coated inside and out with a bituminous coating.
2. Restrained:
   a. Provide restrained joint pipe where required.
   b. Provide restrained joints of following approved types:

c. (1) Restrained mechanical joint
d. (2) Restrained push-on joint.
e. (3) Boltless or bolted ball and socket joint.
f. (4) Anchored couplings.
g. Provide retainer glands where required.

3.

3.5 PIPING SYSTEMS - COMMON REQUIREMENTS

A. See Division 33 Section "Utility Materials" for piping-system common requirements.

3.6 PIPING INSTALLATION

A. Water-Main Connection: Arrange with utility company for tap of size and in location indicated in water main.

B. Comply with NFPA 24 for fire-service-main piping materials and installation.
1. Install PE corrosion-protection encasement according to ASTM A 674 or AWWA C105.

C. Install PVC, AWWA pipe according to AWWA M23 and ASTM F 645.

D. Bury piping with depth of cover over top at least 42".

E. Install piping by tunneling, jacking, or combination of both, under streets and other obstructions that cannot be disturbed.

F. Install underground piping with restrained joints at horizontal and vertical changes in direction. Use restrained-joint piping, thrust blocks, anchors, tie-rods and clamps, and other supports.

G. Anchor service-entry piping to building wall.

H. See Division 22 for potable-water piping inside the building.

I. See Division 22 for fire-suppression water piping inside the building.

3.7 ANCHORAGE INSTALLATION

A. Section not used

3.8 VALVE INSTALLATION

A. AWWA Gate Valves: Comply with AWWA C600 and AWWA M44. Install each underground valve with stem pointing up and with valve box.

3.9 WATER-METER INSTALLATION

A. Install water meters, piping, and specialties according to utility company's written requirements.

3.10 ROUGHING-IN FOR WATER METERS

A. Rough-in piping and specialties for water-meter installation according to utility company's written instructions and requirements.

3.11 PROTECTIVE ENCLOSURE INSTALLATION

A. Install protective enclosure over valves and equipment.

B. Anchor protective enclosure to concrete base.

3.12 FIRE HYDRANT INSTALLATION

A. General: Install each fire hydrant with separate gate valve in supply pipe, anchor with restrained joints or thrust blocks, and support in upright position.

B. AWWA-Type Fire Hydrants: Comply with AWWA M17.

3.13 CONNECTIONS

A. Piping installation requirements are specified in other Division 33 Sections. Drawings indicate general arrangement of piping and specialties.

B. See Division 33 Section "Utility Materials" for piping connections to valves and equipment.

C. Connect water-distribution piping to existing utility water main. Connection to be coordinated with utility.

D. Connect water-distribution piping to interior domestic-water and fire-suppression piping.

3.14 FIELD QUALITY CONTROL

A. Piping Tests: Conduct piping tests before joints are covered and after thrust blocks have hardened sufficiently. Fill pipeline 24 hours before testing and apply test pressure to stabilize system. Use only potable water.

B. Hydrostatic Tests: Test at not less than 1-1/2 times working pressure for 2 hours.
   1. Increase pressure in 50-psig (350-kPa) increments and inspect each joint between increments. Hold at test pressure for 1 hour; decrease to 0 psig (0 kPa). Slowly increase again to test pressure and hold for 1 more hour. Maximum allowable leakage is 2 quarts (1.89 L) per hour per 100 joints. Remake leaking joints with new materials and repeat test until leakage is within allowed limits.

C. Prepare reports of testing activities.

3.15 IDENTIFICATION

A. Install continuous underground detectable warning tape during backfilling of trench for underground water-service piping. Locate below finished grade, directly over piping. See Division 31 Section "Earth Moving" for underground warning tapes.

B. Permanently attach equipment nameplate or marker, indicating plastic water-service piping, on main electrical meter panel. See Division 33 Section "Utility Materials" for identifying devices.

3.16 ADJUSTING

1. Section not used

3.17 CLEANING

A. Clean and disinfect water-distribution piping as follows:
   1. Purge new water-distribution piping systems and parts of existing systems that have been altered, extended, or repaired before use.
   2. Use purging and disinfecting procedure prescribed by authorities having jurisdiction or, if method is not prescribed by authorities having jurisdiction, use procedure described in NFPA 24 for flushing of piping. Flush piping system with clean, potable water until dirty water does not appear at points of outlet.
   3. Use purging and disinfecting procedure prescribed by authorities having jurisdiction or, if method is not prescribed by authorities having jurisdiction, use procedure described in AWWA C651 or as described below:
      a. Fill system or part of system with water/chlorine solution containing at least 50 ppm of chlorine; isolate and allow to stand for 24 hours.
      b. Drain system or part of system of previous solution and refill with water/chlorine solution containing at least 200 ppm of chlorine; isolate and allow to stand for 3 hours.
      c. After standing time, flush system with clean, potable water until no chlorine remains in water coming from system.
      d. Submit water samples in sterile bottles to authorities having jurisdiction. Repeat procedure if biological examination shows evidence of contamination.

B. Prepare reports of purging and disinfecting activities.

C. After completing drinking fountain installation, inspect unit. Remove paint splatters and other spots, dirt, and debris. Repair damaged finish to match original finish.

D. Clean drinking fountains, on completion of installation, according to manufacturer's written instructions.

END OF SECTION 331100

SECTION 334100 – STORM UTILITY DRAINAGE PIPING

PART 1 - **GENERAL**

1.1 RELATED DOCUMENTS

A. Drawings and general provisions of the Contract, including General and Supplementary Conditions and Division 01 Specification Sections, apply to this Section.

1.2 SUMMARY

A. This Section includes gravity-flow, nonpressure storm and sanitary drainage outside the building, with the following components:

1. Cleanouts.
2. No pressure drainage piping
3. Concrete manholes junction boxes and inlets.

1.3 DEFINITIONS

A. HDPE: High Density Polyethylene plastic.

B. HP: Polypropylene

C. PVC: Polyvinyl chloride plastic.

D. RCP: Reinforced concrete pipe

1.4 PERFORMANCE REQUIREMENTS

A. Gravity-Flow, Nonpressure, Drainage-Piping Pressure Rating: [10-foot head of water (30 kPa)] Pipe joints shall be at least silttight, unless otherwise indicated.

1.5 SUBMITTALS

A. Product Data: For the following:

1. Special pipe fittings.
2. Drains.

B. Shop Drawings: For the following:

1. Manholes and Junction Boxes: Include plans, elevations, sections, details, and frames and covers. Include design calculations, and concrete design-mix report for cast-in-place manholes.
2. Catch Basins and Stormwater Inlets: Include plans, elevations, sections, details, and frames, covers, and grates.
3. Stormwater Detention Structures: Include plans, elevations, sections, details, frames and covers, design calculations, and concrete design-mix report.

C. Field quality-control test reports.

1.6 DELIVERY, STORAGE, AND HANDLING

A. Do not store plastic pipe, and fittings in direct sunlight.

B. Protect pipe, pipe fittings, and seals from dirt and damage.

C. Handle manholes according to manufacturer's written rigging instructions.

D. Handle catch basins and stormwater inlets according to manufacturer's written rigging instructions.

1.7 PROJECT CONDITIONS

A. Interruption of Existing Storm Drainage Service: Do not interrupt service to facilities occupied by Owner or others unless permitted under the following conditions and then only after arranging to provide temporary service according to requirements indicated:

1. Notify Architect no fewer than two days in advance of proposed interruption of service.
2. Do not proceed with interruption of service without Architect's written permission.

PART 2 - PRODUCTS

2.1 MANUFACTURERS

A. In other Part 2 articles where titles below introduce lists, the following requirements apply to product selection:

1. Available Manufacturers: Subject to compliance with requirements, manufacturers offering products that may be incorporated into the Work include, but are not limited to, manufacturers specified.
2. Manufacturers: Subject to compliance with requirements, provide products by one of the manufacturers specified.

2.2 PIPING MATERIALS

A. Refer to Part 3 "Piping Applications" Article for applications of pipe, fitting, and joining materials.

2.3 DUCTILE-IRON CULVERT PIPE AND FITTINGS

A. Section not used

2.4 DUCTILE-IRON PRESSURE PIPE AND FITTINGS

A. Section not used

2.5 STEEL PIPE AND FITTINGS

A. Section not used

2.6 ALUMINUM PIPE AND FITTINGS

A. Section not used

2.7 ABS PIPE AND FITTINGS

A. Section not used

2.8 HDPE PIPE AND FITTINGS

A. Corrugated HDPE Drainage Pipe and Fittings 4” through 60” (100 mm to 1500mm) AASHTO M 252M, with smooth waterway.

1. Corrugated HDPE Pipe and Fittings NPS 8 to NPS 48: AASHTO M 294, with smooth waterway for coupling joints.
2. Watertight Soiltight Couplings: AASHTO M 294, corrugated, matching pipe and fittings. Gaskets shall meet ASTM F477 and watertight according to ASTM D3212.

2.9 HP PIPE AND FITTINGS

A. HP Drainage Pipe and Fittings 12” through 30” (100 mm to 1500mm) AASHTO M 252M, with smooth waterway meeting or exceeding ASTM F2736 & AASHTO M330.

2.10 PVC PIPE AND FITTINGS

A. PVC Sewer Pipe and Fittings, NPS 15 (DN 375) and Smaller: ASTM D 3034, SDR 35, with bell-and-spigot ends for gasketed joints with ASTM F 477, elastomeric seals.

2.11 CONCRETE PIPE AND FITTINGS

A. Reinforced-Concrete Sewer Pipe and Fittings: ASTM C 76 (ASTM C 76M), with groove and tongue ends and sealant joints with ASTM C 990 (ASTM C 990M).

1. Class III, Wall - unless otherwise stated on the drawings.

2.12 NONPRESSURE-TYPE PIPE COUPLINGS

A. Section not used

2.13 SPECIAL PIPE FITTINGS

A. Section not used

2.14 BACKWATER VALVES

A. Section not used

2.15 CLEANOUTS

A. PVC Cleanouts: PVC body with PVC threaded plug. Include PVC sewer pipe fitting and riser to cleanout of same material as sewer piping.

1. Available Manufacturers:

a. Canplas Inc.
b. IPS Corporation.
c. NDS Inc.
d. Plastic Oddities, Inc.
e. Sioux Chief Manufacturing Company, Inc.
f. Zurn Industries, Inc.; Zurn Light Commercial Specialty Plumbing Products.

B. HDPE Cleanout: As specified on the plans

2.16 DRAINS

A. Section not used

2.17 CORROSION-PROTECTION PIPING ENCASEMENT

A. Section not used

2.18 MANHOLES

a. As specified on the plans

2.19 CONCRETE

A. General: Cast-in-place concrete according to ACI 318/318R, ACI 350R, and the following:

1. Cement: ASTM C 150, Type II.
2. Fine Aggregate: ASTM C 33, sand.
3. Coarse Aggregate: ASTM C 33, crushed gravel.

4. Water: Potable.

B. Portland Cement Design Mix: 4000 psi (27.6 MPa) minimum, with 0.45 maximum water-cementitious materials ratio.

1. Reinforcement Fabric: ASTM A 185, steel, welded wire fabric, plain.
2. Reinforcement Bars: ASTM A 615/A 615M, Grade 60 (420 MPa), deformed steel.

C. Ballast and Pipe Supports: Portland cement design mix, 3000 psi (20.7 MPa) minimum, with 0.58 maximum water-cementitious materials ratio.

1. Reinforcement Fabric: ASTM A 185, steel, welded wire fabric, plain.
2. Reinforcement Bars: ASTM A 615/A 615M, Grade 60 (420 MPa), deformed steel.

2.20 CATCH BASINS

A. As specified on the plan

2.21 STORMWATER INLETS

A. As specified on the plans

2.22 STORMWATER DETENTION STRUCTURES

A. As specified on the plans

2.23 PIPE OUTLETS

A. As specified on the plans

2.24 BELOW GROUND STORMWATER PIPE DETENTION SYSTEMS

A. Section not used

PART 3 - EXECUTION

3.1 EARTHWORK

A. Excavation, trenching, and backfilling are specified in Division 31 Section "Earth Moving."

3.2 PIPING APPLICATIONS

A. Pipe couplings and special pipe fittings with pressure ratings at least equal to piping rating may be used in applications below, unless otherwise indicated.

1. Use nonpressure-type flexible couplings where required to join gravity-flow, nonpressure sewer piping, unless otherwise indicated.

    a. Unshielded flexible or rigid couplings for same or minor difference OD pipes.
    b. Unshielded, increaser/reducer-pattern, flexible or rigid couplings for pipes with different OD.
    c. Ring-type flexible couplings for piping of different sizes where annular space between smaller piping's OD and larger piping's ID permits installation.

2. Use pressure-type pipe couplings for force-main joints.

B. Special Pipe Fittings: Use for pipe expansion and deflection. Pipe couplings and special pipe fittings with pressure ratings at least equal to piping rating may be used in applications below, unless otherwise indicated.

C. Gravity-Flow, Nonpressure Sewer Piping: Use any of the following pipe materials in the locations specified on the drawings for each size range:

1. NPS 4 and NPS 6 (DN 100 and DN 150): PVC sewer pipe and fittings, gaskets, and gasketed joints.
2. NPS 4 and NPS 6 (DN 100 and DN 150): Corrugated HDPE drainage pipe and fittings, soiltight couplings, and coupled joints.
3. NPS 8 and NPS 10 (DN 200 and DN 250) Corrugated HDPE pipe and fittings in soiltight couplings, and coupled joints.
4. NPS 12 to NPS 18: HP pipe and fittings

3.3 PIPING INSTALLATION

A. General Locations and Arrangements: Drawing plans and details indicate general location and arrangement of underground storm drainage piping. Location and arrangement of piping layout take design considerations into account. Install piping as indicated, to extent practical. Where specific installation is not indicated, follow piping manufacturer's written instructions.

B. Install piping beginning at low point, true to grades and alignment indicated with unbroken continuity of invert. Place bell ends of piping facing upstream. Install gaskets, seals, sleeves, and couplings according to manufacturer's written instructions for use of lubricants, cements, and other installation requirements.

C. Install manholes for changes in direction unless fittings are indicated. Use fittings for branch connections unless direct tap into existing sewer is indicated.

D. Install proper size increasers, reducers, and couplings where different sizes or materials of pipes and fittings are connected. Reducing size of piping in direction of flow is prohibited.

E. Tunneling: Install pipe under streets or other obstructions that cannot be disturbed by tunneling, jacking, or a combination of both.

F. Install gravity-flow, nonpressure drainage piping according to the following:

1. Install piping pitched down in direction of flow.

2. Install HDPE corrugated sewer piping according to CPPA's "Recommended Installation Practices for Corrugated Polyethylene Pipe and Fittings."
3. Install HP pipe according to ASTM D2321 and manufactures installation guidelines.
4. Install PVC sewer piping according to ASTM D 2321 and ASTM F 1668.
5. Install PVC profile gravity sewer piping according to ASTM D 2321 and ASTM F 1668.
6. Install reinforced-concrete sewer piping according to ASTM C 1479 and ACPA's "Concrete Pipe Installation Manual."

3.4 PIPE JOINT CONSTRUCTION

A. Basic pipe joint construction is specified in Division 33 Section "Common Work Results for Utilities." Where specific joint construction is not indicated, follow piping manufacturer's written instructions.

B. Join gravity-flow, nonpressure drainage piping according to the following:

1. Join corrugated HDPE piping according to CPPA 100 and the following:

   a. Use watertight couplings.

2. Join HP pipe with a gasket integral bell & spigot joint meeting the requirements of ASTM F2736 or F2881, for the respective diameters.

   12- through 60-inch (300 to 1500 mm) shall be watertight according to the requirements of ASTM D3212. Spigots shall have gaskets meeting the requirements of ASTM F477. Gasket shall be installed by the pipe manufacturer and covered with a removable, protective wrap to ensure the gasket is free from debris. A joint lubricant available from the manufacturer shall be used on the gasket and bell during assembly.

   12- through 60-inch (300 to 1500 mm) diameters shall have a reinforced bell with a polymer composite band installed by the manufacturer.
3. Join PVC sewer piping according to ASTM D 2321 and ASTM D 3034 for elastomeric-seal joints or ASTM D 3034 for elastomeric gasket joints.
4. Join PVC profile gravity sewer piping according to ASTM D 2321 for elastomeric-seal joints or ASTM F 794 for gasketed joints.
5. Join reinforced-concrete sewer piping according to ACPA's "Concrete Pipe Installation Manual" for rubber-gasket joints.
6. Join dissimilar pipe materials with nonpressure-type flexible couplings.

3.5 BACKWATER VALVE INSTALLATION

A. Section not used

3.6 CLEANOUT INSTALLATION

A. Install cleanouts and riser extension from sewer pipe to cleanout at grade at locations shown on the drawings. Use cast-iron soil pipe fittings in sewer pipes at branches for cleanouts and cast-iron soil pipe for riser extensions to cleanouts. Install piping so cleanouts open in direction of flow in sewer pipe.

1. Use heavy-duty, top-loading classification cleanouts in vehicle-traffic service areas other than street, roads and parking lots.
2. Use extra-heavy-duty, top-loading classification cleanouts in streets, roads, and parking lot areas.

B. Set cleanout frames and covers in cast-in-place concrete block, 18 by 18 by 12 inches (450 by 450 by 300 mm) deep. Set with tops 1 inch (25 mm) above surrounding earth grade.

C. Set cleanout frames and covers in concrete pavement with tops flush with pavement surface.

3.7 DRAIN INSTALLATION

A. Per manufactures specifications.

3.8 MANHOLE INSTALLATION

A. General: Install manholes, complete with appurtenances and accessories indicated.

B. Install precast concrete manhole sections according to ASTM C 891.

C. Construct cast-in-place manholes as indicated.

D. Install FRP manholes according to manufacturer's written instructions.

E. Set tops of frames and covers flush with finished surface of manholes that occur in pavements. Set tops 3 inches (76 mm) above finished surface elsewhere, unless otherwise indicated.

3.9 CATCH BASIN INSTALLATION

A. Construct catch basins to sizes and shapes indicated.

B. Set frames and grates to elevations indicated.

3.10 STORMWATER INLET[AND OUTLET] INSTALLATION

A. Construct inlet head walls, aprons, and sides of reinforced concrete, as indicated.

B. Construct riprap of broken stone, as indicated.

C. Install outlets that spill onto grade, anchored with concrete, where indicated.

D. Install outlets that spill onto grade, with flared end sections that match pipe, where indicated.

E. Construct energy dissipaters at outlets, as indicated.

3.11 CONCRETE PLACEMENT

A. Place cast-in-place concrete according to ACI 318/318R.

3.12 BELOW GROUND STORMWATER PIPE DENTENTION SYSTEM INSTALLATION

A. Section not used

3.13 CONNECTIONS

A. Connect nonpressure, gravity-flow drainage piping in building's storm building drains specified in Division 22 Section "Facility Storm Drainage Piping."

3.14 CLOSING ABANDONED STORM DRAINAGE SYSTEMS

A. Abandoned Piping: Close open ends of abandoned underground piping indicated to remain in place. Include closures strong enough to withstand hydrostatic and earth pressures that may result after ends of abandoned piping have been closed. Use either procedure below:

1. Close open ends of piping with at least 8-inch- (203-mm-) thick, brick masonry bulkheads.
2. Close open ends of piping with threaded metal caps, plastic plugs, or other acceptable methods suitable for size and type of material being closed. Do not use wood plugs.

B. Abandoned Manholes and Structures: Excavate around manholes and structures as required and use one procedure below:

1. Remove manhole or structure and close open ends of remaining piping.
2. Remove top of manhole or structure down to at least 36 inches (915 mm) below final grade. Fill to within 12 inches (300 mm) of top with stone, rubble, or gravel. Fill to top with concrete in paved areas or earth in non-paved areas.

C. Backfill to grade according to Division 31 Section "Earth Moving."

3.15 IDENTIFICATION

A. Materials and their installation are specified in Division 31 Section "Earth Moving." Arrange for installation of green warning tape directly over piping and at outside edge of underground structures.

1. Use detectable warning tape over non-metallic ferrous piping.
2. Use detectable warning tape over nonferrous piping and over edges of underground structures.

3.16 FIELD QUALITY CONTROL

A. Inspect interior of piping to determine whether line displacement or other damage has occurred. Inspect after approximately 24 inches (610 mm) of backfill is in place, and again at completion of Project.

1. Submit separate reports for each system inspection.
2. Defects requiring correction include the following:

a. Alignment: Less than full diameter of inside of pipe is visible between structures.

b. Deflection: Flexible piping with deflection that prevents passage of ball or cylinder of size not less than 92.5 percent of piping diameter.
c. Crushed, broken, cracked, or otherwise damaged piping.
d. Infiltration: Water leakage into piping.
e. Exfiltration: Water leakage from or around piping.

3. Replace defective piping using new materials, and repeat inspections until defects are within allowances specified.
4. Reinspect and repeat procedure until results are satisfactory.

B. Test new piping systems, and parts of existing systems that have been altered, extended, or repaired, for leaks and defects.

1. Do not enclose, cover, or put into service before inspection and approval.
2. Test completed piping systems according to authorities having jurisdiction.
3. Schedule tests and inspections by authorities having jurisdiction with at least 24 hours' advance notice.
4. Submit separate report for each test.
5. Gravity-Flow Storm Drainage Piping: Test according to requirements of authorities having jurisdiction, UNI-B-6, and the following:

a. Option: Test HDPE according to ASTM F2487.
b. Option: Test plastic piping according to ASTM F 1417.
c. Option: Test concrete piping according to ASTM C 924 (ASTM C 924M).

C. Replace leaking piping using new materials, and repeat testing until leakage is within allowances specified.

3.17 CLEANING

A. Clean interior of piping of dirt and superfluous materials.

END OF SECTION 334100

NIXA POLICE STATION

305 N LEEANN DR
NIXA, MO 65714

PROJECT DIRECTORY

OWNER
THE CITY OF NIXA
707 W CENTER CIRCLE
NIXA, MO 65714

CIVIL
OLSSON
550 ST LOUIS STREET
SPRINGFIELD, MO 65806
P: (417)890-8802
F: (417)890-8805

LANDSCAPE
OLSSON
550 ST LOUIS STREET
SPRINGFIELD, MO 65806
P: (417)890-8802
F: (417)890-8805

ARCHITECT OF RECORD
INSIGHT DESIGN ARCHITECTS
112 SOUTH MAIN STREET
PO BOX 1982
NIXA, MO 65714
P: (417)724-8553

DESIGN ARCHITECT
CHIODINI ASSOCIATES
1401 S. BRENTWOOD
SUITE 575
ST. LOUIS, MO. 63144
P: (314)725-5588
F: (314)733-9999

STRUCTURAL
METTEMEYER ENGINEERING
2225 W CHESTERFIELD BLVD
SUITE 300
SPRINGFIELD, MO 65807
P: (417)890-8002

MECHANICAL
CJD ENGINEERING
2225 W CHESTERFIELD BLVD
SUITE 200
SPRINGFIELD, MO 65807
P: (417)877-1700

PLUMBING
CJD ENGINEERING
2225 W CHESTERFIELD BLVD
SUITE 200
SPRINGFIELD, MO 65807
P: (417)877-1700

ELECTRICAL
CJD ENGINEERING
2225 W CHESTERFIELD BLVD
SUITE 200
SPRINGFIELD, MO 65807
P: (417)877-1700

FIRE PROTECTION
CJD ENGINEERING
2225 W CHESTERFIELD BLVD
SUITE 200
SPRINGFIELD, MO 65807
P: (417)877-1700

LOW VOLTAGE
PITT TECHNOLOGY GROUP
1900 N LE COMPTE AVE
SUITE 15
SPRINGFIELD, MO 65802
P: (417)831-7077
F: (417)831-4697

GEOTECHNICAL
GREDELL ENGINEERING RESOURCES
636 W REPUBLIC ROAD
SUITE D-100
SPRINGFIELD, MO 65807
P: (417)890-6200
F: (417)351-5550

PRIN'TED: 6/11/2025 11:32:47 AM

NIXA POLICE DEPARTMENT
305 N LEEANN DR
NIXA, MO 65714

INSIGHT DESIGN iDeA ARCHITECTS
112 S. Main St., Nixa, MO 65714 Ph: 417-724-8553

CJD Engineering | Energy | Innovation

olsson

METTEMEYER ENGINEERING LLC

Chiodini ARCHITECTS
Architecture / Interior Design / Graphics
1401 S. Brentwood Blvd. | Suite 575 | St. Louis, Missouri 63144
314-725-5588 | info@chiodini.com

Reissue Date

Professional of Record

STATE OF MISSOURI
NATHAN P. RAPP
NUMBER A-2001038771
ARCHITECT

DATE 2025-06-11

Copyright 2025 ©
These prints are the property of the architect and shall be usedonly for the project referenced above

Architect
LMH / NPR

Project #
24-003

Date
2025-06-11

Drawing Title:
COVER SHEET

Sheet:
G000

ABBREVIATIONS

ACT	ACOUSTICAL CEILING TILE
AD	AREA DRAIN
ADJ	ADJACENT
AFF	ABOVE FINISH FLOOR
AHU	AIR HANDLING UNIT
ALT	ALTERNATE
ALUM	ALUMINUM
ANOD	ANODIZED
ANSI	AMERICAN NATIONAL STANDARDS INSTITUTE
ARCH	ARCHITECT(URAL)
ASTM	AMERICAN SOCIETY FOR TESTING MATERIALS
BD	BOARD
BLDG	BUILDING
BO_	BOTTOM OF ___
BOT	BOTTOM
CF/CI	CONTRACTOR FURNISHED / CONTRACTOR INSTALLED
CF/OI	CONTRACTOR FURNISHED / OWNER INSTALLED
CG	CORNER GUARD
CIP	CAST-IN-PLACE
CJ	CONTROL JOINT
CL	CENTER LINE
CLR	CLEAR
CM	CENTIMETERS
CMU	CONCRETE MASONRY UNIT
CO	CLEANOUT
COL	COLUMN
CONC	CONCRETE
CONT	CONTINUOUS
COORD	COORDINATE
CPT	CARPET
CR	CARD READER
CU	CONDENSING UNIT
CUST	CUSTODIAN
DBL	DOUBLE
DEMO	DEMOLISH / DEMOLITION
DET	DETAIL
DIA	DIAMETER
DN	DOWN
DS	DOWNSPOUT
EA	EACH
EIFS	EXTERIOR INSULATION FINISH SYSTEM
EJ	EXPANSION JOINT
EL	ELEVATION
ELEC	ELECTRIC / ELECTRICAL
ELEV	ELEVATOR
EP	ELECTRIC PANEL
EQ	EQUAL
EQUIP	EQUIPMENT
EXIST	EXISTING
EXP	EXPOSED
EXT	EXTERIOR
FA	FIRE ALARM
FACP	FIRE ALARM CONTROL PANEL
FD	FLOOR DRAIN
FE	FIRE EXTINGUISHER
FEB	FIRE EXTINGUISHER IN SURFACE MOUNT BRACKET
FEC	FIRE EXTINGUISHER CABINET
FEC-FR	FIRE EXTINGUISHER CABINET – FULL-RECESSED
FEC-SR	FIRE EXTINGUISHER CABINET – SEMI-RECESSED
FEC-SM	FIRE EXTINGUISHER CABINET – SURFACE MOUNT
FFE	FINISH FLOOR ELEVATION
FF&E	FURNITURE, FIXTURES, & EQUIPMENT
FRT	FIRE RETARDANT TREATED
FRP	FIBERGLASS REINFORCED POLYMER
FS	FLOOR SINK
GA	GAUGE
GALV	GALVANIZED
GC	GENERAL CONTRACTOR
GFRC	GLASS-FIBER REINFORCED CONCRETE
GFRG	GLASS-FIBER REINFORCED GYPSUM
GPM	GALLONS PER MINUTE
GLULAM	GLUE LAMINATED TIMBER
GSF	GROSS SQUARE FOOTAGE
GYP	GYPSUM
HB	HOSE BIB
HC	HOLLOW CORE
HDWR	HARDWARE
HM	HOLLOW METAL
HORIZ	HORIZONTAL
HR	HOUR
HVAC	HEATING, VENTILATING AND AIR CONDITIONING
IMP	INSULATED METAL PANEL
IN	INCH
INFO	INFORMATION
INSUL	INSULATION
INT	INTERIOR
JAN	JANITOR
JNT	JOINT
LAV	LAVATORY
LBS	POUNDS
LF	LINEAR FEET
LOC	LOCATION / LOCATED
LVT	LUXURY VINYL TILE
LVR	LOUVER
MAINT	MAINTENANCE / MAINTAIN
MATL	MATERIAL(S)
MAX	MAXIMUM
MDF	MEDIUM DENSITY FIBER BOARD
MECH	MECHANICAL
MEP	MECHANICAL, ELECTRICAL, PLUMBING
MEZZ	MEZZANINE
MFR	MANUFACTURER
MIN	MINIMUM
MISC	MISCELLANEOUS
MO	MASONRY OPENING
MTG	MEETING
MTL	METAL
NA	NOT APPLICABLE
NIC	NOT IN CONTRACT
NO	NUMBER
NOM	NOMINAL
NRC	NOISE REDUCTION COEFFICIENT
NTS	NOT TO SCALE
OC	ON CENTER
OD	OVERFLOW DRAIN
OF/CI	OWNER FURNISHED / CONTRACTOR INSTALLED
OF/OI	OWNER FURNISHED / OWNER INSTALLED
OH	OVERHANG
OPP	OPPOSITE
OSB	ORIENTED STRAND BOARD
OTB	OPEN TO BELOW
PLAM	PLASTIC LAMINATE
PLUM	PLUMBING
PLYWD	PLYWOOD
PNT	PAINT
PR	PAIR
PREFIN	PREFINISHED
PSF	POUND PER SQURE FOOT
PSI	POUND PER SQUARE INCH
PT	PRESSURE TREATED
PVC	POLYVINYL CHLORIDE
QTY	QUANTITY
R	RISER
R-#	R-VALUE
RB	RESILIENT BASE
RCP	REFLECTED CEILING PLAN
RD	ROOF DRAIN
RE	REFER TO
REF	REFRIGERATOR
REINF	REINFORCEMENT(ED)
REQ	REQUIRE(D) / REQUIREMENT(S)
REV	REVISION
RF	RESILIENT FLOORING
RM	ROOM
RO	ROUGH OPENING
ROW	RIGHT OF WAY
RTU	ROOF TOP UNIT
SC	SOLID CORE
SCHED	SCHEDULE
SF	SQUARE FEET
SFI-CC	SPRAY-FOAM INSULATION – CLOSED-CELL
SFI-OC	SPRAY-FOAM INSULATION – OPEN-CELL
SI	SQUARE INCHES
SIM	SIMILAR
SOG	SLAB ON GRADE
SPEC	SPECIFICATION
SPS	SOLID POLYMER SURFACE
SQFT	SQUARE FEET
SS	STAINLESS STEEL
STC	SOUND TRANSMISSION COEFFICIENT
STD	STANDARD
STL	STEEL
STOR	STORAGE
STRUCT	STRUCTURAL
SY	SQUARE YARDS
T	TREAD
T&G	TONGUE AND GROOVE
TBD	TO BE DETERMINED
TBR	TO BE REMOVED
TEMP	TEMPORARY
THK	THICK
TO_	TOP OF ___
TYP	TYPICAL
UL	UNDERWRITERS LABORATORY
UNO	UNLESS NOTED OTHERWISE
VB	VAPOR BARRIER
VCT	VINYL COMPOSITION TILE
VERT	VERTICAL
VIF	VERIFY IN FIELD
W/	WITH
W/O	WITHOUT
WC	WATER CLOSET
WD	WOOD
WH	WATER HEATER
WHYD	WALL HYDRANT
WIC	WALK IN CLOSET
WT	WEIGHT
WWF	WELDED WIRE FABRIC
YD	YARD
YH	YARD HYDRANT

GENERAL NOTES

CONTRACT DOCUMENTS

A. DO NOT SCALE CONSTRUCTION DRAWINGS, REFER TO DIMENSIONS AND NOTES ONLY.
B. GENERAL CONTRACTOR (OR CONSTRUCTION MANAGERS DESIGNEE) MUST KEEP AN APPROVED SET OF CONTRACT DOCUMENTS ON SITE AT ALL TIMES.
C. GENERAL CONTRACTOR (OR CONSTRUCTION MANAGERS DESIGNEE) SHALL BE RESPONSIBLE FOR DISTRIBUTION OF COMPLETE SETS OF CONTRACT DOCUMENTS (DRAWINGS & PROJECT MANUAL) TO ALL TRADES. EACH TRADE SHALL REVIEW ALL CONTRACT DOCUMENTS SO AS TO BE AWARE OF ALL WORK TO BE PERFORMED. CLAIMS FOR 'EXTRAS' WILL NOT BE HONORED DUE TO FAILURE TO REVIEW COMPLETE SET OF CONTRACT DOCUMENTS.
D. ARCHITECT TO BE NOTIFIED IN THE EVENT A DISCREPANCY IS FOUND IN THE CONSTRUCTION DOCUMENTS, PRIOR TO THE BEGINNING OF CONSTRUCTION.
E. CIVIL FINISH FLOOR ELEVATION 1290.00' EQUALS ARCHITECTURAL FINISH FLOOR ELEVATION 100'-0", UNLESS NOTED OTHERWISE.
F. GENERAL CONTRACTOR (OR CONSTRUCTION MANAGERS DESIGNEE) IS RESPONSIBLE FOR ABIDING BY AND ENFORCING ALL RULES AND REGULATIONS OF THE OWNER.
G. GENERAL CONTRACTOR (OR CONSTRUCTION MANAGERS DESIGNEE) SHALL COMPLY WITH ALL DIRECTIVES OF THE OWNER. IF CONFLICTS BETWEEN CONTRACT DRAWINGS, PROJECT MANUAL AND REQUIREMENTS OF BUILDING OWNER AND/OR OPERATORS ARISE, THEY SHALL BE BROUGHT TO THE ATTENTION OF THE ARCHITECT IMMEDIATELY.

AUTHORITIES, CODES AND REGULATION

A. GENERAL CONTRACTOR (OR CONSTRUCTION MANAGERS DESIGNEE) IS RESPONSIBLE FOR ABIDING BY AND ENFORCING RULES AND REGULATIONS OF THE OWNER. SHALL OBSERVE ALL REGULATIONS IMPOSED BY ALL AUTHORITIES HAVING JURISDICTION AND OTHER GOVERNING BODIES.
B. ALL WORK PERFORMED SHALL COMPLY WITH ALL APPLICABLE LOCAL, STATE AND NATIONAL CODES.

BIDDING RESPONSIBILITY

A. THE CONSTRUCTION DOCUMENTS MAY NOT DEPICT EVERY CONDITION ENCOUNTERED. THEREFORE, EVERY CONTRACTOR IS RESPONSIBLE FOR FIELD VERIFYING ALL CONDITIONS PRIOR TO SUBMITTING A BID. IF CONDITIONS DIFFER OR ADDITIONAL WORK IS REQUIRED BEYOND THAT STATED IN THE CONSTRUCTION DOCUMENTS, IT IS THE CONTRACTORS RESPONSIBILITY TO BRING THIS TO THE ATTENTION OF THE ARCHITECT IN A REASONABLE TIME PERIOD (IE: 5 WORK DAYS) PRIOR TO BID SUBMISSION OR OTHERWISE INCLUDE SUCH INSTANCES IN THEIR BID SUM OR QUALIFY IN THE BID SUBMITTAL.
B. INFORMATION PROVIDED IN THE CONTRACT DOCUMENTS DOES NOT RELIEVE THE CONTRACTORS RESPONSIBILITY TO FIELD VERIFY ACTUAL QUANTITIES, DIMENSIONS AND CONDITIONS.
C. THE CONTRACTOR IS RESPONSIBLE IN HIS BID SUM FOR THE PATCHING OF ALL ADJACENT MATERIALS, SURFACES AND FINISHES INCLUDING, BUT NOT LIMITED TO, PAINTING, FLOORS, WALLS, WHETHER STATED IN THE CONSTRUCTION DOCUMENTS OR NOT.

CONSTRUCTION RESPONSIBILITY

A. ALL WRITTEN CORRESPONDENCE WILL BE TRANSMITTED FROM SUBCONTRACTOR THROUGH GENERAL CONTRACTOR (OR CONSTRUCTION MANAGER) THROUGH OWNER'S REP TO ARCHITECT. ALL PARTIES INVOLVED ARE TO RECEIVE WRITTEN AND SIGNED COPIES OF SUCH **NO VERBAL AGGREMENTS AFFECTING ALTERNATIVE CONSTRUCTION COST, MATERIALS, METHODS OR OTHER ARRANGEMENTS WILL BE CONSIDERED VALID OR BINDING, AND ARE THEREFORE, DISALLOWED.**
B. GENERAL CONTRACTOR (OR CONSTRUCTION MANAGERS DESIGNEE) IS TO FIELD VERIFY ALL EXISTING CONDITIONS AND DIMENSIONS PRIOR TO CONSTRUCTION. ARCHITECT TO BE NOTIFIED IMMEDIATELY IN THE EVENT A DISCREPANCY IS FOUND.
C. SUBCONTRACTORS TO VERIFY EXISTING CONDITIONS RELATING TO THEIR SCOPE OF WORK. GENERAL CONTRACTOR (OR CONSTRUCTION MANAGERS DESIGNEE) TO BE NOTIFIED IMMEDIATELY IN THE EVENT A DISCREPANCY IS FOUND, TO PROVIDE TO ARCHITECT.
D. GENERAL CONTRACTOR (OR CONSTRUCTION MANAGERS DESIGNEE) TO COORDINATE ALL DATUM POINTS (IE: TOP OF STEEL BEARING HEIGHTS, TOP OF MASONRY HEIGHTS) WITH STRUCTURAL DRAWINGS. ARCHITECT TO BE NOTIFIED IMMEDIATELY IN THE EVENT A DISCREPANCY IS FOUND.
E. GENERAL CONTRACTOR (OR CONSTRUCTION MANAGERS DESIGNEE) SHALL CONTACT THE RESPECTIVE UTILITY COMPANIES AT THE TIME OF CONSTRUCTION TO VERIFY EXACT LOCATIONS, INFORMATION, AND/OR CHANGES OR ADDITIONS.
F. GENERAL CONTRACTOR (OR CONSTRUCTION MANAGERS DESIGNEE) SHALL COORDINATE ALL WORK OF EVERY TRADE AND CHARACTER OF THE PROJECT.
G. GENERAL CONTRACTOR (OR CONSTRUCTION MANAGER) SHALL BE RESPONSIBLE FOR MEANS, METHODS AND SAFETY OF CONSTRUCTION.
H. ALL WORK OF EVERY CHARACTER SHALL BE LAID OUT, BY THE CONTRACTOR WHO SHALL BE RESPONSIBLE, FOR CORRECT FORM AND FIT AND SHALL VERIFY ALL DIMENSIONS AND CONDITIONS AT THE BUILDING SITE PRIOR TO CONSTRUCTION.
I. GENERAL CONTRACTOR (OR CONSTRUCTION MANAGERS DESIGNEE) SHALL CONTAIN ALL CONSTRUCTION ACTIVITY, INCLUDING STORAGE OF MATERIAL AND EQUIPMENT, WITHIN THE CONSTRUCTION LIMITS AT ALL TIMES.
J. GENERAL CONTRACTOR (OR CONSTRUCTION MANAGERS DESIGNEE) SHALL REMOVE ALL CONSTRUCTION DEBRIS FROM JOBSITE. ALL CONSTRUCTION DEBRIS SHALL BE CONTAINED INSIDE CONSTRUCTION LIMITS.
K. GENERAL CONTRACTOR (OR CONSTRUCTION MANAGERS DESIGNEE) IS RESPONSIBLE FOR THE REPAIR OF ALL DAMAGED SURFACES TO REMAIN, WHETHER DAMAGED BY HIMSELF OR SUBCONTRACTORS UNDER HIS CONTROL. REPAIRS ARE TO MATCH EXISTING MATERIALS IN LOOK AND FORM AND MUST BE ACCEPTABLE TO OWNER.

CONSTRUCTION TYPICAL

A. ALL FLOOR TRANSITIONS BETWEEN DIFFERENT MATERIALS SHALL BE SMOOTH AND FLUSH (MAXIMUM = 1/8" PER FOOT SUBSTRATE FEATHER).
B. ALL WALLS WITH ITEMS REQUIRING MOUNTING REINFORCEMENT INCLUDING, BUT NOT LIMITED TO, GRAB BARS, TOILET ACCESSORIES, BUMPERS, CORNER GUARDS, WOOD TRIM, SHELVING, CASEWORK, ETC, SHALL BE REINFORCED WITH CONCEALED, FIRE RETARDANT TREATED WOOD BLOCKING. (GENERAL CONTRACTOR (OR CONSTRUCTION MANAGERS DESIGNEE) RESPONSIBLE FOR THE INSTALLATION OF ALL BLOCKING, TYPICAL.
C. ALL CONCEALED OR EXPOSED WOOD FRAMING AND BLOCKING SHALL BE FIRE RETARDANT TREATED, REGARDLESS OF CODE REQUIREMENT.
D. EXPOSED SHEET OR PLYWOOD WOOD BACKING, INCLUDING BUT NOT LIMITED TO, DATA CLOSET WALL PANELS, MECHANICAL ROOM WALL PANELS, EQUIPMENT BACKING, ETC, SHALL BE FIRE RETARDANT TREATED, REGARDLESS OF CODE REQUIREMENT. WOOD WALL FINISH MATERIALS ARE NOT INCLUDED, SEE FINISH SCHEDULE FOR REQUIREMENTS.

DISCLAIMER

A. PURSUANT TO RSMO 327.411, THE CONSTRUCTION DOCUMENTS, PLANS OR PROJECT MANUAL INTENDED TO BE AUTHENTICATED BY INSIGHT DESIGN ARCHITECTS AND CHIODINI ARCHITECTS ARE LIMITED TO THOSE CONTAINING THE ARCHITECTS SEAL. INSIGHT DESIGN ARCHITECTS AND CHIODINI ARCHITECTS HEREBY DISCLAIM RESPONSIBILITY FOR ALL OTHER CONSTRUCTION DOCUMENTS, PLANS OR INSTRUMENTS RELATING TO OR INTENDED TO BE USED FOR ANY PART OF THE ARCHITECTURE, ENGINEERING OR SURVEYING FOR THIS PROJECT.

SYMBOLS

1 A101 1	INTERIOR ELEVATION
99 A101 99	EXTERIOR ELEVATION
2M12f	PARTITION TYPE
Room name 101	ROOM NAME / NUMBER
LEVEL NAME EL. = XXX' - XX"	ELEVATION MARK
M	TOILET ACCESSORY TAG
M99	WINDOW ELEVATION
M999	DOOR TAG
A	DOOR TYPE TAG
1	FRAME TYPE TAG
GP 15'-0"	CEILING TYPE/HEIGHT TAG
1	REVISION TAG
A1	LIGHTING FIXTURE TAG
	SPOT ELEVATION
	CONCRETE
	RIGID INSULATION
	FINISH WOOD
	BLOCKING
	BATT INSULATION
	AGGREGATE
	EARTH
	E.I.F.S.
	STEEL
	CMU
	GRAVEL
	SAND
	PLYWOOD

LOCATION MAP

PROJECT LOCATION

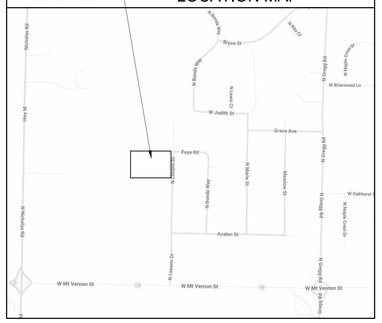

ALTERNATES

A. ALTERNATE NO. 01 - COVERED PARKING:
1. BASE BID ITEM: NO WORK.
2. ALTERNATE ITEM: PROVIDE ASSOCIATED FOOTINGS AND FOUNDATIONS FOR PRE ENGINEERED COVERED PARKING STRUCTURE. PARKING STRUCTURE PROVIDED BY OTHERS INCLUDING GUTTERS AND DOWNSPOUTS, AND LIGHT FIXTURES. SEE SECTION 13 3419 AND CIVIL, ARCHITECTURAL, STRUCTURAL, AND ELECTRICAL DRAWINGS.

B. ALTERNATE NO. 02 - WATER LINE TO FUTURE BUILDING:
1. BASE BID ITEM: INSTALL ELECTRICAL CONDUIT TO FUTURE BUILDING SEE CIVIL
2. ALTERNATE ITEM: INSTALL UNDERGROUND WATER SERVICE TO FUTURE BUILDING. SEE CIVIL DRAWINGS.

C. ALTERNATE NO. 03 - SHADE STRUCTURE AT WEST PATIO:
1. BASE BID ITEM: NO WORK.
2. ALTERNATE ITEM: PROVIDE 26'-8" BY 17' STEEL SHADE STRUCTURE ADJACENT TO THE BUILDING AT THE WEST PATIO. PROVIDE ASSOCIATED FOOTINGS AND FOUNDATIONS, GUTTERS AND DOWNSPOUTS, AND LIGHT FIXTURES. SEE CIVIL, ARCHITECTURAL, STRUCTURAL, AND ELECTRICAL DRAWINGS.

D. ALTERNATE NO. 04 - TRACK INSTALLATION:
1. BASE BID ITEM: LANDSCAPING AT TRACK AREA
2. ALTERNATE ITEM: PROVIDE NEW 1/10TH MILE ASPHALT WALKING TRACK. SEE CIVIL DRAWINGS.

E. ALTERNATE NO. 05 - FARADAY CAGE
1. BASE BID ITEM: PROVIDE A PREFABRICATED FARADAY CAGE IN ROOM 134 BASIS OF DESIGN: TMC BENCHTOP FARADAY CAGE 81-334-06
2. ALTERNATE: PROVIDE FARADAY CAGE PROTECTION TO THE WALLS AROUND ROOM 134. PROVIDE (1) LAYER CYBER CX FARADAY EMF RF SHIELDING COPPER FABRIC ROLL UNDER GYPSUM BOARD AT ALL FOUR WALLS AND CEILING. PROVIDE FARADAY DOOR AND GRILLES ON ALL LIGHTS AND DUCTWORK.

F. ALTERNATE NO 06 - LIGHTNING PROTECTION
1. BASE BID: NO WORK
2. ALTERNATE: PROVIDE LIGHTNING PROTECTION SYSTEM PER SPEC SECTION 26 4113.

DRAWING INDEX

COVERSHEET / GENERAL

SHEET #	SHEET NAME	REVISION #
G000	COVER SHEET	
G001	DRAWING INDEX	
G002	CODE DATA AND LIFE SAFETY	
G003	STORM SHELTER	
G010	ACCESSIBILITY DETAILS	
G011	ACCESSIBILITY DETAILS	
G012	ACCESSIBILITY DETAILS	

CIVIL

SHEET #	SHEET NAME	REVISION #
C1.0	GENERAL LAYOUT PLAN	
C1.1	DEMOLITION PLAN	
C2.1	WEST SITE PLAN	
C2.2	EAST SITE PLAN	
C3.1	WEST GRADING PLAN	
C3.2	EAST GRADING PLAN	
C4.0	UTILITY PLAN	
C5.0	STORM SEWER PLAN	
C6.0	EROSION CONTROL PLAN	
C6.1	EROSION CONTROL DETAILS	
C7.0	EMERGENCY VEHICLE ACCESS PLAN	
C8.0	DETAILS	
C8.1	DETAILS	
C8.2	DETAILS	
C8.3	DETAILS	
C8.4	DETAILS	
L1.0	LANDSCAPE PLAN	
L2.0	LANDSCAPE CALCULATIONS	
L3.0	LANDSCAPE DETAILS	

ARCHITECTURAL

SHEET #	SHEET NAME	REVISION #
A050	ARCHITECTURAL SITE PLAN	
A051	ENLARGED ARCHITECTURAL SITE PLANS	
A052	SHADE STRUCTURE DETAILS	
A053	COVERED PARKING STRUCTURE	
A100	FLOOR PLANS	
A101	ENLARGED FLOOR PLANS - AREA A	
A102	ENLARGED FLOOR PLANS - AREA B	
A110	ROOF PLAN	
A120	REFLECTED CEILING PLAN	
A121	REFLECTED CEILING PLAN - AREA A	
A122	REFLECTED CEILING PLAN - AREA B	
A140	ENLARGED RESTROOM PLANS	
A141	ENLARGED LOCKER ROOM PLANS	
A142	ENLARGED PLANS AND ELEVATIONS	
A200	EXTERIOR ELEVATIONS	
A300	BUILDING SECTIONS	
A350	WALL SECTIONS	
A351	WALL SECTIONS	
A352	WALL SECTIONS	
A500	PLAN DETAILS	
A501	EIFS DETAILS	
A502	WOOD LOOK METAL PANEL DETAILS	
A503	FLAT PROFILE METAL PANEL DETAILS	
A510	ROOF DETAILS	
A520	CEILING DETAILS	
A530	MILLWORK DETAILS	
A540	SECTION DETAILS	
A541	SECTION DETAILS	
A542	SECTION DETAILS	
A600	INTERIOR ELEVATIONS	
A700	DOOR SCHEDULE AND DETAILS	
A702	DOOR AND WINDOW DETAILS	
A703	DOOR AND WINDOW DETAILS	
A710	WINDOW ELEVATIONS - EXTERIOR	
A711	WINDOW ELEVATIONS - INTERIOR	
A720	PARTITION TYPES AND DETAILS	
A721	PARTITION TYPES AND DETAILS	
A722	PARTITION TYPES AND DETAILS	
A800	INTERIOR FINISH SCHEDULE AND LEGEND	
A801	INTERIOR FINISH DETAILS	
A810	ENLARGED FINISH PLAN - AREA A	
A811	ENLARGED FINISH PLAN - AREA B	
A850	FURNITURE/SIGNAGE PLAN	
A900	PERSPECTIVE VIEWS	

STRUCTURAL

SHEET #	SHEET NAME	REVISION #
S000	GENERAL NOTES	
S001	SPECIAL INSPECTIONS & BASIS FOR DESIGN	
S002	SCHEDULES	
S003	TYPICAL DETAILS	
S004	TYPICAL DETAILS	
S101	FOUNDATION PLAN	
S102	FOUNDATION PLANS	
S201	FOUNDATION DETAILS	
S301	LOW ROOF FRAMING PLAN	
S302	HIGH ROOF FRAMING PLAN	
S401	FRAMING DETAILS	
S402	FRAMING DETAILS	
S403	FRAMING DETAILS	
S404	FRAMING DETAILS	
S501	BRACED FRAME ELEVATIONS	

MECHANICAL

SHEET #	SHEET NAME	REVISION #
M101	UNDERSLAB PLUMBING PLAN - AREA A	
M102	UNDERSLAB PLUMBING PLAN - AREA B	
M103	PLUMBING PLAN - AREA A	
M104	PLUMBING PLAN - AREA B	
M201	HVAC PLAN - AREA A	
M202	HVAC PLAN - AREA B	
M300	MECHANICAL SCHEDULES	
M400	MECHANICAL DETAILS	
M401	MECHANICAL DETAILS	
ME000	MECHANICAL AND ELECTRICAL SYMBOLS AND NOTES	
ME101	MECH / ELEC ROOF PLAN	
ME201	MECH / ELEC SITE PLAN	

ELECTRICAL

SHEET #	SHEET NAME	REVISION #
E101	LIGHTING PLAN - AREA A	
E102	LIGHTING PLAN - AREA B	
E201	POWER PLAN - AREA A	
E202	POWER PLAN - AREA B	
E300	ELECTRICAL SCHEDULES	
E301	ELECTRICAL SCHEDULES	
E400	ELECTRICAL DETAILS	

LOW VOLTAGE

SHEET #	SHEET NAME	REVISION #
T-0	SPECIFICATIONS	
T-1.1	SPECIAL SYSTEMS FLOOR PLAN	
T-1.2	SPECIAL SYSTEMS REFLECTED CEILING PLAN	
T-1.3	SPECIAL SYSTEMS SITE PLAN	
T-2.1	AV RISER DIAGRAM	
T-2.2	AV RISER DIAGRAM	
T-3	AV / DATA DIAGRAM	

NIXA POLICE DEPARTMENT
305 N LEEANN DR
NIXA, MO 65714

INSIGHT DESIGN iDeA ARCHITECTS
112 S. Main St., Nixa, MO 65714 Ph: 417-724-8553
CJD Engineering | Energy | Innovation
olsson
METTEMEYER ENGINEERING LLC
Chiodini ARCHITECTS
Architecture / Interior Design / Graphics
1401 S. Brentwood Blvd. | Suite 570 | St. Louis, Missouri 63144
314-725-0088 | art@chiodini.com

Reissue Date

Professional of Record

STATE OF MISSOURI
NATHAN P. RAPP
NUMBER
ARCHITECT

DATE 2025-06-11

Copyright 2025 ©
These prints are the property of the architect and shall be usedonly for the project referenced above

Architect
LMH / NPR

Project #
24-003

Date
2025-06-11

Drawing Title:
DRAWING INDEX

Sheet:
G001

PRINTED: 6/11/2025 11:32:49 AM

CODE DATA

PROJECT DESCRIPTION:

NO. OF STORIES AT OR ABOVE GRADE	1
NO. OF STORIES BELOW GRADE	0
BUILDING HEIGHT	25'-8"
BUILDING AREA	21,280 SF
AUTOMATIC SPRINKLER SYSTEM	FULLY SPRINKLERED

APPLICABLE CODES:

2018 INTERNATIONAL BUILDING CODE (IBC)
2018 INTERNATIONAL MECHANICAL CODE (IMC)
2018 INTERNATIONAL PLUMBING CODE (IPC)
2018 INTERNATIONAL ENERGY CONSERVATION CODE (IECC)
2017 NATIONAL ELECTRICAL CODE (NEC)
2018 INTERNATIONAL FUEL GAS CODE (IFGC)
2018 INTERNATIONAL FIRE CODE (IFC)
NFPA 13, INSTALLATION OF SPRINKLER SYSTEMS
NFPA 14, STANDPIPE & HOSE SYSTEM
NFPA 72, NATIONAL FIRE ALARM CODE
AMERICANS with DISABILITY ACT (ADA) - ICC/ANSI 117.1-2017

INCLUDING CITY OF NIXA AMENDMENTS

DESIGN PARAMETERS:

GROUND SNOW LOAD= 20 PSF
WIND SPEED = 86 MPH NOMINAL
111 MPH ULTIMATE
SEISMIC DESIGN CATEGORY = D
RISK CATEGORY = IV
FROST LINE DEPTH = 30"

OCCUPANCY CLASSIFICATION:

PRIMARY OCCUPANCY
CLASSIFICATIONS (IBC CHAPTER 3)

BUSINESS GROUP	B
ASSEMBLY GROUP	A-3
HIGH HAZARD	H-3
UTILITY	U

SEPARATED OCCUPANCIES

TYPE OF CONSTRUCTION, BUILDING HEIGHT & AREA:

CONSTRUCTION TYPE (IBC CHAPTER 6) — TYPE II-B

OCCUPANCY TYPES (MIXED USE) — B, A-3, H-3, & U

ALLOWABLE HEIGHT (IBC TABLE 504.3 AND SECTION 504.4)

B (BUSINESS)	4 STORIES, 75'
A-3 (ASSEMBLY)	3 STORIES, 75'
H-3 (HIGH HAZARD)	2 STORIES, 55'
U (UTILITY)	3 STORIES, 75'

ALLOWABLE AREA (IBC SECTION 508.4.2)
IN EACH STORY, THE BUILDING AREA SHALL BE SUCH THAT THE SUM OF THE RATIOS OF THE ACTUAL BUILDING AREA OF EACH SEPARATED OCCUPANCY DIVIDED BY THE ALLOWABLE BUILDING AREA OF EACH SEPARATED OCCUPANCY SHALL NOT EXCEED 1.

	ACTUAL BUILDING AREA	ALLOWABLE BUILDING AREA	RATIO
B	19,083 SF	92,000 SF	0.21
A-3	1,094 SF	38,000 SF	0.03
H-3	144 SF	14,000 SF	0.01
U	959 SF	34,000 SF	0.03
TOTAL:	21,280 SF	N/A	**0.28**

OCCUPANCY LOAD CALCULATION:

BUSINESS (B) OCCUPANTS:		
BUSINESS AREAS	= 12,192 SF / 150	= 81.3 occ (082)
ACCESSORY ASSEMBLY	= 1,991 SF / 15	= 132.7 occ (135)
WAREHOUSE	= 1,301 SF / 500	= 2.6 occ (006)
LOCKER ROOMS	= 1,098 SF / 50	= 21.9 occ (023)
EXERCISE ROOMS	= 1,123 SF / 50	= 22.5 occ (023)
ACCESSORY STORAGE & MECH	= 1,378 SF / 300	= 4.6 occ (009)
TOTAL BUSINESS OCCUPANTS:		= 278 OCCUPANTS
ASSEMBLY (A-3) OCCUPANTS:		
ASSEMBLY	= 994 SF / 15	= 66.3 occ (067)
ACCESSORY STORAGE & MECH	= 100 SF / 300	= 0.3 occ (001)
TOTAL ASSEMBLY OCCUPANTS:		= 68 OCCUPANTS
HIGH HAZARD (H-3) OCCUPANTS:		
ACCESSORY STORAGE & MECH	= 144 SF / 300	= 0.5 occ (002)
TOTAL HIGH HAZARD OCCUPANTS:		= 2 OCCUPANTS
UTILITY (U) OCCUPANTS:		
ACCESSORY STORAGE & MECH	= 959 SF / 300	= 3.2 occ (004)
TOTAL UTILITY OCCUPANTS:		= 4 OCCUPANTS
TOTAL OCCUPANTS		= 352 OCCUPANTS

EGRESS EXIT CALCULATION:

TOTAL OCCUPANTS = 352 OCCUPANTS x 0.2"	= 70.4" REQUIRED
EGRESS PROVIDED:	
(2) 72" WIDE DOORS (68" CLEAR)	= 136"
(3) 36" WIDE DOOR (33" CLEAR)	= 99"
TOTAL WIDTH PROVIDED	= 235" PROVIDED

INTERIOR FINISH REQUIREMENTS: (IBC TABLE 803.13)

INTERIOR EXIT STAIRWAYS, RAMPS & PASSAGEWAYS	
GROUP A-3	CLASS B
GROUP B	CLASS B
GROUP H-3	CLASS B
GROUP U	NO RESTRICTIONS
CORRIDORS & ENCLOSURES FOR EXIT ACCESS STAIRWAYS & RAMPS	
GROUP A-3	CLASS B
GROUP B	CLASS C
GROUP H-3	CLASS B
GROUP U	NO RESTRICTIONS
ROOMS & ENCLOSED SPACES	
GROUP A-3	CLASS C
GROUP B	CLASS C
GROUP H-3	CLASS C
GROUP U	NO RESTRICTIONS

PLUMBING FIXTURE COUNTS:

MINIMUM NUMBER OF REQUIRED PLUMBING FIXTURES (IBC CHAPTER 29)

BUSINESS (B) - 284 OCC*	REQUIRED	PROVIDED
MALE: (142 OCC)		
WATER CLOSETS (1 PER 25; 1 PER 50)	4	4
LAVATORIES (1 PER 40; 1 PER 80)	3	4
FEMALE: (142 OCC)		
WATER CLOSETS (1 PER 25; 1 PER 50)	4	4
LAVATORIES (1 PER 40; 1 PER 80)	3	4
OTHER: (284 OCC)		
DRINKING FOUNTAIN (1 PER 100)	3	3
SERVICE SINK	1	1

ASSEMBLY (A-3) - 68 OCC	REQUIRED	PROVIDED
MALE: (34 OCC)		
WATER CLOSETS (1 PER 125)	1	2
LAVATORIES (1 PER 200)	1	2
FEMALE: (34 OCC)		
WATER CLOSETS (1 PER 65)	1	2
LAVATORIES (1 PER 200)	1	2
OTHER: (68 OCC)		
DRINKING FOUNTAIN (1 PER 500)	1	1
SERVICE SINK	1	1

*UTILITY AND HIGH HAZARD OCCUPANCIES ARE ACCESSORY TO THE SEPARATED BUSINESS OCCUPANCY. THE UTILITY & HIGH HAZARD OCCUPANTS ARE LISTED UNDER BUSINESS FOR THE SAKE OF PLUMBING FIXTURE COUNTS

FIRE RESISTANCE REQUIREMENTS:

BUILDING ELEMENTS (IBC TABLE 601)	
STRUCTURAL FRAME:	0 HR
EXTERIOR WALLS BEARING WALLS:	0 HR
NONBEARING BY FIRE SEPARATION DISTANCE: (TABLE 602)	
0' TO 5'	1 HR
5' TO 10'	1 HR
10' TO 30'	0 HR
OVER 30'	0 HR
NON-BEARING INTERIOR WALLS:	0 HR
FLOOR CONSTRUCTION :	0 HR
ROOF CONSTRUCTION:	0 HR
CORRIDORS (1020.1):	0 HR
GARAGE SEPARATION (406.3)	1 HR
SEPARATED OCCUPANCIES (508.4)	
B TO A-3	1 HR
B TO U	1 HR
B TO H-3	1 HR

EXIT REQUIREMENTS:

CAPACITY & EXIT WIDTH (IBC 1005.1)	
STAIRWAYS	0.3" PER OCC
OTHER EGRESS COMPONENTS	0.2" PER OCC
DOOR WIDTH (IBC 1008.1.1)	
MINIMUM WIDTH	32"
MAXIMUM WIDTH	48"
STAIRWAY WIDTH (IBC 1009.1)	
MINIMUM WIDTH	44"
LESS THAN 50 OCCUPANTS	36"
RAMP WIDTH (IBC 1010.5.1)	
MEANS OF EGRESS RAMP	PER 1018.2
RAMP BETWEEN HANDRAILS	36"
COMMON PATH OF TRAVEL (IBC 1014.3)	
ASSEMBLY OCCUPANCY	75'
BUSINESS OCCUPANCY	100'
MINIMUM NUMBER OF EXITS (IBC 1015.1)	
1-49 OCCUPANTS	1 EXIT
49-500 OCCUPANTS	2 EXIT
501-1,000 OCCUPANTS	3 EXIT
MORE THAN 1,000 OCCUPANTS	4 EXITS
TRAVEL DISTANCE (IBC TABLE 1017.2)	
ASSEMBLY OCCUPANCY	250'
BUSINESS OCCUPANCY	300'
HIGH HAZARD OCCUPANCY	150'
UTILITY OCCUPANCY	400'
DEAD ENDS (IBC 1020.4)	
ASSEMBLY & HIGH HAZARD	20'
BUSINESS & UTILITY	50'
CORRIDOR WIDTH (IBC TABLE 1020.2)	
MINIMUM WIDTH	44"
ACCESS TO EQUIPMENT	24"
LESS THAN 50 OCCUPANTS	36"

FIRE PROTECTION SYSTEMS:

AUTOMATIC SPRINKLER SYSTEMS (IFC 903)
FIRE DEPARTMENT CONNECTIONS (IFC 903.3.7)
MONITORING (IFC 903.4.1)
ALARMS (IFC 903.4.2)
STANDPIPE SYSTEMS (IFC 905 & NFPA 14)
FIRE EXTINGUISHERS (IFC 906 & NFPA10)
FIRE ALARM SYSTEMS (IFC 907 & NFPA 72)

BUILDING ENVELOPE DESIGN REQUIREMENTS:

CLIMATE ZONE:	4
ROOF	
INSUL ENTIRELY ABOVE DECK:	R-30 ci
WALLS (ABOVE GRADE)	
MASS	R-9.5 ci
METAL FRAMED	R-13 + R-7.5 ci
WALLS (BELOW GRADE)	
MASS	R-7.5 ci
SLAB ON GRADE FLOORS	R-10 FOR 24" BELOW
OPAQUE DOORS	
SWINGING (ASSEMBLY)	U-0.61
GARAGE DOOR (ASSEMBLY)	U-0.31
FENESTRATION - METAL FRAMING	
FIXED FENESTRATION	U-0.38
OPERABLE FENESTRATION	U-0.45
ENTRANCE DOORS	U-0.77
SHGC LIMITS OF FENSTRATION	
PROJECTION FACTOR > 0.2	
NORTH	0.48
EAST, WEST, & SOUTH	0.36
0.2 ≤ PROJECTION FACTOR < 0.5	
NORTH	0.53
EAST, WEST, & SOUTH	0.43
PROJECTION FACTOR ≥ 0.5	
NORTH	0.58
EAST, WEST, & SOUTH	0.58

KNOXBOX 3200R SERIES KEY BOX

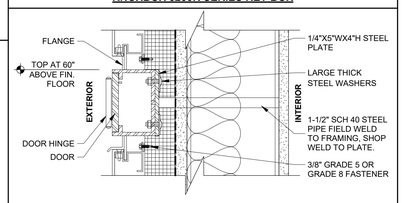

NOTE: MANUFACTURER (MFR) DETAIL HAS BEEN MODIFIED TO FIT THIS BUILDING AND IS SHOWN FOR REFERENCE ONLY. SEE MFR FOR KNOX BOX INSTALLATION INSTRUCTIONS.

OCCUPANCY HATCH KEY

- A-3 (ASSEMBLY)
- B (BUSINESS)
- H-3 (HIGH HAZARD)
- U (UTILITY)

LIFE SAFETY LEGEND

- 1 HR — 1 HOUR SEPARATION
- 2 HR — 2 HOUR SEPARATION
- 1 HR — EXISTING 1 HOUR SEPARATION
- 2 HR — EXISTING 2 HOUR SEPARATION
- Name / 20000 SF / AS&M / 300 | 999 — ROOM NAME; SQUARE FOOTAGE OF ROOM; OCCUPANCY TYPE; OCCUPANT LOAD; OCCUPANT LOAD FACTOR
- XXX / XX — ALLOWABLE CAPACITY OF EXIT (DOOR SIZE MINUS 4" / .2); EGRESS NUMBER
- EXIT SIGNAGE W/ DIRECTIONAL ARROWS

OCCUPANCY TYPE KEY

2018 IBC TABLE 1004.5

MARK	FUNCTION OF SPACE	OCCUPANT LOAD FACTOR
A (T&C)	ASSEMBLY - UNCONCENTRATED (TABLES & CHAIRS)	15 NET
AS&M	ACCESSORY STORAGE & MECHANICAL	300 GROSS
BUS	BUSINESS AREAS	150 GROSS
GYM	EXERCISE ROOMS / GYMNASIUMS	50 GROSS
LOCK	LOCKER ROOMS	50 GROSS
WARE	WAREHOUSE	500 GROSS

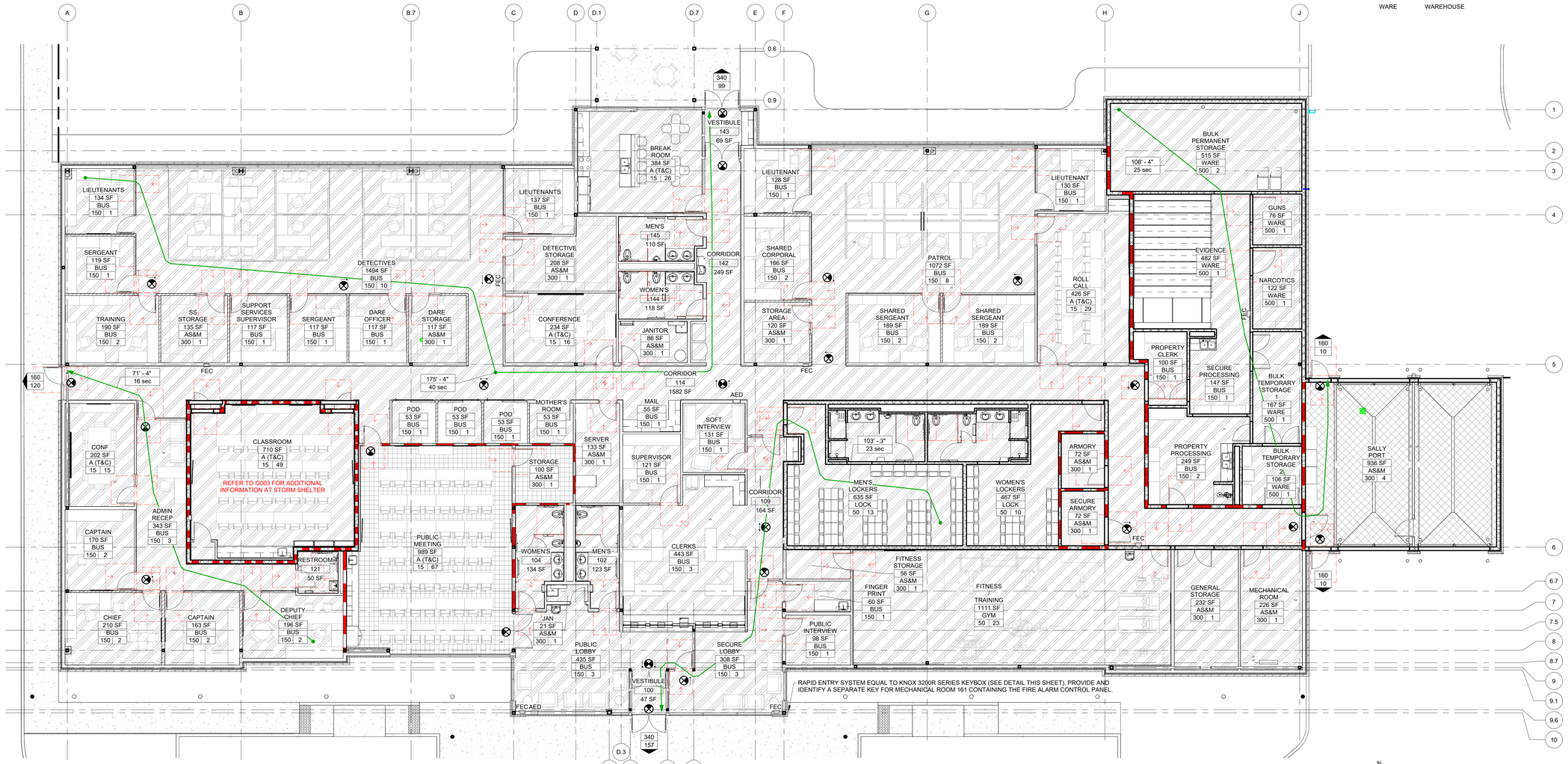

1 FIRST FLOOR LIFE SAFETY PLAN
1/8" = 1'-0"

PRINTED: 6/11/2025 11:32:58 AM

NIXA POLICE DEPARTMENT

305 N LEEANN DR
NIXA, MO 65714

INSIGHT DESIGN IDeA ARCHITECTS
112 S. Main St., Nixa, MO 65714 Ph: 417-724-8553
CJD Engineering | Energy | Innovation
olsson
METTEMEYER ENGINEERING LLC
Chodine ARCHITECTS
Architecture / Interior Design / Graphics
1401 S. Brentwood Blvd. | Suite 570 | St. Louis, Missouri 63144
314-725-0081 | ann@chodine.com

Reissue Date

Professional of Record

STATE OF MISSOURI — NATHAN P. RAPP — NUMBER A-6000 — ARCHITECT

DATE 2025-06-11

Copyright 2025 ©
These prints are the property of the architect and shall be usedonly for the project referenced above

Architect
LMH / NPR

Project #
24-003

Date
2025-06-11

Drawing Title:
CODE DATA AND LIFE SAFETY

Sheet:
G002

DEMO / NEW CONSTRUCTION LEGEND

- NEW CONSTRUCTION: UNRATED, PARTIAL-HEIGHT WALL TO CEILING
- NEW CONSTRUCTION: UNRATED, FULL-HEIGHT WALL TO DECK
- NEW CONSTRUCTION: 1 HOUR FIRE SEPARATION
- NEW CONSTRUCTION: 2 HOUR FIRE SEPARATION

STORM SHELTER PARTITION LEGEND

2M81

ASSEMBLY: (SEE DETAIL 2M81 - SHEET A721)
5/8" GYP BD
7/8" HAT CHANNEL
7 5/8" STRUCTURAL CMU GROUT FILL CAVITY
7/8" HAT CHANNEL
5/8" GYP BD

2M81d

ASSEMBLY: (SEE DETAIL 2M81d- SHEET A721)
5/8" GYP BD
7/8" HAT CHANNEL
7 5/8" STRUCTURAL CMU GROUT FILL CAVITY
2x6 METAL STUDS AT 16" O.C.
5/8" GYP BD

TORNADO STORM SHELTER

TYPE OF SHELTER COMMUNITY STORM SHETLER >50 OCCUPANTS - USE: BUILDING OCCUPANTS

WIND DESIGN CONFORMS TO THE PROVISIONS OF THE ICC/NSSA STANDARD FOR THE DESIGN AND CONSTRUCTION OF STORM SHELTERS, 2020.

- SHELTER DESIGN WIND SPEED (MPH): 250
- WIND EXPOSURE CATEGORY PRESSURES & ZONES: **RE: STRUCTURAL**
- INTERNAL PRESSURE COEFFICIENT, GC_{pi}: **RE: STRUCTURAL**
- TOPOGRAPHIC CATEGORY, K_{zt}: **RE: STRUCTURAL**
- DIRECTIONALITY FACTOR, K_D: **RE: STRUCTURAL**
- STATIC & CYCLIC PRESSURE/IMPACT TEST: **RE STRUCTURAL**
- **RE: STRUCTURAL FOR MIN. FOUNDATION CAPACITY REQUIREMNTS AND STORM SHELTER INSTALLATIONS REQUIREMENTS**

THIS SHELTER HAS NOT BEEN CONSTRUCTED IN AN AREA SUSCEPTIBLE TO FLOODING. THIS AREA IS MAPPED "AREA OF MINIMUL FLOOD HAZARD" ON FEMA FLOOD MAP, AREA #29043C0062D, EFFECTIVE 11/2/2023

LOWEST SHELTER FLOOR ELEVATION: 1293'

STORM SHELTER DESIGN CAPACITY

MAXIMUM STORM SHELTER OCCUPANT LOAD: 60 PERSONS
WHEELCHAIR SPACES:
REQUIRED: 1 PER 200 OCCUPANTS = 1 @ 10 SF = 10 SF
PROVIDED: 1 PROVIDED
STANDING SPACES:
REQUIRED: 59 @ 5 SF = 295 SF
PROVIDED: 522 SF
TOTAL USABLE SHELTER FLOOR AREA:
REQUIRED: 305 SF (295 SF STANDING + 10 SF WHEELCHAIR)
PROVIDED: 547 SF

CRITICAL SUPPORT SYSTEMS:

HVAC SYSTEM (702.4):
- REQUIREMENT FOR VENTILATION (702.4) – EXHAUST FAN IS PROVIDED AT 5 CF/M PER OCCUPANT, SEE MECH.

ELECTRICAL POWER SYSTEMS (702.8):
- REQUIREMENT FOR STANDBY POWER/LIGHTING FOR A PERIOD OF 2 HOURS – PROVIDED VIA UPS, SEE ELEC.

WATER SUPPLY AND WASTE WATER SYSTEM:
- REQUIREMENTS WAIVED BY THE CITY OF NIXA PLANNING DEPARTMENT. OWNER MAY FURNISH BOTTLED WATER.

SANITARY FACILITIES:
- REQUIREMENTS FOR TOILETS – WAIVED BY CITY OF NIXA PLANNING DEPARTMENT. OWNER MAY FURNISH A PORTABLE TOILET IN THE SPACE.

FIRE SEPARATION (603.1):
- WALLS & HORIZONTAL ASSEMBLIES BETWEEN COMMUNITY STORM SHELTERS AND HOST BUILDING AREAS SHALL HAVE A FIRE RESISTANCE RATING OF 2 HOURS, MINIMUM.

FIRST AID (702.9):
- REQUIREMENT FOR A CLASS A FIRST AID KIT COMPLYING WITH ANSI/ASEAI Z308.1
- OFOI FIRST AID KIT IS TO BE PROVIDED

TYPICAL DOOR ASSEMBLY BASIS OF DESIGN:

DOORS, INTERIOR
CECO OR CURRIES DOOR - ASSA ABLOY STORM PRO TORNADO RESISTANT ASSEMBLY - UL CLASSIFIED TO ICC-500 2020 SEE DOOR SCHEDULE AND HARDWARE SET

ALL PENETRATIONS THROUGH THE STORM SHELTER ENVELOPE LARGER THAN 3-1/2" SQUARE INCHES OR 2-1/16" DIAMETER SHALL BE CONSIDERED OPENINGS AND SHALL BE PROTECTED BY OPENING PROTECTIVE DEVICES - REFERENCE STRUCTURAL.

ALL PENETRATIONS IN FIRE WALL ENVELOPE BETWEEN STORM SHELTER AND BUILDING TO MAINTAIN FIRE SEPERATION MINIMUM OF 2 - HOUR RATING AS INDICATED IN PLAN. RE: MECHANICAL, ELECTRICAL, PLUMBING, AND STRUCTURAL DRAWINGS FOR LOCATIONS.

SPECIAL INSTRUCTIONS:

SEE SPECIFICATIONS "018192 STORM SHELTER QUALITY ASSURANCE PLAN" FOR OUTLINE OF SPECIAL INSTRUCTIONS TO BE PROVIDED AND TURNED OVER TO THE OWNER FOR OCCUPANTS USE IN A STORM EVENT.

STORM SHELTER AREA LEGEND

- NOT IN SCOPE OF SHELTER
- CONCENTRATED FURNISHING AREA {501.1.2.1(1)}
  USABLE FACTOR- .50
  49 SF x .5 = 25 USABLE SF
- UNCONCENTRATED FURNISHING AREA {501.1.2.1(2)}
  USABLE FACTOR- .65
  243 SF x .65 = 158 USABLE SF
- OPEN PLAN FURNISHING AREA {501.1.2.1(3)}
  USABLE FACTOR- .85
  428 SF x .85 = 364 USABLE SF

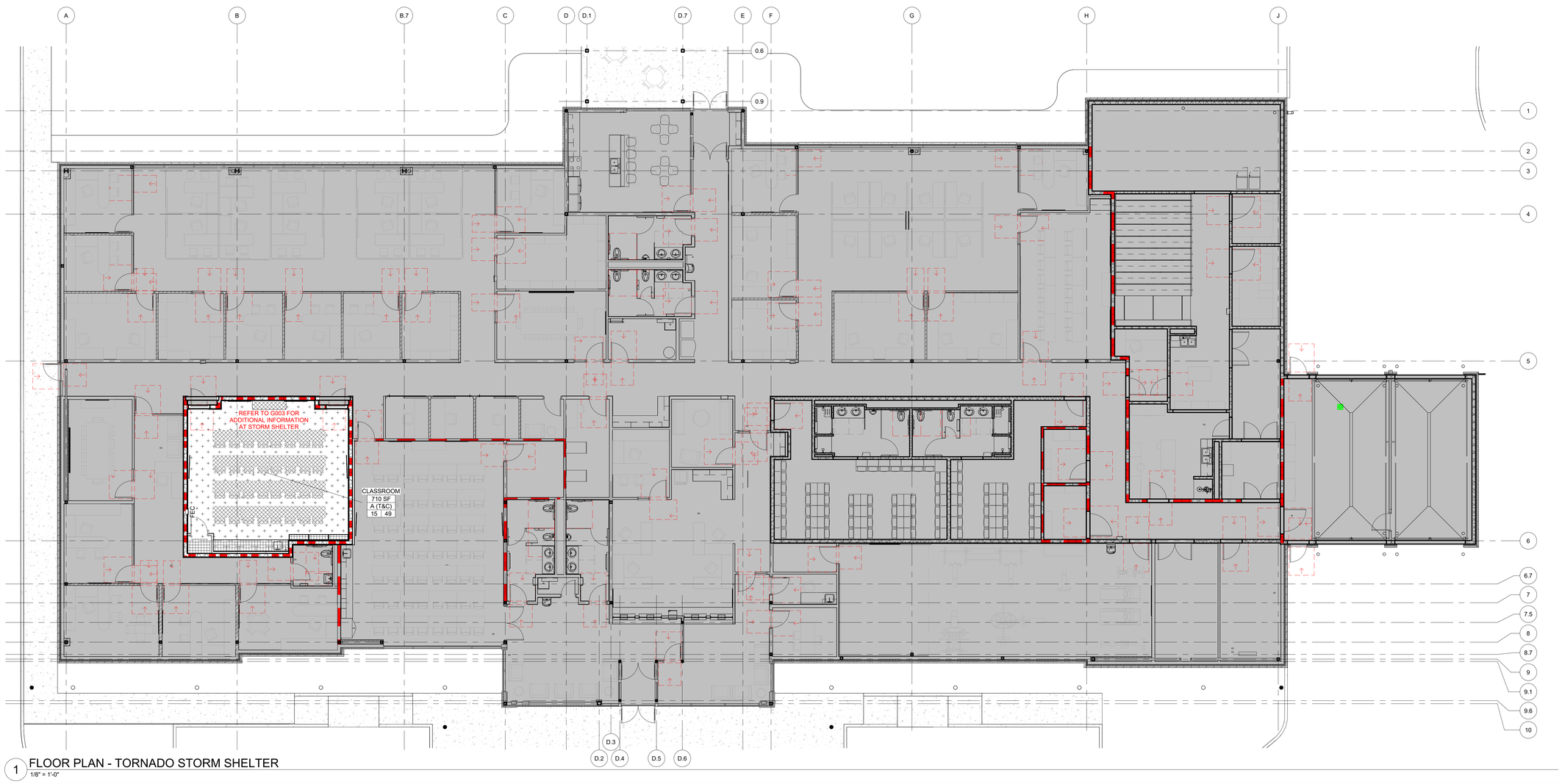

1 FLOOR PLAN - TORNADO STORM SHELTER
1/8" = 1'-0"

PRINTED: 6/11/2025 11:33:15 AM

NIXA POLICE DEPARTMENT

305 N LEEANN DR
NIXA, MO 65714

INSIGHT DESIGN IDeA ARCHITECTS
112 S. Main St., Nixa, MO 65714 Ph: 417-724-8553

CJD Engineering | Energy | Innovation

olsson

METTEMEYER ENGINEERING LLC

Christine ARCHITECTS
Architecture / Interior Design / Graphics
14251 S. Brentwood Blvd. | Suite 375 | St. Louis, Missouri 63144
314-729-3080 | arch@christeinc.com

Reissue Date

Professional of Record

STATE OF MISSOURI
NATHAN P. RAPPAPORT
NUMBER A-2001038754
ARCHITECT

DATE 2025-06-11

Copyright 2025 ©
These prints are the property of the architect and shall be usedonly for the project referenced above

Architect
LMH / NPR

Project #
24-003

Date
2025-06-11

Drawing Title:
STORM SHELTER

Sheet:
G003

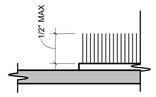

1 CARPET PILE HEIGHT
1 : 1

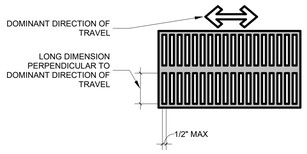

2 ELONGATED OPENINGS IN FLOOR
1 1/2" = 1'-0"

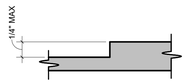

3 VERTICAL CHANGE IN LEVEL
1 : 1

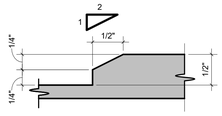

4 BEVELED CHANGE IN LEVEL
1 : 1

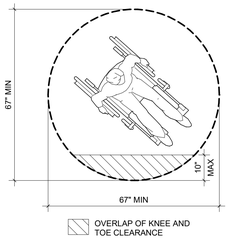

5 CIRCULAR TURNING SPACE - NEW BUILDINGS AND FACILITIES
1/2" = 1'-0"

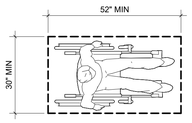

6 CLEAR FLOOR OR GROUND SPACE - NEW BUILDINGS AND FACILITIES
1/2" = 1'-0"

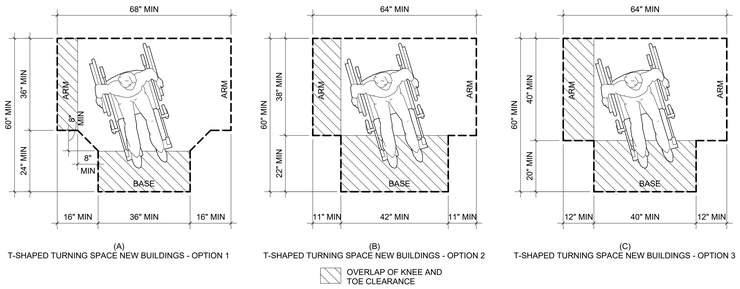

7 T-SHAPED TURNING SPACE - NEW BUILDINGS AND FACILITIES
1/2" = 1'-0"

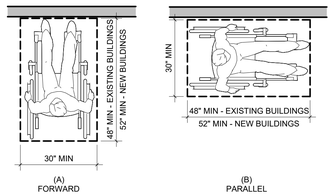

8 POSITION OF CLEAR FLOOR SPACE
1/2" = 1'-0"

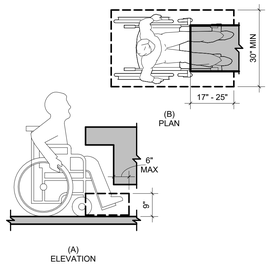

9 TOE CLEARANCE
1/2" = 1'-0"

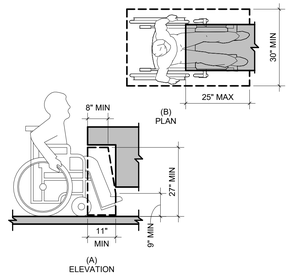

10 KNEE CLEARANCE
1/2" = 1'-0"

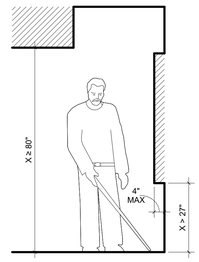

11 LIMITS OF PROTRUDING OBJECTS
1/2" = 1'-0"

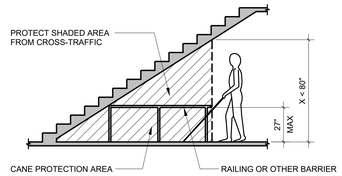

12 VERTICAL CLEARANCE
1/4" = 1'-0"

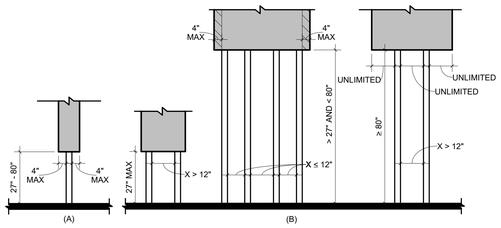

13 POST MOUNTED PROTRUDING OBJECTS
3/8" = 1'-0"

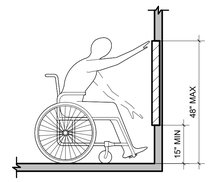

14 UNOBSTRUCTED FORWARD REACH
1/2" = 1'-0"

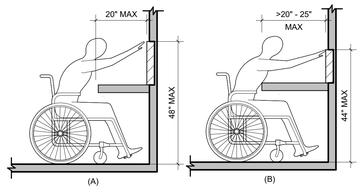

15 OBSTRUCTED HIGH FORWARD REACH
1/2" = 1'-0"

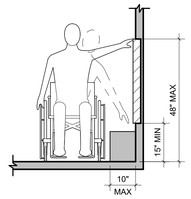

16 UNOBSTRUCTED SIDE REACH
1/2" = 1'-0"

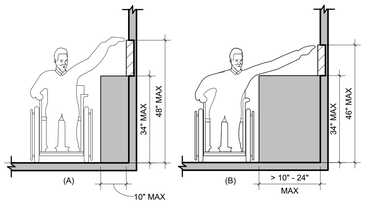

17 OBSTRUCTED HIGH SIDE REACH
1/2" = 1'-0"

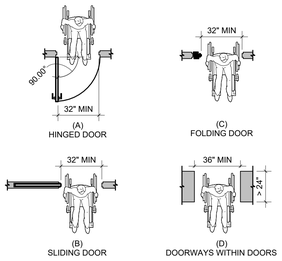

18 CLEAR WIDTH OF DOORWAYS
1/4" = 1'-0"

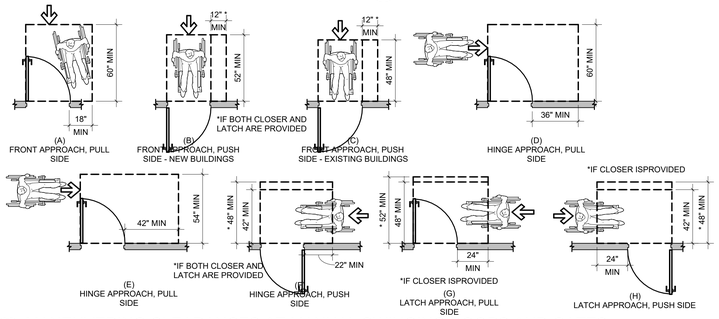

19 MANEUVERING CLEARANCES AT MANUAL SWINGING DOORS AND GATES
1/4" = 1'-0"

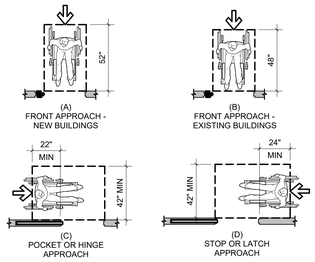

20 MANEUVERING CLEARANCES AT SLIDING AND FOLDING DOORS
1/4" = 1'-0"

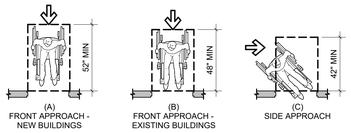

21 MANEUVERING CLEARANCES FOR DOORWAYS WITHOUT DOORS OR GATES
1/4" = 1'-0"

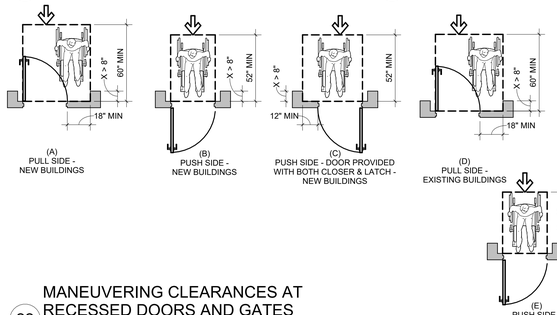

22 MANEUVERING CLEARANCES AT RECESSED DOORS AND GATES
1/4" = 1'-0"

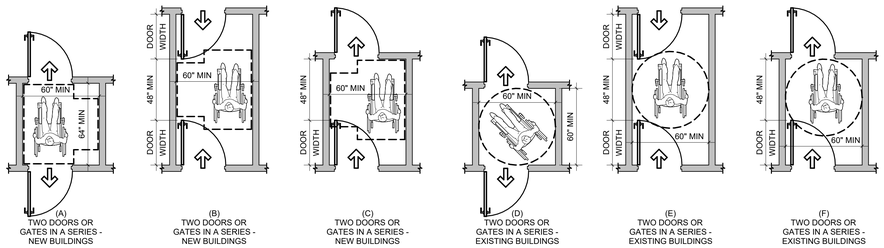

23 DOORS IN SERIES AND GATES IN SERIES
1/4" = 1'-0"

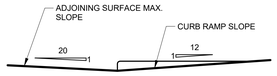

24 COUNTER SLOPE OF SURFACES ADJACENT TO CURB RAMPS
1/2" = 1'-0"

PRINTED: 6/11/2025 11:33:19 AM

NIXA POLICE DEPARTMENT

305 N LEEANN DR
NIXA, MO 65714

INSIGHT DESIGN IDeA ARCHITECTS
112 S. Main St., Nixa, MO 65714 Ph: 417-724-8553

CJD Engineering | Energy | Innovation

olsson

METTEMEYER ENGINEERING LLC

Chiodini ARCHITECTS
Architecture / Interior Design / Graphics
1401 S. Brentwood Blvd. | Suite 575 | St. Louis, Missouri 63144
314-725-5085 | arch@chiodini.com

Reissue Date

Professional of Record

STATE OF MISSOURI
NATHAN P. RAPP
NUMBER A-6000
ARCHITECT

DATE 2025-06-11

Copyright 2025 ©
These prints are the property of the architect and shall be usedonly for the project referenced above

Architect
LMH / NPR

Project #
24-003

Date
2025-06-11

Drawing Title:
ACCESSIBILITY DETAILS

Sheet:
G010

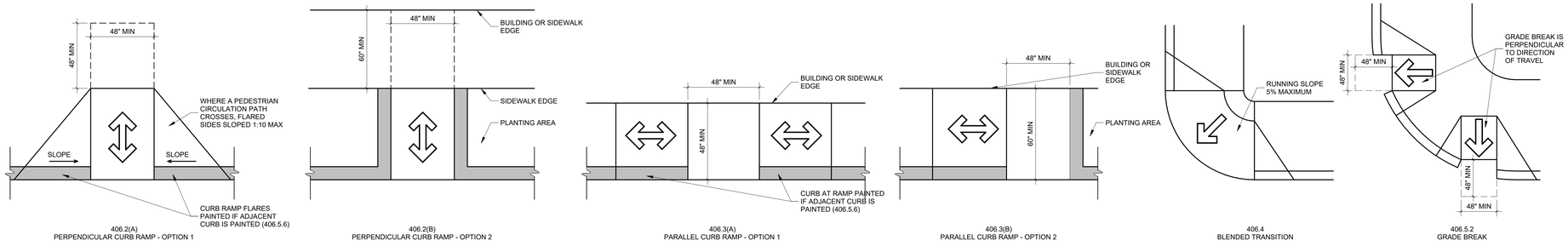

1 CURB RAMPS
1/2" = 1'-0"

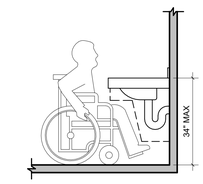

2 HEIGHT OF LAVATORIES AND SINKS
1/2" = 1'-0"

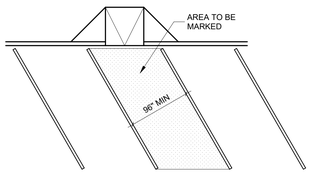

3 PASSENGER LOADING ZONE ACCESS AISLE - PERPENDICULAR OR ANGLED PARKING SPACES
1/8" = 1'-0"

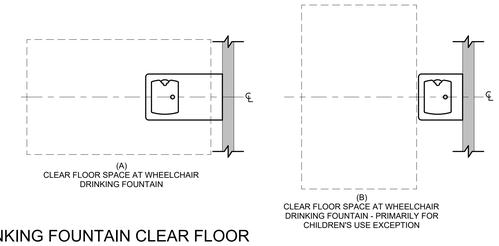

4 DRINKING FOUNTAIN CLEAR FLOOR SPACE
3/4" = 1'-0"

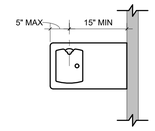

5 DRINKING FOUNTAIN SPOUT LOCATION
3/4" = 1'-0"

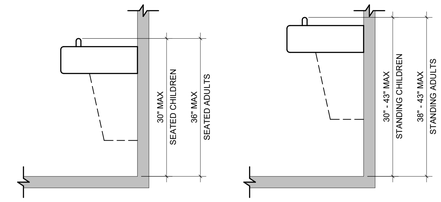

6 DRINKING FOUNTAIN SPOUT HEIGHT AND LOCATION
3/4" = 1'-0"

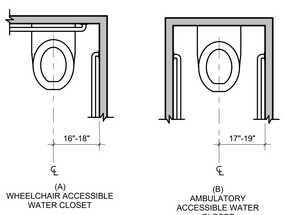

7 WATER CLOSET LOCATION
1/2" = 1'-0"

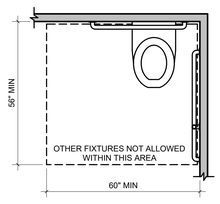

8 SIZE OF CLEARANCE AT WATER CLOSETS
1/2" = 1'-0"

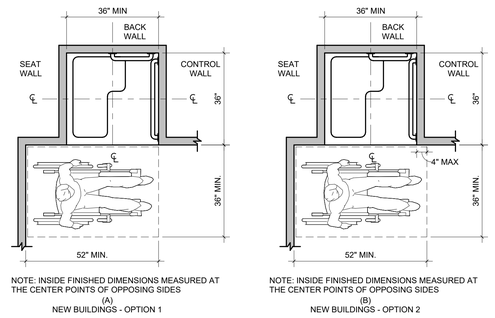

9 TRANSFER TYPE SHOWER SIZE AND CLEARANCE
1/2" = 1'-0"

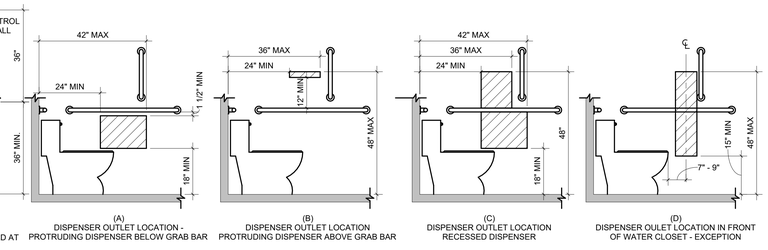

10 DISPENSER OUTLET LOCATION
1/2" = 1'-0"

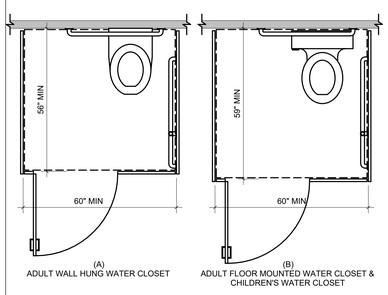

11 SIZE OF WHEELCHAIR ACCESSIBLE TOILET COMPARTMENT
1/2" = 1'-0"

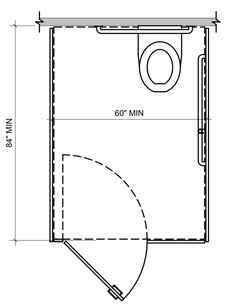

12 ALT WHEELCHAIR TOILET COMPT
1/2" = 1'-0"

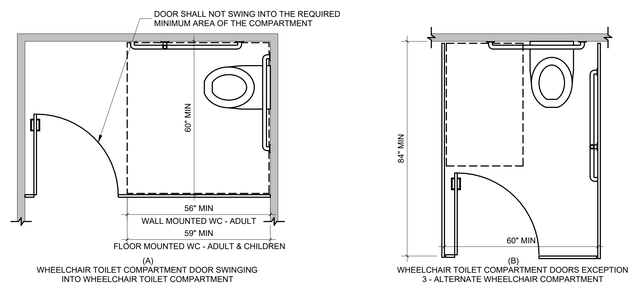

13 ALTERNATE WHEELCHAIR TOILET COMPARTMENT - DOORS
1/2" = 1'-0"

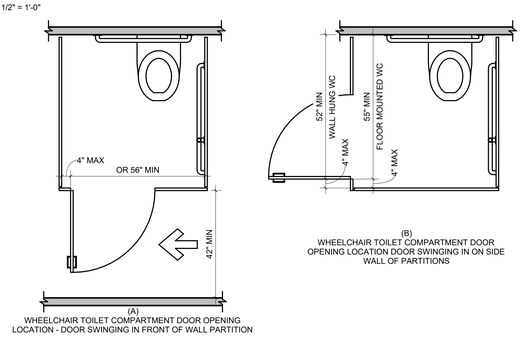

14 DOOR OPENING LOCATIONS
1/2" = 1'-0"

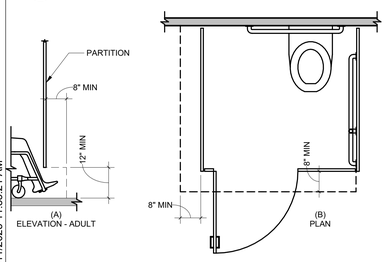

15 WHEELCHAIR ACCESSIBLE TOILET COMPARTMENT TOE CLEARANCE
1/2" = 1'-0"

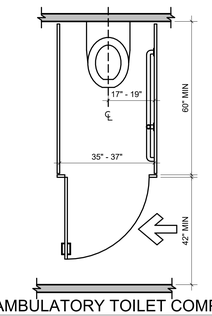

16 AMBULATORY TOILET COMPARTMENT
1/2" = 1'-0"

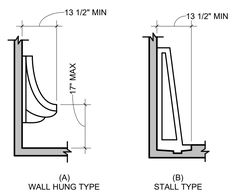

17 HEIGHT AND DEPTH OF URINALS
1/2" = 1'-0"

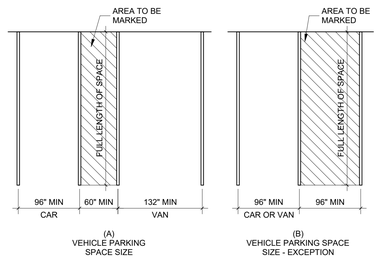

18 VEHICLE PARKING SPACES
1/8" = 1'-0"

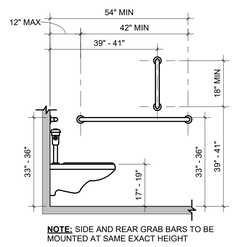

NOTE: SIDE AND REAR GRAB BARS TO BE MOUNTED AT SAME EXACT HEIGHT

19 SIDE WALL GRAB BAR AT WATER CLOSETS
1/2" = 1'-0"

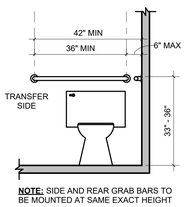

NOTE: SIDE AND REAR GRAB BARS TO BE MOUNTED AT SAME EXACT HEIGHT

20 REAR WALL GRAB BAR AT WATER CLOSETS
1/2" = 1'-0"

PRINTED: 6/11/2025 11:33:21 AM

NIXA POLICE DEPARTMENT

305 N LEEANN DR
NIXA, MO 65714

INSIGHT DESIGN IDeA ARCHITECTS
112 S. Main St., Nixa, MO 65714 Ph: 417-724-8553

CJD Engineering | Energy | Innovation

olsson

METTEMEYER ENGINEERING LLC

Chiodini ARCHITECTS
Architecture / Interior Design / Graphics
1401 S. Brentwood Blvd. | Suite 570 | St. Louis, Missouri 63144
314-725-0088 | art@chiodini.com

Reissue Date

Professional of Record

STATE OF MISSOURI
NATHAN P. RAPP
NUMBER A-2001038751
ARCHITECT

DATE 2025-06-11

Copyright 2025 ©
These prints are the property of the architect and shall be usedonly for the project referenced above

Architect
LMH / NPR

Project #
24-003

Date
2025-06-11

Drawing Title:
ACCESSIBILITY DETAILS

Sheet:
G011

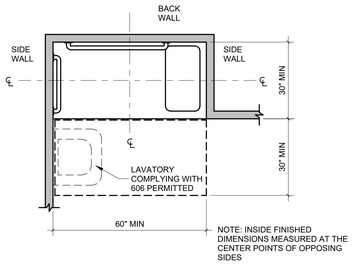

1 STANDARD ROLL-IN TYPE SHOWER SIZE AND CLEARANCE
1/2" = 1'-0"

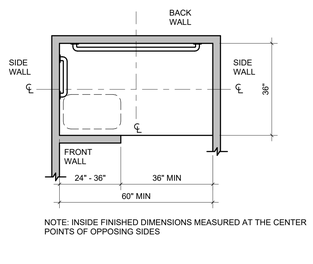

2 ALTERNATE ROLL-IN TYPE SHOWER SIZE AND CLEARANCE
1/2" = 1'-0"

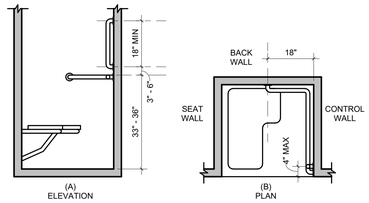

3 GRAB BARS FOR TRANSFER TYPE SHOWER
1/2" = 1'-0"

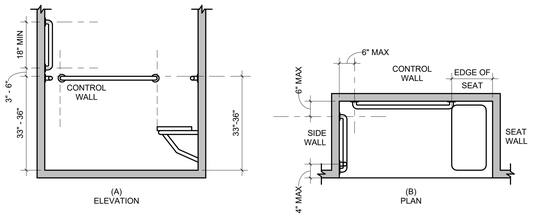

4 GRAB BARS FOR STANDARD ROLL-IN TYPE SHOWERS
1/2" = 1'-0"

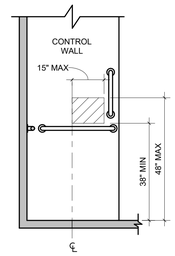

5 TRANSFER-TYPE SHOWER CONTROL LOCATION
1/2" = 1'-0"

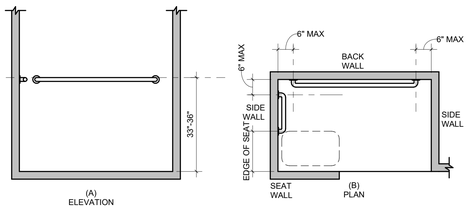

6 GRAB BARS FOR ALTERNATE ROLL-IN TYPE SHOWER
1/2" = 1'-0"

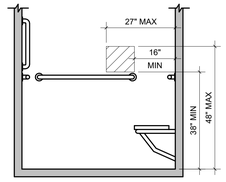

7 ROLL-IN-TYPE SHOWER CONTROL LOCATION
1/2" = 1'-0"

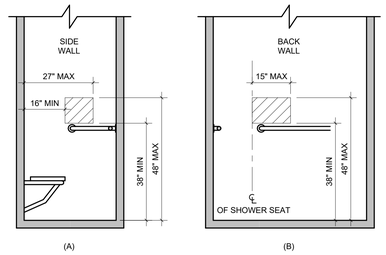

8 ALTERNATE ROLL-IN-TYPE SHOWER CONTROL LOCATION
1/2" = 1'-0"

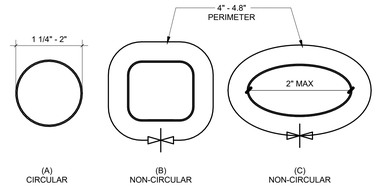

9 GRAB BAR NON-CIRCULAR CROSS SECTION
1/2" = 1'-0"

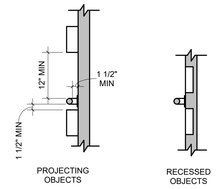

10 SPACING OF GRAB BARS
3/4" = 1'-0"

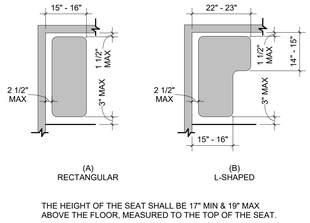

11 EXTENT OF SEAT
1/2" = 1'-0"

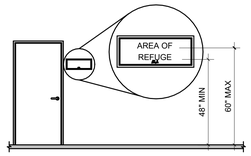

12 HEIGHT OF TACTILE CHARACTERS ABOVE FINISH FLOOR OR GROUND
1/4" = 1'-0"

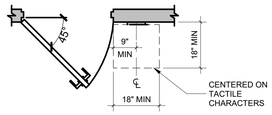

13 LOCATION OF TACTILE SIGNS AT DOORS
1/2" = 1'-0"

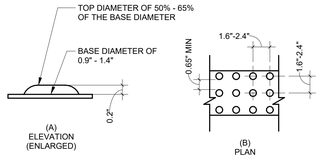

14 SIZE AND SPACING OF TRUNCATED DOMES
1 1/2" = 1'-0"

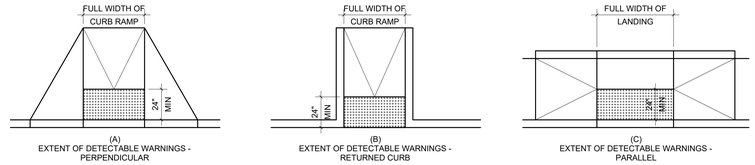

15 DEPTH AND WIDTH OF DETECTABLE WARNING SURFACES
1/4" = 1'-0"

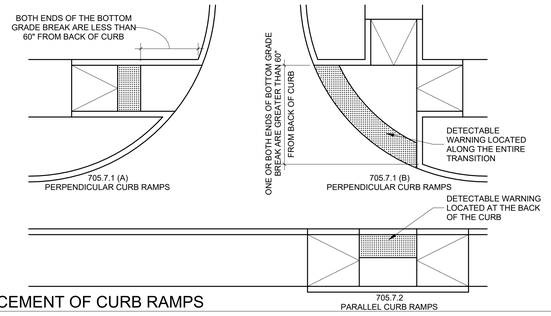

16 PLACEMENT OF CURB RAMPS
3/16" = 1'-0"

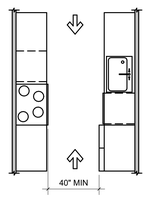

17 PASS THROUGH KITCHENS
1/4" = 1'-0"

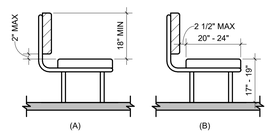

18 BENCH BACK SUPPORT
1/2" = 1'-0"

PRINTED: 6/11/2025 11:33:23 AM

NIXA POLICE DEPARTMENT

305 N LEEANN DR
NIXA, MO 65714

INSIGHT DESIGN IDeA ARCHITECTS
112 S. Main St., Nixa, MO 65714 Ph: 417-724-8553

CJD Engineering | Energy | Innovation

olsson

METTEMEYER ENGINEERING LLC

Christine ARCHITECTS
Architecture / Interior Design / Graphics
1401 S. Brentwood Blvd. | Suite 370 | St. Louis, Missouri 63144
314-725-3088 | ann@christinearch.com

Reissue Date

Professional of Record

STATE OF MISSOURI
NATHAN P. RAPP
NUMBER A-2001038771
ARCHITECT

DATE 2025-06-11

Copyright 2025 ©
These prints are the property of the architect and shall be usedonly for the project referenced above

Architect
LMH / NPR

Project #
24-003

Date
2025-06-11

Drawing Title:
ACCESSIBILITY DETAILS

Sheet:
G012

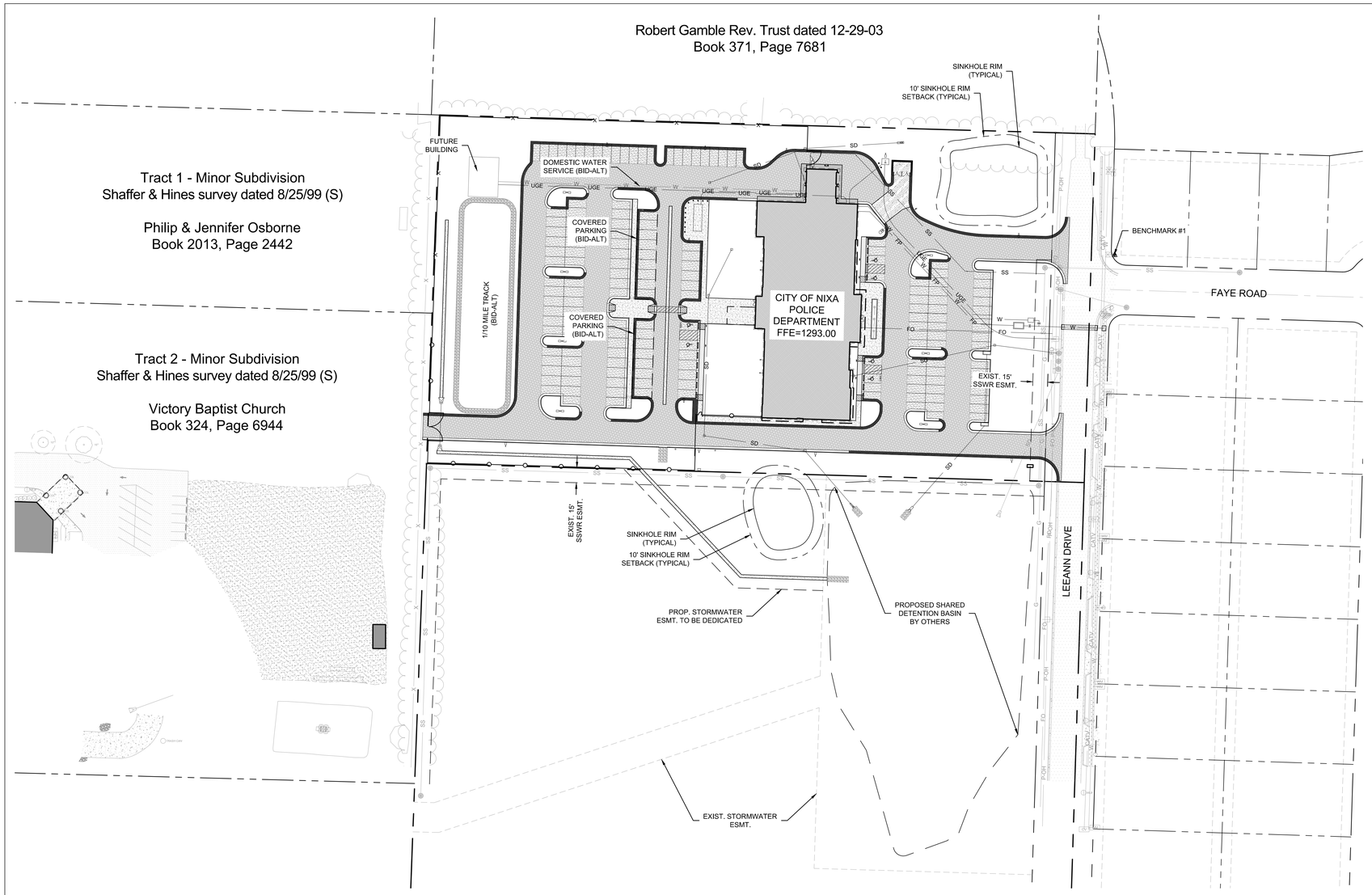

SITE INFORMATION / PARKING TABLE	
LEGAL DESCRIPTION	
TRACT 1 OF AN ADMINISTRATIVE MINOR SUBDIVISION IN THE CITY OF NIXA, CHRISTIAN COUNTY, MISSOURI	
ADDRESS	
305 N. LEEANN DRIVE, NIXA, MISSOURI 65714	
SITE DATA	
PROPOSED LOT AREA	5.03± ACRES 218,889± S.F.
TOTAL BUILDING FLOOR AREA	21,280± S.F.
TOTAL OPEN SPACE AREA	2.02 ACRES 87,991± S.F.
TOTAL IMPERVIOUS AREA	3.01± ACRES 131,033± S.F.
ZONING	
GC - GENERAL COMMERCIAL	
PRESENT USE	VACANT LOT
PROPOSED USE	NIXA CITY POLICE DEPARTMENT
REQUIRED PARKING	
PARKING RATIO	1 SPACE / 200 S.F. GROSS FLOOR AREA
STANDARD STALLS	101 STALLS
STANDARD ACCESSIBLE STALLS	5 STALLS
TOTAL	106 STALLS
PROVIDED PARKING (SUBJECT TO DESIGN EXCEPTION APPROVAL)	
10'x 20' STALLS	83 STALLS
10'x 20' ACCESSIBLE STALLS	2 STALLS
STANDARD 9'x 19' STALLS	73 STALLS
STANDARD 9'x 19' ACCESSIBLE STALLS	4 STALLS
TOTAL	162 STALLS
PARKING RATIO	1.52 SPACES / 200 S.F. GROSS FLOOR SPACE

LEGEND

- PROPERTY LINE
- RIGHT-OF-WAY LINE
- PROP. EASEMENT
- BUILDING SETBACK
- PROP. DETENTION AREA
- SITE BENCHMARK
- EXIST. TRANSFORMER
- EXIST. FIRE HYDRANT
- SS — EXIST. SANITARY PIPE
- P-OH — EXIST. OVERHEAD POWER
- W — EXIST. WATER PIPE
- SD — EXIST. STORM SEWER PIPE
- G — EXIST. GAS PIPE
- FO — EXIST. FIBER LINE
- UGE — UGE — EXIST. UNDERGROUND ELECTRIC
- EXIST. GUY WIRE
- EXIST. POWER POLE
- EXIST. LIGHT POLE
- EXIST. SIGN
- EXIST. WATER METER
- EXIST. TELEPHONE CABINET
- EXIST. TELEPHONE VAULT
- EXIST. BOLLARD
- EXIST. TREE

NIXA POLICE DEPARTMENT

305 N. LEEANN DRIVE
NIXA, MO 65714

INSIGHT DESIGN IDeA ARCHITECTS
112 S. Main St., Nixa, MO 65714 Ph: 417-724-8553

CJD Engineering | Energy | Innovation

olsson

METTEMEYER ENGINEERING

Chiodini ARCHITECTS
Architecture / Interior Design / Graphics
1401 S. Brentwood Blvd. - Suite 375 St. Louis, Missouri 63144
314-255-0888 | ann@chiodini.com

Reissue Date

Professional of Record

STATE OF MISSOURI
RICKY HAASE
PE-2019017828
06/11/2025
PROFESSIONAL ENGINEER

DATE 06/11/2025

Copyright 2024 ©
These prints are the property of the architect and shall be usedonly for the project referenced above

Drawn by
BWS

Project #
024-00531

Date
2025.06.11

Drawing Title:
GENERAL LAYOUT PLAN

Sheet:
C1.0

GENERAL NOTES:

1. CONTRACTOR SHALL HAVE ONE (1) SIGNED COPY OF THE PLANS (APPROVED BY CITY OF NIXA, MO) AND ONE (1) COPY OF THE APPROPRIATE DESIGN AND CONSTRUCTION STANDARDS & SPECIFICATIONS AT THE SITE AT ALL TIMES.

2. ALL REFERENCES CONTAINED WITHIN THESE PLANS TO THE OWNER'S ENGINEER ARE HEREBY REFERENCED OLSSON, INC.

3. THE EXISTING UTILITY LOCATIONS SHOWN ON THE PLANS ARE APPROXIMATE AND MAY NOT INCLUDE ALL LINES PRESENT. THE CONTRACTOR SHALL BE RESPONSIBLE TO CALL "1-800-DIG-RITE", AND COORDINATE FIELD LOCATION OF EXISTING UNDERGROUND UTILITIES PRIOR TO BEGINNING GRADING ACTIVITIES. !!STOP!! CALL BEFORE YOU DIG!!

4. UTILITIES AS SHOWN WERE OBTAINED FROM INFORMATION INDICATED ON THE SURVEY OR BY FIELD OBSERVATION. CONTRACTOR SHALL FIELD VERIFY ALL HORIZONTAL AND VERTICAL LINES AND GRADES OF EXISTING UTILITIES PRIOR TO THE CONSTRUCTION OF IMPROVEMENTS. CONTRACTOR SHALL NOTIFY THE ENGINEER IMMEDIATELY UPON DISCOVERY OF A DISCREPANCY BETWEEN THE CONTRACT DRAWINGS AND ACTUAL FIELD CONDITIONS.

5. CONTRACTOR SHALL NOT CHANGE OR DEVIATE FROM THE PLANS WITHOUT FIRST OBTAINING WRITTEN APPROVAL FROM THE OWNER AND ENGINEER.

6. CONTRACTOR SHALL BE RESPONSIBLE TO OBTAIN ALL PERMITS AND PAY ALL FEES AS REQUIRED BY THE CONSTRUCTION COVERED IN THESE PLANS.

7. ALL WORK AND MATERIALS SHALL BE SUBJECT TO INSPECTION AND APPROVAL BY THE OWNER OR THE OWNER'S REPRESENTATIVE.

8. ANY ESTIMATES OF QUANTITIES ARE FOR INFORMATIONAL PURPOSES ONLY. CONTRACTOR AND SUBCONTRACTOR SHALL BE RESPONSIBLE FOR DETERMINING ALL QUANTITIES. CONTRACTOR SHALL PROVIDE ALL WORK AND MATERIALS TO COMPLETE CONSTRUCTION AS SHOWN ON PLANS.

9. THE CONTRACTOR SHALL BE RESPONSIBLE FOR THE RESTORATION OF THE RIGHT-OF-WAY AND FOR DAMAGED IMPROVEMENTS SUCH AS CURBS, SIDEWALKS, STREET LIGHT AND TRAFFIC SIGNAL JUNCTION BOXES, TRAFFIC SIGNAL LOOP LEAD INS, SIGNAL POLES, ETC. DAMAGED IMPROVEMENTS SHALL BE REPAIRED IN CONFORMANCE WITH THE LATEST CITY STANDARDS AND TO THE CITY'S SATISFACTION.

10. CONTRACTOR SHALL TAKE CARE NOT TO DAMAGE ANY EXISTING STREET, CURB AND GUTTER, SIDEWALK, DRIVEWAYS OR STRUCTURE UNLESS SHOWN TO BE REMOVED.

11. ALL WORK WITHIN ROAD RIGHT-OF-WAY SHALL CONFORM TO THE CITY OF NIXA, MO REQUIREMENTS, UNLESS OTHERWISE NOTED.

12. ALL TRAFFIC CONTROL SHALL BE IN CONFORMANCE WITH THE MANUAL OF UNIFORM TRAFFIC CONTROL DEVICES (MUTCD)

13. CONTRACTOR IS RESPONSIBLE FOR PROTECTION OF ALL PROPERTY CORNERS. ANY PROPERTY CORNER DISTURBED OR DAMAGED BY GRADING ACTIVITIES SHALL BE RESET BY A PROFESSIONAL LAND SURVEYOR LICENSED IN THE STATE OF MISSOURI, AT THE CONTRACTORS EXPENSE.

14. CONTRACTOR AND SUBCONTRACTOR SHALL BE RESPONSIBLE FOR DETERMINING ALL EARTHWORK QUANTITIES. CONTRACTOR SHALL PROVIDE ALL WORK AND MATERIALS AS SHOWN TO COMPLETE CONSTRUCTION SHOWN ON PLANS.

15. THE CONTOUR LINES, SPOT ELEVATIONS AND BUILDING FLOOR ELEVATIONS SHOWN ARE TO FINISH GRADE FOR TOP OF PAVEMENT, SIDEWALKS, CURBS AND FLOOR SLABS, ETC. REFER TO TYPICAL SECTIONS FOR PAVING, SLAB AND AGGREGATE BASE THICKNESS TO DEDUCT FOR GRADING LINE ELEVATIONS.

16. CONTRACTOR SHALL FINISH GRADE SLOPES AS SHOWN NO STEEPER THAN 1 FOOT VERTICAL IN 3 FEET HORIZONTAL.

17. THE CONTRACTOR SHALL GRADE LANDSCAPED AREAS AT A MIN. OF 1% TO PROVIDE POSITIVE DRAINAGE AWAY FROM BUILDINGS AND SIDEWALKS WHEN FINISH LANDSCAPE MATERIALS ARE IN PLACE, UNLESS SPECIFIED OTHERWISE.

18. ALL BACKFILL SHALL BE TAMPED. BACKFILL WITHIN THE RIGHT-OF-WAY SHALL BE COMPACTED TO 95% MAX. DENSITY AS PER ASTM-D698 (STANDARD PROCTOR COMPACTION)

19. THE CONTRACTOR IS RESPONSIBLE FOR ATTENDING TO AND CORRECTING UNSUITABLE SOIL CONDITIONS RELATED TO PLOW ZONES, WET SOILS AND OTHER CONDITIONS. THE UNSUITABLE CONDITIONS MUST BE CORRECTED PER THE GEOTECHNICAL ENGINEER'S REPORT, WHERE REQUIRED, TO MEET PROJECT NEEDS.

20. ALL EXTERIOR CONCRETE SHALL HAVE A MINIMUM 28-DAY COMPRESSIVE STRENGTH OF 4000 PSI AND BE AIR ENTRAINED.

21. CONTRACTOR SHALL BE RESPONSIBLE FOR KEEPING THE PUBLIC STREETS IN THE VICINITY OF THE JOB SITE CLEAN AND FREE OF ROCKS, SOIL/MUD AND DEBRIS DURING ALL PHASES OF CONSTRUCTION.

22. CONTRACTOR SHALL CLEAN OUT ALL EXISTING AND PROPOSED INLETS, PIPES AND MANHOLES OF DEBRIS AND SEDIMENTATION AT COMPLETION OF SITEWORK. THIS WORK SHALL BE DONE TO THE SATISFACTION OF THE OWNER AND THE CITY OF NIXA, MO.

23. CONTRACTOR SHALL RETAIN FLOATABLE WIND BLOWN MATERIALS ON SITE BY STORING ALL TRASH AND BUILDING MATERIAL WASTE IN ENCLOSURES UNTIL PROPER DISPOSAL AT AN OFF-SITE FACILITY. CONTRACTOR TO CHECK ADJACENT AREAS DAILY AND PICK UP CONSTRUCTION WASTE MATERIALS AND DEBRIS THAT HAVE BLOWN OR WASHED OFF-SITE.

24. CONTRACTOR IS RESPONSIBLE FOR PROVIDING BERMS, SILT FENCES, OR OTHER MEANS TO PREVENT ERODED MATERIALS FROM REACHING THE PUBLIC RIGHT-OF-WAY AND ADJACENT PROPERTIES. IN THE EVENT THE PREVENTION MEASURES ARE NOT EFFECTIVE, THE CONTRACTOR SHALL REMOVE ANY DEBRIS, SILT, OR MUD AND RESTORE THE RIGHT-OF-WAY TO ORIGINAL OR BETTER CONDITION.

25. CONTRACTOR SHALL BE RESPONSIBLE TO CONTROL DOWNSTREAM EROSION AND SILTATION DURING ALL PHASES OF CONSTRUCTION. EROSION CONTROL PROCEDURES SHALL BE IN PLACE PRIOR TO BEGINNING GRADING ACTIVITIES.

26. CONSTRUCTION ACCESS TO THE SITE SHALL BE LIMITED TO THE APPROVED TEMPORARY CONSTRUCTION ENTRANCE(S) AS SHOWN ON SHEET C6.0.

27. TEMPORARY CONSTRUCTION ENTRANCE SHALL HAVE SHOT ROCK FOR ITS SURFACE.

28. EROSION CONTROL DEVICES SHALL BE MAINTAINED DURING THE WHOLE CONSTRUCTION PERIOD BY THE CONTRACTOR.

29. CONTRACTOR SHALL PROTECT ANY STORM INLETS FROM SEDIMENT THAT TAKE STORM WATER FROM THE AREA OF CONSTRUCTION.

30. ALL DISTURBED AREAS SHALL BE STABILIZED IN ACCORDANCE WITH THE APPROVED EROSION CONTROL PLAN.

OWNER / APPLICANT / DEVELOPER:

CITY OF NIXA, MISSOURI
POLICE DEPARTMENT
715 W. MT. VERNON ST.
NIXA, MISSOURI 65714
CONTACT: JIMMY LILES
NIXA CITY ADMINISTRATOR

ENGINEER:

OLSSON, INC.
RICKY HAASE
550 ST. LOUIS STREET
SPRINGFIELD, MO 65806
PH: (417) 890-8802
EMAIL: rhaase@olsson.com

SURVEYOR:

OLSSON, INC.
DAVID DRUMM
550 ST. LOUIS STREET
SPRINGFIELD, MO 65806
PH: (417) 890-8802
EMAIL: ddrumm@olsson.com

UTILITY COMPANIES:

DIRECTOR UTILITIES & PUBLIC WORKS
CITY OF NIXA
715 W. MT. VERNON
NIXA, MO 65714
CONTACT:DOUG COLVIN
EMAIL: dcolvin@nixa.com
CONTACT: TRAVIS COSSEY
EMAIL: tcossey@nixa.com
PH: (417) 725-2353

WATER QUALITY SUPERINTENDENT
CONTACT: JASON STUTESMUN
EMAIL:jstutesmun@nixa.com
PH: (417) 725-2353

ELECTRIC SUPERINTENDENT
CONTACT: BRIAN DENNEY
PH: (417) 725-2353
EMAIL: bdenney@nixa.com

FIBER OPTICS/TELEPHONE
AT&T
600 ST. LOUIS STREET
SPRINGFIELD, MO 65806
CONTACT: ADAM MOON
PH: (417) 836-2146
EMAIL: am8421@att.com

GAS
SPIRE ENERGY
DUSTIN BORLAND
520 E. 5th STREET
JOPLIN, MO 64801
PH: OFFICE (417) 626-4837
PH: MOBILE (417) 317-2004
EMAIL: Dustin.Borland@spireenergy.com

N

0' 25' 50' 100'
SCALE IN FEET

BENCHMARKS:

BENCHMARK #1 - TOP NUT OF FIRE HYDRANT 63' E. OF EXIST. EASTERN PROPERTY LINE & 124' SOUTH OF NORTHERN PROPERTY LINE
N: 442855.34 E: 1400549.85
ELEVATION: 1288.78

MISSOURI 811

olsson
550 East St. Louis Street
Springfield, MO 65806
olsson.com
TEL 417.890.8802
FAX 417.890.8805
Olsson, Inc. Engineering MO State Cert. of Authority #001592
Olsson, Inc. Landscape Architecture MO State Cert. of Authority #2005000285

F:\2024\00501-010\00\024-00531\40-Design\AutoCAD\Final Plans\Sheets\SDN\C_GEN01_02400531.dwg
DATE: Jun 10, 2025 10:52am USER: lallinger

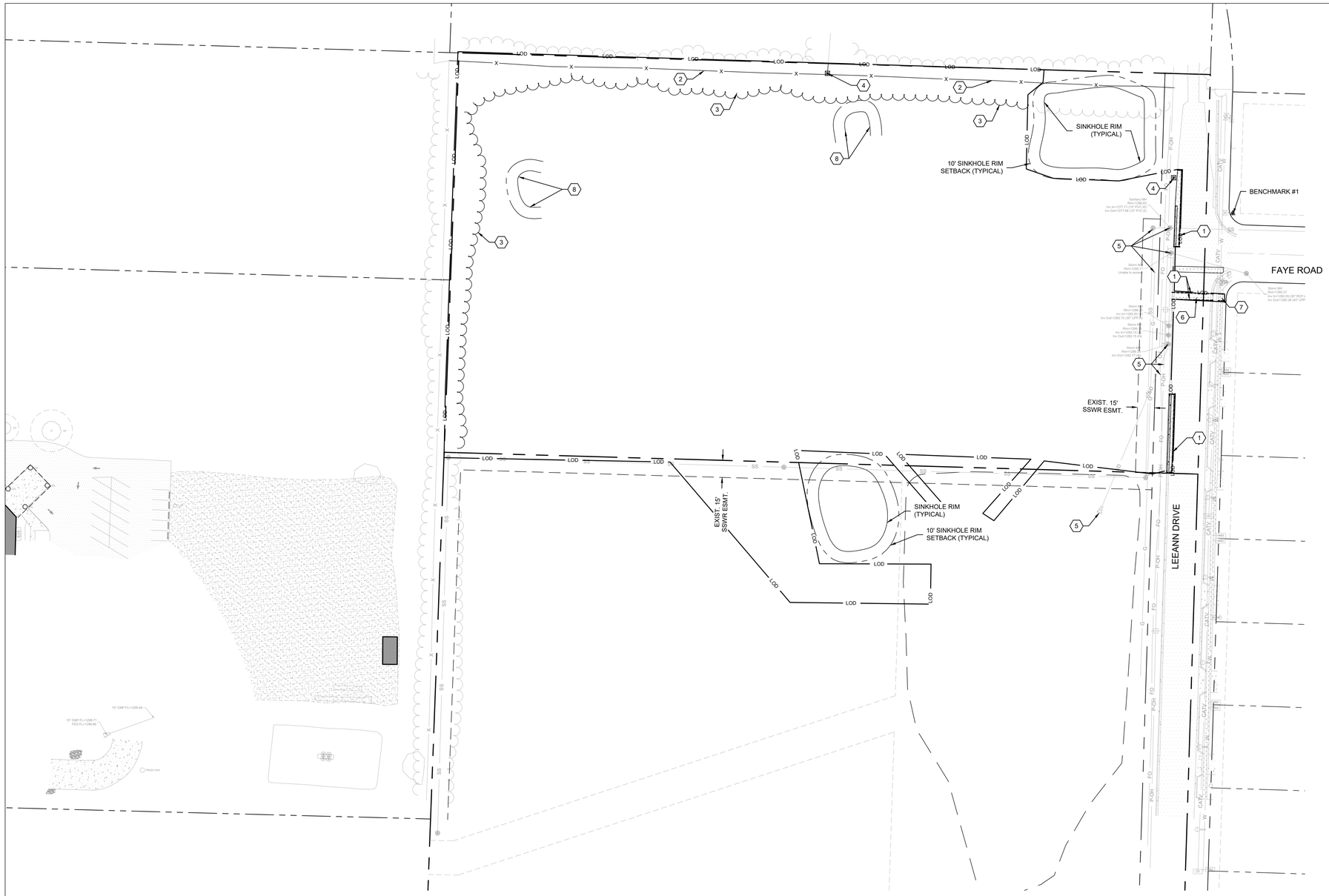

DEMOLITION NOTES:

1. ALL DEMOLITION IS TO BE PERFORMED IN ACCORDANCE WITH ALL APPLICABLE CITY, COUNTY, STATE AND/OR GOVERNING BODY'S STANDARDS.

2. THE CONTRACTOR IS RESPONSIBLE FOR OBTAINING ALL PERMITS ASSOCIATED WITH THE DEMOLITION WORK AS DESCRIBED & SHOWN ON THESE PLANS.

3. THE EXISTING UTILITY LOCATIONS SHOWN ON THE PLANS ARE APPROXIMATE AND MAY NOT INCLUDE ALL LINES PRESENT. THE CONTRACTOR SHALL BE RESPONSIBLE TO CALL "811", AND COORDINATE FIELD LOCATION OF EXISTING UNDERGROUND UTILITIES PRIOR TO BEGINNING DEMOLITION ACTIVITIES. !!KNOW WHAT'S BELOW. CALL BEFORE YOU DIG!!

4. CONTRACTOR SHALL COORDINATE WITH WATER, GAS, ELECTRIC, TELEPHONE/FIBER, CABLE, AND SANITARY SEWER PROVIDERS TO TERMINATE ALL EXISTING SERVICES TO BUILDINGS MARKED FOR DEMOLITION ON THESE PLANS. CONTRACTOR SHALL VERIFY WITH UTILITY PROVIDERS THAT SERVICES ARE DISCONNECTED PRIOR TO ANY REMOVAL OF INTERNAL SERVICE LINES.

5. THE DEMOLITION PLAN AND EXISTING CONDITIONS SHOWN ARE APPROXIMATE. CONTRACTOR SHALL INSPECT AND FIELD VERIFY THE EXISTING SITE CONDITIONS TO BECOME ACQUAINTED WITH ALL EXISTING CONDITIONS WHICH EFFECT ANY AND ALL WORK ASSOCIATED WITH THE DEMOLITION PLANS.

6. ALL EXISTING BUILDING RELATED FEATURES NOT SHOWN ON THIS PLAN SHALL BE COORDINATE WITH ALL OTHER PLANS ASSOCIATED WITH THIS PROJECT. ALL CONCRETE OR ASPHALT PAVEMENT, CURB & GUTTER, RETAINING WALLS AND MISCELLANEOUS STRUCTURES INCLUDING BUT NOT LIMITED TO LIGHT POLES AND BASES, AND MISCELLANEOUS DEBRIS SHALL BE DEMOLISHED AND REMOVED FROM THE SITE AND SHALL BE DISPOSED OF OFF-SITE AT CONTRACTORS EXPENSE TO AN APPROVED DUMP SITE, UNLESS OTHERWISE NOTED.

7. IN THE EVENT THE CONTRACTOR ENCOUNTERS ON THE SITE MATERIAL REASONABLY BELIEVED TO BE ASBESTOS, LEAD-BASED PAINT, OR ANY OTHER HAZARDOUS MATERIAL, SAID MATERIAL SHALL BE REMOVED AND DISPOSED OF BY THE CONTRACTOR IN ACCORDANCE WITH CITY, COUNTY, STATE AND FEDERAL REGULATIONS.

8. DEBRIS SHALL NOT BE BURIED ON SITE. ALL UNSUITABLE MATERIAL AND DEBRIS SHALL BE REMOVED FROM THE SITE AND PROPERLY DISPOSED OFF-SITE IN ACCORDANCE WITH ALL CITY, STATE, COUNTY & FEDERAL LAWS AND ORDINANCES.

9. IF EXISTING UN-CAPPED WATER WELLS ARE DISCOVERED ON-SITE, CONTRACTOR SHALL COORDINATE WITH AN AUTHORIZED COMPANY TO HAVE WELLS PLUGGED AND CAPPED IN ACCORDANCE WITH ALL CITY, COUNTY, STATE AND FEDERAL LAWS AND ORDINANCES.

10. IF EXISTING SEPTIC SYSTEMS ARE DISCOVERED ON-SITE, CONTRACTOR SHALL COORDINATE WITH A SEPTIC HAULER TO PUMP ANY REMAINING WASTEWATER AND SLUDGE FROM ALL THE TANKS IN THE SYSTEM. CONTRACTOR SHALL REMOVE EXISTING SEPTIC TANKS, LATERAL FIELDS AND ALL OTHER PARTS OF THE SYSTEM IN ACCORDANCE WITH CITY, COUNTY, STATE AND FEDERAL LAWS AND ORDINANCES.

11. ANY AREA DISTURBED BY DEMOLITION THAT WILL NOT BE DISTURBED IN PROPOSED GRADING ACTIVITIES SHOWN ON THESE PLANS SHALL HAVE TOPSOIL PLACED, SEEDED AND MULCHED ACCORDING TO THE CONTRACT SPECIFICATIONS.

12. ALL WORK WITHIN CITY RIGHT-OF-WAY WILL REQUIRE AN EXCAVATION PERMIT. IT IS THE CONTRACTORS RESPONSIBILITY TO OBTAIN THIS PERMIT.

13. ALL FIBER LINES AND STRUCTURES SHALL BE PROTECTED IN PLACE UNLESS NOTED OTHERWISE.

DEMOLITION KEYNOTES:

1. CONTRACTOR SHALL SAWCUT & REMOVE EXISTING ASPHALT OR CONCRETE PAVEMENT AS NECESSARY TO PROVIDE A SMOOTH EDGE BETWEEN NEW & EXISTING PAVEMENT. EXTENTS OF REMOVAL SHALL ACCOMMODATE NEW CONSTRUCTION SHOWN ON THESE PLANS. CONCRETE PAVEMENT REMOVAL SHALL BE TO THE NEAREST JOINT.
2. EXIST. BARBWIRE FENCE TO BE REMOVED
3. EXISTING TREE LINE TO BE REMOVED WITHIN LIMITS OF DISTURBANCE
4. EXISTING SITE SIGNS AND POSTS TO BE REMOVED. SIGNS SHALL BE SALVAGED TO THE OWNER FOR POTENTIAL RE-USE ONSITE AT THEIR DISCRETION.
5. CONTRACTOR SHALL USE CAUTION WHILE WORKING AROUND EXISTING UTILITES.
6. EXIST. ASPHALT PAVEMENT TO BE REMOVED & REPLACED AS NECESSARY TO ACCOMMODATE CONSTRUCTION OF NEW WATER SERVICE AND CONNECTION TO EXISTING WATER MAIN.
7. EXIST. CONCRETE SIDEWALK TO BE REMOVED
8. EXIST. SINKHOLES TO BE FILLED AND STABILIZED. CONTRACTOR TO REFER TO SINKHOLE REPORT GENERATED FOR THE CITY OF NIXA BY GREDELL ENGINEERING RESOURCES, INC. IN JULY 2024 FOR INFORMATION

LEGEND

- PROPERTY LINE
- LOD — LIMITS OF CONSTRUCTION/DEMOLITION
- SAWCUT/REMOVAL LINE
- EXISTING ASPHALT PAVEMENT TO BE REMOVED
- EXISTING CONCRETE CURB AND GUTTER TO BE REMOVED
- EXISTING CONCRETE SIDEWALK TO BE REMOVED

N

0' 20' 40' 80'
SCALE IN FEET

BENCHMARKS:

BENCHMARK #1 - TOP NUT OF FIRE HYDRANT 63' E. OF EXIST. EASTERN PROPERTY LINE & 124' SOUTH OF NORTHERN PROPERTY LINE
N: 442855.34 E: 1400549.85
ELEVATION: 1288.78

MISSOURI 811

olsson
550 East St. Louis Street
Springfield, MO 65806
olsson.com
TEL 417.890.8802
FAX 417.890.8805
Olsson, Inc. Engineering MO State Cert. of Authority #001592
Olsson, Inc. Landscape Architecture MO State Cert. of Authority #2005000285

NIXA POLICE DEPARTMENT

305 N. LEEANN DRIVE
NIXA, MO 65714

INSIGHT DESIGN IDeA ARCHITECTS
112 S. Main St., Nixa, MO 65714 Ph: 417-724-8553
CJD Engineering | Energy | Innovation
olsson
METTEMEYER ENGINEERING
Chiodini ARCHITECTS
Architecture / Interior Design / Graphics
1401 S. Brentwood Blvd. | Suite 575 | St. Louis, Missouri 63144
314-725-0881 | info@chiodini.com

Reissue Date

Professional of Record

STATE OF MISSOURI
RICKY HAASS
NUMBER
PE-2010017828
06/11/2025
PROFESSIONAL ENGINEER

DATE 06/11/2025

Copyright 2024 ©
These prints are the property of the architect and shall be usedonly for the project referenced above

Drawn by
BWS

Project #
024-00531

Date
2025.06.11

Drawing Title:
DEMOLITION PLAN

Sheet:
C1.1

F:\2024\00531.01\00\024-00531\140-Design\AutoCAD\Final Plans\Sheets\SD\NC_DEM01_02400531.dwg
DATE: Jun 10, 2025 10:54am USER: bettinger

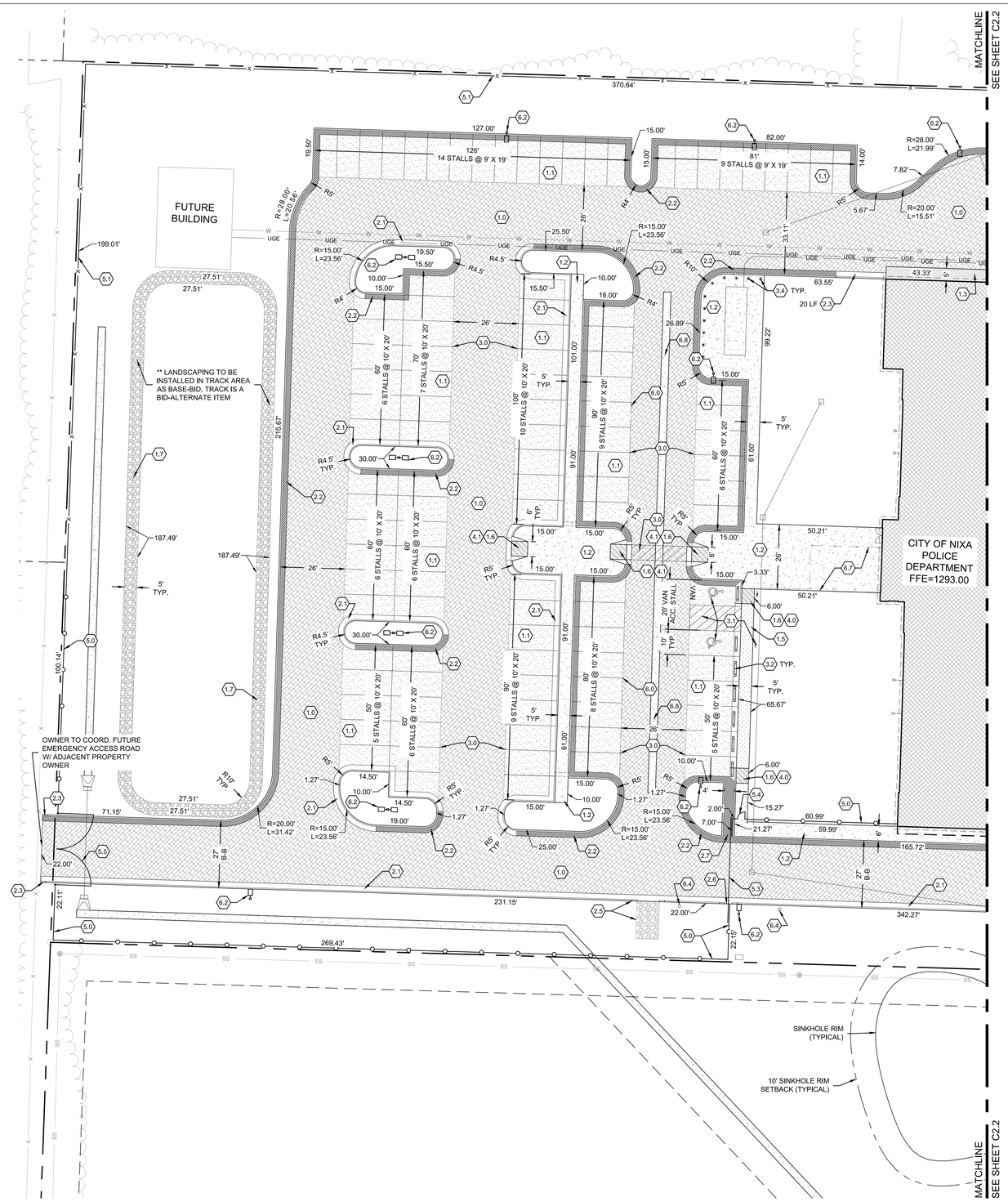

KEYNOTES:

** DENOTES BID-ALTERNATE ITEMS

- 1.0 INSTALL HEAVY DUTY ASPHALT PAVEMENT (SEE DETAILS SHEET C8.0)
- 1.1 INSTALL LIGHT DUTY ASPHALT PAVEMENT (SEE DETAILS SHEET C8.0)
- 1.2 INSTALL CONCRETE SIDEWALK (SEE DETAILS SHEET C8.0)
- 1.3 INSTALL STANDARD DUTY CONCRETE PAVEMENT (SEE DETAILS SHEET C8.0)
- 1.4 INSTALL HEAVY DUTY CONCRETE PAVEMENT (SEE DETAILS SHEET C8.0)
- 1.5 INSTALL CONCRETE SIDEWALK AND BANDING FLUSH WITH PAVEMENT (SEE DETAILS SHEET C8.0)
- 1.6 CONSTRUCT SIDEWALK RAMP - SLOPE AT 8.33% MAX. (SEE DETAILS SHEET C8.0)
- 1.7 ** CONSTRUCT WALK-ABLE ASPHALT 1/10 MILE TRACK (SEE DETAIL SHEET C8.1)
- 1.8 ASPHALT STREET REPAIR SECTION (SEE DETAIL SHEET C8.0)
- 2.0 CONTRACTOR SHALL SAW CUT EXISTING ASPHALT TO PROVIDE CLEAN EDGE FOR SMOOTH TRANSITION BETWEEN NEW & EXISTING ASPHALT
- 2.1 CONSTRUCT STANDARD CURB & GUTTER (CONTRACTOR TO PROVIDE 5' TRANSITION BETWEEN CURB TYPES)(SEE DETAIL SHEET C8.0)
- 2.2 CONSTRUCT "DRY" CURB & GUTTER (CONTRACTOR TO PROVIDE 5' TRANSITION BETWEEN CURB TYPES)(SEE DETAIL SHEET C8.0)
- 2.3 PROVIDE 2' CURB TRANSITION TO PAVEMENT (SEE DETAIL SHEET C8.0)
- 2.4 PROVIDE CURB TRANSITION TO PAVEMENT (SEE PLAN FOR TRANSITION LENGTH) (SEE SHEET C3.1-C3.2 FOR SPOT ELEVATIONS)
- 2.5 CONSTRUCT 9' CURB DRAINAGE OPENING W/ 2' CURB TRANSITIONS ON EITHER SIDE. INSTALL 9' X 15' TYPE "L" RIPRAP PAD. (SEE DETAIL SHEET C8.1)
- 2.6 CONSTRUCT 3' CURB DRAINAGE OPENING W/ 2' CURB TRANSITIONS ON EITHER SIDE W/O RIPRAP PAD (SEE DETAIL SHEET C8.1)
- 2.7 CONSTRUCT DUAL "DRY" CURB AND GUTTER VALLEY (SEE DETAIL SHEET C8.1)(SEE SHEET C3.1-C3.2 FOR SPOT ELEVATIONS)
- 3.0 PAVEMENT MARKING AND 4" SINGLE SOLID WHITE PARKING STRIPE (TYP.) (SEE SHEET C2.1 FOR PAVEMENT MARKING NOTES)
- 3.1 ADA ACCESSIBLE STALL, STRIPING, & POLE MOUNTED SIGNAGE (SEE DETAILS SHEET C8.0)
- 3.2 INSTALL CONCRETE WHEEL STOPS (SEE DETAILS SHEET C8.0)
- 3.3 INSTALL ADA DETECTABLE TRUNCATED DOMES (SEE DETAIL SHEET C8.0)
- 3.4 INSTALL CONCRETE BOLLARD (SEE ARCH. SHEETS FOR DETAIL)
- 4.0 INSTALL STANDARD CURB AND WALK RAMP TRANSITION (SEE DETAIL SHEET C8.1)
- 4.1 INSTALL TYPE 4 SIDEWALK RAMP (SEE DETAIL SHEET C8.1)
- 5.0 INSTALL 6' TALL AMERISTAR MONTAGE II FENCING. INSTALL PER MANUFACTURER'S RECOMMENDATIONS
- 5.1 INSTALL 6' TALL CHAINLINK FENCE W/ VINYL SIDING (SEE DETAIL SHEET C8.1) COORD. W/ ARCH. FOR VINYL COLOR. CONTRACTOR TO INSTALL FENCE ALONG PROPERTY LINE AND COORD. W/ NEIGHBORING PROPERTY OWNERS AS NEEDED
- 5.2 INSTALL 14' WIDE AMERISTAR MONTAGE PLUS MAJESTIC SWING GATE. INSTALL PER MANUFACTURER'S RECOMMENDATIONS. ALL ASSOCIATED GATE AND FENCE FOUNDATIONS TO BE INSTALLED PER MANUFACTURER'S RECOMMENDATIONS
- 5.3 INSTALL 20' WIDE AMERISTAR 2TTMX07214 DUAL SLIDING FENCE GATE. INSTALL PER MANUFACTURER'S RECOMMENDATIONS. ALL ASSOCIATED GATE AND FENCE FOUNDATIONS TO BE INSTALLED PER MANUFACTURER'S RECOMMENDATIONS
- 5.4 INSTALL 3' WIDE AMERISTAR MAN GATE. INSTALL PER MANUFACTURER'S RECOMMENDATIONS
- 5.5 INSTALL 26' MONTAGE II MANUAL DOUBLE SWING GATE W/ KNOX BOX. INSTALL PER MANUFACTURER'S RECOMMENDATIONS. ALL ASSOCIATED GATE AND FENCE FOUNDATIONS TO BE INSTALLED PER MANUFACTURER'S RECOMMENDATIONS
- 6.0 ** INSTALL COVERED PARKING (SEE ARCH. AND STRUCTURAL SHEETS FOR DETAIL)
- 6.1 INSTALL MONUMENT SIGN (SEE ARCH. SHEETS FOR DETAIL)
- 6.2 SITE LIGHTING (SEE MEP PLANS)
- 6.3 INSTALL CONCRETE TRASH ENCLOSURE (SEE ARCH. SHEETS FOR DETAIL)
- 6.4 INSTALL GATE CONTROL KEYPAD W/ EMERGENCY KNOX LOCK MANUAL KEY OPENER. KEYPAD PEDESTALS TO BE INSTALLED 20' OFFSET FROM ASSOCIATED GATE. INSTALL CONTROLLER AND FOUNDATION PER MANUFACTURER'S RECOMMENDATIONS
- 6.5 INSTALL FLAG POLE PEDESTAL (SEE ARCH. SHEETS FOR MORE INFORMATION)
- 6.6 INSTALL "AUTHORIZED PERSONNEL ONLY" POLE MOUNTED SIGNAGE. (SEE ARCH. SPECS FOR MORE INFORMATION)
- 6.7 ** INSTALL COVERED PATIO (SEE ARCH. AND STRUCTURAL SHEETS FOR DETAIL)
- 6.8 INSTALL 200 L.F. CONCRETE VALLEY GUTTER (SEE DETAIL SHEET C8.1)

PAVEMENT MARKING NOTES:

1. DO NOT APPLY PAVEMENT MARKING PAINT UNTIL LAYOUT, COLORS AND PLACEMENT HAVE BEEN VERIFIED WITH THE ARCHITECT.

2. ALLOW CONCRETE PAVING TO AGE FOR 28 DAYS BEFORE MARKING.

3. SWEEP AND CLEAN SURFACE.

4. DETAILS NOT SHOWN SHALL BE IN CONFORMITY WITH THE STATE STANDARDS FOR TRAFFIC CONTROL DEVICES FOR STREETS AND HIGHWAYS, AND SIMILAR REQUIREMENTS ESTABLISHED BY THE U.S. DEPARTMENT OF TRANSPORTATION, FEDERAL HIGHWAY ADMINISTRATION.

5. ALL PARKING LOT STRIPING SHALL BE SINGLE LINE 4" WIDE AS PER THE SITE PLANS.

6. PAINT FOR MARKING PAVEMENT SHALL CONFORM TO FEDERAL HIGHWAY MARKING STANDARDS. USE SHERWIN WILLIAMS PROFESSIONAL FAST DRY ACRYLIC LATEX TRAFFIC MARKING PAINT OR EQUAL, USE WHITE, BLUE OR YELLOW, WHERE APPROPRIATE. UNLESS OTHERWISE DIRECTED, USE THE FOLLOWING:
   - A. BLACKTOP OR BITUMINOUS ASPHALT PAVING: USE WHITE COLOR.
   - B. PORTLAND CEMENT CONCRETE PAVING: USE WHITE COLOR.
   - C. HANDICAPPED ACCESSIBLE PARKING AND ENTRYWAYS: USE BLUE COLOR.
   - D. PROVIDE PAINTED CURBS AT FIRE LANE DESIGNATIONS PER FIRE MARSHAL REQUIREMENTS.

7. APPLY ALL MARKINGS USING APPROVED MECHANICAL EQUIPMENT (WITH PROVISIONS FOR CONSTANT AGITATION OF PAINT), CAPABLE OF APPLYING THE MARKING WIDTHS AS SHOWN. PROVIDE A MINIMUM WET FILM THICKNESS OF 15 MILS. USE PNEUMATIC SPRAY GUNS FOR HAND APPLICATION OF PAINT. ALL PAINTING EQUIPMENT AND OPERATIONS SHALL BE UNDER THE CONTROL OF EXPERIENCED TECHNICIANS THOROUGHLY FAMILIAR WITH EQUIPMENT AND MATERIALS AND MARKING LAYOUTS.

8. DETAIL PAVEMENT MARKINGS SHALL BE THAT MARKING, EXCLUSIVE OF ACTUAL TRAFFIC LANE MARKING, AT EXIT AND ENTRANCE ISLANDS AND TURNOUTS, ON CURBS, AT CROSSWALKS, AT PARKING BAYS AND AT SUCH OTHER LOCATIONS AS SHOWN. HANDICAPPED PARKING SPACES SHALL BE MARKED BY THE INTERNATIONAL HANDICAPPED SYMBOL AT INDICATED PARKING SPACES. USE A SUITABLE TEMPLATE THAT WILL PROVIDE A PAVEMENT MARKING WITH TRUE, SHARP EDGES AND ENDS.

LEGEND

- PROPERTY LINE
- RIGHT-OF-WAY LINE
- EASEMENT LINE

N

0' 10' 20' 40'
SCALE IN FEET

BENCHMARKS:

BENCHMARK #1 - TOP NUT OF FIRE HYDRANT 63' E. OF EXIST. EASTERN PROPERTY LINE & 124' SOUTH OF NORTHERN PROPERTY LINE
N: 442855.34 E: 1400549.85
ELEVATION: 1288.78

MISSOURI 811

olsson
Olsson, Inc. Engineering MO State Cert. of Authority #001592
Olsson, Inc. Landscape Architecture MO State Cert. of Authority #2005000285

550 East St. Louis Street
Springfield, MO 65806
olsson.com
TEL 417.890.8802
FAX 417.890.8805

NIXA POLICE DEPARTMENT

305 N. LEEANN DRIVE
NIXA, MO 65714

INSIGHT DESIGN IDeA ARCHITECTS
112 S. Main St., Nixa, MO 65714 Ph: 417-724-8553

CJD Engineering | Energy | Innovation

olsson

METTEMEYER ENGINEERING

Chrisdine ARCHITECTS
Architecture / Interior Design / Graphics
14015 S. Brentwood Blvd. - Suite 215 | St. Louis, Missouri 63144
314-355-5080 | arch@chrisdine.com

Reissue Date

Professional of Record

STATE OF MISSOURI
RICKY HAASE
NUMBER
PE-2010017828
06/11/2025
PROFESSIONAL ENGINEER

DATE 06/11/2025

Copyright 2024 ©
These prints are the property of the architect and shall be usedonly for the project referenced above

Drawn by
BWS

Project #
024-00531

Date
2025.06.11

Drawing Title:
WEST SITE PLAN

Sheet:
C2.1

F:\2024\00501-01000\024-00531\140-Design\AutoCAD\Final Plans\Sheets\SDNKC_SIT01_02400531.dwg
DATE: Jun 10, 2025 10:56am USER: bstringer

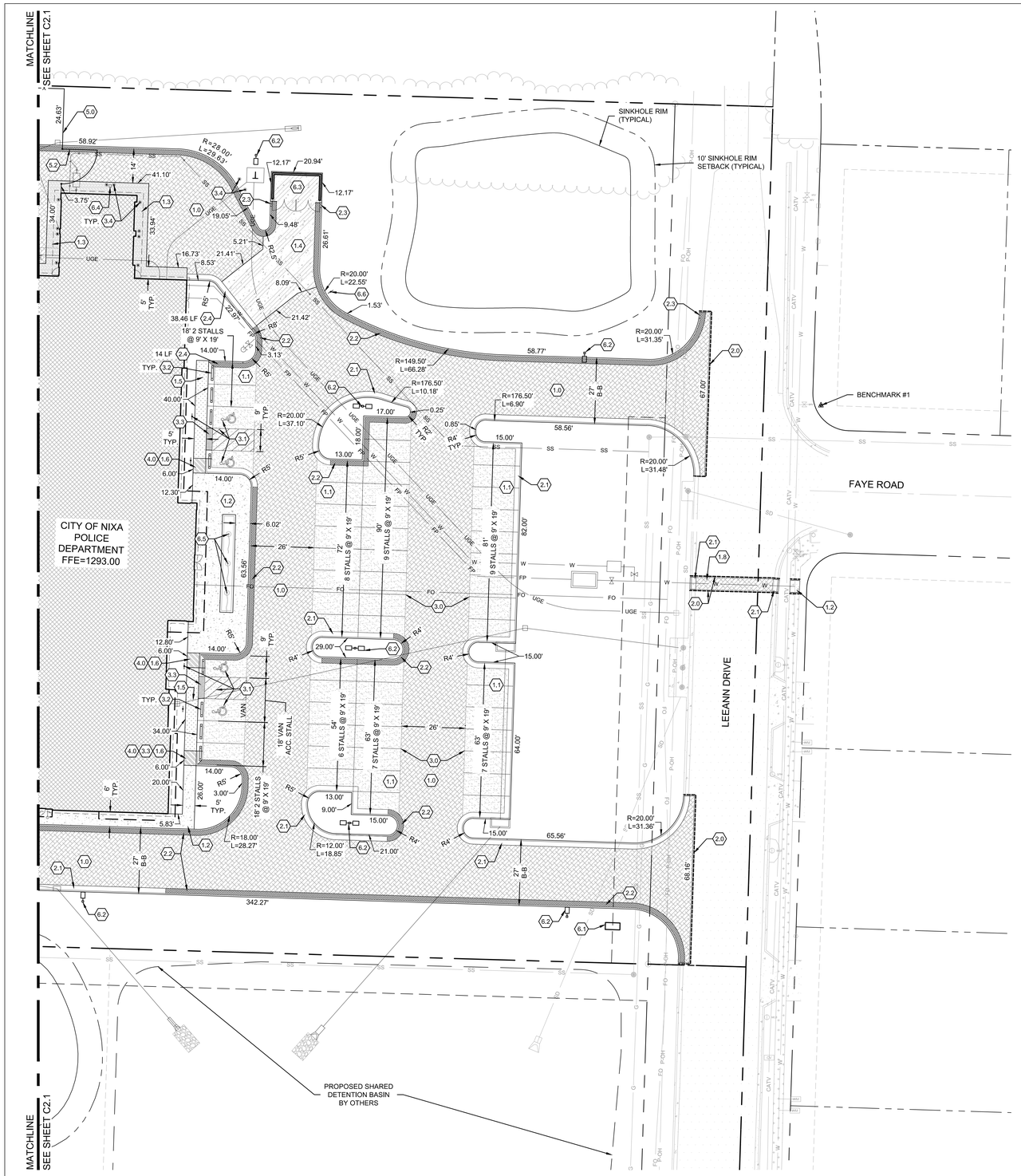

KEYNOTES:

** DENOTES BID-ALTERNATE ITEMS

- 1.0 INSTALL HEAVY DUTY ASPHALT PAVEMENT (SEE DETAILS SHEET C8.0)
- 1.1 INSTALL LIGHT DUTY ASPHALT PAVEMENT (SEE DETAILS SHEET C8.0)
- 1.2 INSTALL CONCRETE SIDEWALK (SEE DETAILS SHEET C8.0)
- 1.3 INSTALL STANDARD DUTY CONCRETE PAVEMENT (SEE DETAILS SHEET C8.0)
- 1.4 INSTALL HEAVY DUTY CONCRETE PAVEMENT (SEE DETAILS SHEET C8.0)
- 1.5 INSTALL CONCRETE SIDEWALK AND BANDING FLUSH WITH PAVEMENT (SEE DETAILS SHEET C8.0)
- 1.6 CONSTRUCT SIDEWALK RAMP - SLOPE AT 8.33% MAX. (SEE DETAILS SHEET C8.0)
- 1.7 ** CONSTRUCT WALK-ABLE ASPHALT 1/10 MILE TRACK (SEE DETAIL SHEET C8.1)
- 1.8 ASPHALT STREET REPAIR SECTION (SEE DETAIL SHEET C8.0)
- 2.0 CONTRACTOR SHALL SAW CUT EXISTING ASPHALT TO PROVIDE CLEAN EDGE FOR SMOOTH TRANSITION BETWEEN NEW & EXISTING ASPHALT
- 2.1 CONSTRUCT STANDARD CURB & GUTTER (CONTRACTOR TO PROVIDE 5' TRANSITION BETWEEN CURB TYPES)(SEE DETAIL SHEET C8.0)
- 2.2 CONSTRUCT "DRY" CURB & GUTTER (CONTRACTOR TO PROVIDE 5' TRANSITION BETWEEN CURB TYPES)(SEE DETAIL SHEET C8.0)
- 2.3 PROVIDE 2' CURB TRANSITION TO PAVEMENT (SEE DETAIL SHEET C8.0)
- 2.4 PROVIDE CURB TRANSITION TO PAVEMENT (SEE PLAN FOR TRANSITION LENGTH) (SEE SHEET C3.1-C3.2 FOR SPOT ELEVATIONS)
- 2.5 CONSTRUCT 9' CURB DRAINAGE OPENING W/ 2' CURB TRANSITIONS ON EITHER SIDE. INSTALL 9' X 15' TYPE "L" RIPRAP PAD. (SEE DETAIL SHEET C8.1)
- 2.6 CONSTRUCT 3' CURB DRAINAGE OPENING W/ 2' CURB TRANSITIONS ON EITHER SIDE W/O RIPRAP PAD (SEE DETAIL SHEET C8.1)
- 2.7 CONSTRUCT DUAL "DRY" CURB AND GUTTER VALLEY (SEE DETAIL SHEET C8.1)(SEE SHEET C3.1-C3.2 FOR SPOT ELEVATIONS)
- 3.0 PAVEMENT MARKING AND 4" SINGLE SOLID WHITE PARKING STRIPE (TYP.) (SEE SHEET C2.1 FOR PAVEMENT MARKING NOTES)
- 3.1 ADA ACCESSIBLE STALL, STRIPING, & POLE MOUNTED SIGNAGE (SEE DETAILS SHEET C8.0)
- 3.2 INSTALL CONCRETE WHEEL STOPS (SEE DETAILS SHEET C8.0)
- 3.3 INSTALL ADA DETECTABLE TRUNCATED DOMES (SEE DETAIL SHEET C8.0)
- 3.4 INSTALL CONCRETE BOLLARD (SEE ARCH. SHEETS FOR DETAIL)
- 4.0 INSTALL STANDARD CURB AND WALK RAMP TRANSITION (SEE DETAIL SHEET C8.1)
- 4.1 INSTALL TYPE 4 SIDEWALK RAMP (SEE DETAIL SHEET C8.1)
- 5.0 INSTALL 6' TALL AMERISTAR MONTAGE II FENCING. INSTALL PER MANUFACTURER'S RECOMMENDATIONS
- 5.1 INSTALL 6' TALL CHAINLINK FENCE W/ VINYL SIDING (SEE DETAIL SHEET C8.1) COORD. W/ ARCH. FOR VINYL COLOR. CONTRACTOR TO INSTALL FENCE ALONG PROPERTY LINE AND COORD. W/ NEIGHBORING PROPERTY OWNERS AS NEEDED
- 5.2 INSTALL 14' WIDE AMERISTAR MONTAGE PLUS MAJESTIC SWING GATE. INSTALL PER MANUFACTURER'S RECOMMENDATIONS. ALL ASSOCIATED GATE AND FENCE FOUNDATIONS TO BE INSTALLED PER MANUFACTURER'S RECOMMENDATIONS
- 5.3 INSTALL 20' WIDE AMERISTAR 2TTMX07214 DUAL SLIDING FENCE GATE. INSTALL PER MANUFACTURER'S RECOMMENDATIONS. ALL ASSOCIATED GATE AND FENCE FOUNDATIONS TO BE INSTALLED PER MANUFACTURER'S RECOMMENDATIONS
- 5.4 INSTALL 3' WIDE AMERISTAR MAN GATE. INSTALL PER MANUFACTURER'S RECOMMENDATIONS
- 5.5 INSTALL 26' MONTAGE II MANUAL DOUBLE SWING GATE W/ KNOX BOX. INSTALL PER MANUFACTURER'S RECOMMENDATIONS. ALL ASSOCIATED GATE AND FENCE FOUNDATIONS TO BE INSTALLED PER MANUFACTURER'S RECOMMENDATIONS
- 6.0 ** INSTALL COVERED PARKING (SEE ARCH. AND STRUCTURAL SHEETS FOR DETAIL)
- 6.1 INSTALL MONUMENT SIGN (SEE ARCH. SHEETS FOR DETAIL)
- 6.2 SITE LIGHTING (SEE MEP PLANS)
- 6.3 INSTALL CONCRETE TRASH ENCLOSURE (SEE ARCH. SHEETS FOR DETAIL)
- 6.4 INSTALL GATE CONTROL KEYPAD W/ EMERGENCY KNOX LOCK MANUAL KEY OPENER. KEYPAD PEDESTALS TO BE INSTALLED 20' OFFSET FROM ASSOCIATED GATE. INSTALL CONTROLLER AND FOUNDATION PER MANUFACTURER'S RECOMMENDATIONS
- 6.5 INSTALL FLAG POLE PEDESTAL (SEE ARCH. SHEETS FOR MORE INFORMATION)
- 6.6 INSTALL "AUTHORIZED PERSONNEL ONLY" POLE MOUNTED SIGNAGE. (SEE ARCH. SPECS FOR MORE INFORMATION)
- 6.7 ** INSTALL COVERED PATIO (SEE ARCH. AND STRUCTURAL SHEETS FOR DETAIL)
- 6.8 INSTALL 200 L.F. CONCRETE VALLEY GUTTER (SEE DETAIL SHEET C8.1)

LEGEND

- PROPERTY LINE
- RIGHT-OF-WAY LINE
- EASEMENT LINE

N

0' 10' 20' 40'
SCALE IN FEET

BENCHMARKS:

BENCHMARK #1 - TOP NUT OF FIRE HYDRANT 63' E. OF EXIST. EASTERN PROPERTY LINE & 124' SOUTH OF NORTHERN PROPERTY LINE
N: 442855.34 E: 1400549.85
ELEVATION: 1288.78

550 East St. Louis Street
Springfield, MO 65806
olsson.com
TEL 417.890.8802
FAX 417.890.8805

Olsson, Inc. Engineering MO State Cert. of Authority #001592
Olsson, Inc. Landscape Architecture MO State Cert. of Authority #2005000285

NIXA POLICE DEPARTMENT

305 N. LEEANN DRIVE
NIXA, MO 65714

INSIGHT DESIGN IDeA ARCHITECTS
112 S. Main St., Nixa, MO 65714 Ph: 417-724-8553

CJD Engineering | Energy | Innovation

olsson

METTEMEYER ENGINEERING

Christiansen ARCHITECTS
Architecture / Interior Design / Graphics
1401 S. Brentwood Blvd. - Suite 570 | St. Louis, Missouri 63144
314-725-0880 | ian@christiansen.com

Reissue Date

Professional of Record

STATE OF MISSOURI
RICKY HAAS
PE-2019017828
06/11/2025
PROFESSIONAL ENGINEER

DATE 06/11/2025

Copyright 2024 ©
These prints are the property of the architect and shall be usedonly for the project referenced above

Drawn by
BWS

Project #
024-00531

Date
2025.06.11

Drawing Title:
EAST SITE PLAN

Sheet:
C2.2

F:\2024\00501-01000\024-00531\40-Design\AutoCAD\Final Plans\Sheets\SDNCC_SIT01_02400531.dwg
DATE: Jun 10, 2025 10:37am USER: bstringer

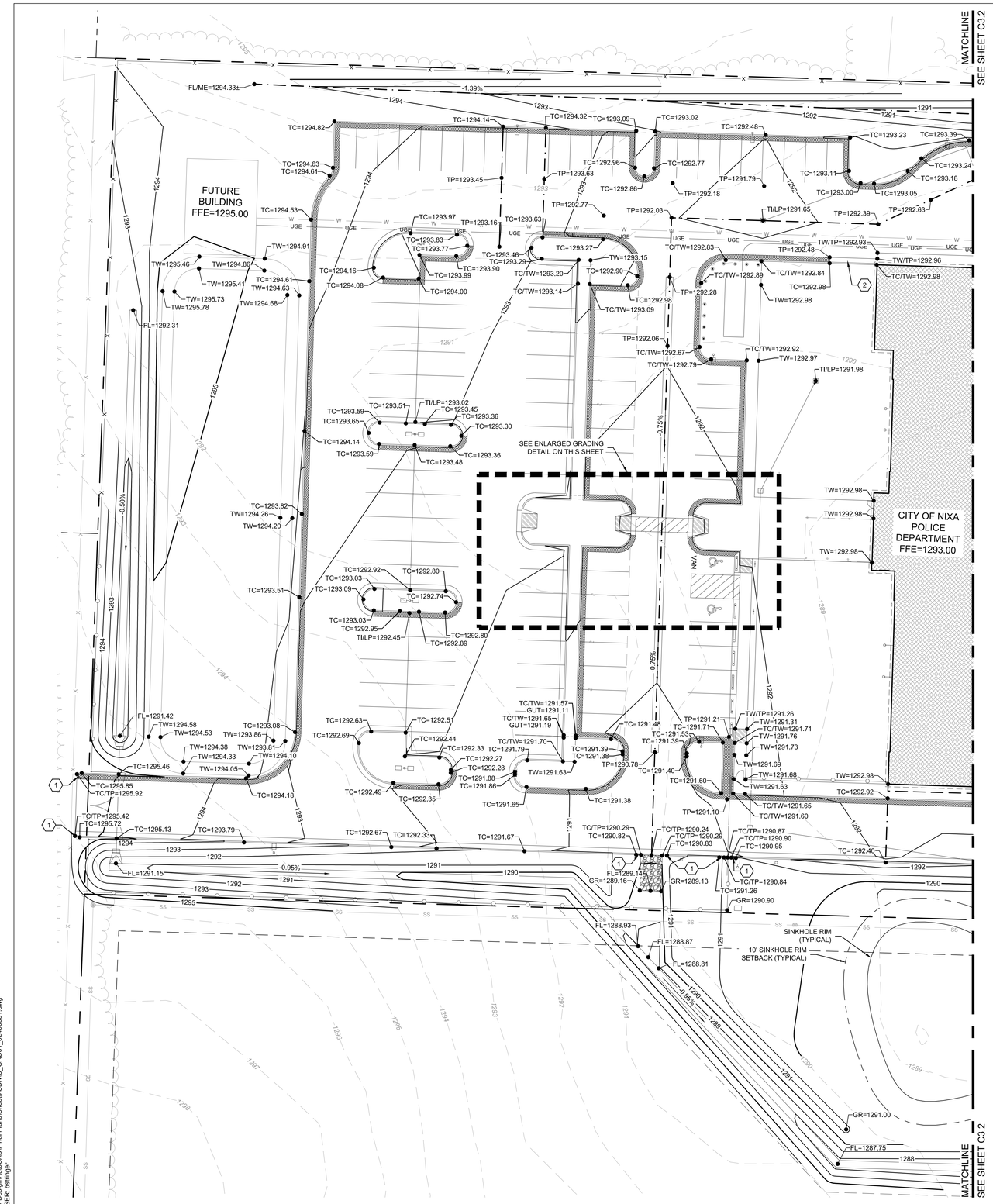

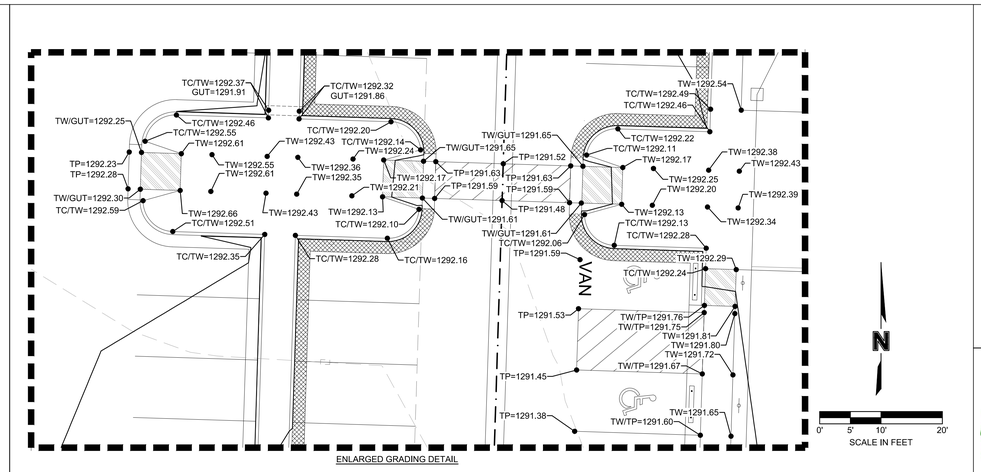

ENLARGED GRADING DETAIL

GRADING NOTES:

1. ALL ELEVATIONS ARE TO NORTH AMERICAN VERTICAL DATUM (N.A.V.D. 1988).

2. STRIPPINGS ARE TO BE STOCKPILED ON-SITE AS DIRECTED BY THE ENGINEER, FOLLOWING THE COMPLETION OF THE GRADING, THIS TOPSOIL SHALL BE USED AS FILL MATERIAL ON ALL LANDSCAPED AREAS. IF STOCKPILE IS INACTIVE FOR MORE THAN 14 DAYS, STABILIZE OR PROTECT THE PERIMETER. ALL EXCESS FILL MATERIAL AND TOPSOIL SHALL BE HAULED OFFSITE AT THE CONTRACTOR'S EXPENSE PRIOR TO COMPLETION OF THE PROJECT.

3. ALL HERBACEOUS VEGETATION SHALL BE REMOVED FROM WITHIN THE LIMITS OF THE GRADING AND REDISTRIBUTED WITH THE TOPSOIL AS OUTLINED IN NOTE #2.

4. CONTRACTOR SHALL USE CAUTION AROUND ANY EXISTING UTILITIES LOCATED ON-SITE. THEY SHALL BE RESPONSIBLE FOR THE REPAIRS OF SUCH STRUCTURES WHEN BROKEN OR OTHERWISE DAMAGED BY THE NEW CONSTRUCTION.

5. THE PROPOSED CONTOURS REPRESENT TOP OF SLAB IN PAVEMENT AREAS AND FINISHED GRADE IN ALL OTHER AREAS. QUANTITIES DO NOT TAKE INTO ACCOUNT CORE-OUT OR ANY OVER-EXCAVATION.

6. CONTRACTOR SHALL ADDRESS ANY GRADING RECOMMENDATIONS IDENTIFIED IN THE GEOTECHNICAL INVESTIGATION. PRIOR TO MOVING OFF THE JOB THE CONTRACTOR SHALL NOTIFY THE ENGINEER TO DO A FINAL WALK-THROUGH OF THE CONSTRUCTION SITE.

7. THE EXISTENCE AND LOCATION OF UNDERGROUND UTILITIES, PIPES AND STRUCTURES SHOWN ON THESE PLANS WERE OBTAINED BY A SEARCH OF AVAILABLE RECORDS AND TO THE BEST OF OUR KNOWLEDGE CONSTITUTES ALL KNOWN FACILITIES. HOWEVER, THE CONTRACTOR IS REQUIRED TO TAKE DUE PRECAUTIONARY MEASURES TO PROTECT ANY EXISTING UTILITIES OR STRUCTURES LOCATED AT THE WORK SITE. IT IS THE CONTRACTOR'S RESPONSIBILITY TO CONTACT AN UNDERGROUND LOCATE SERVICE IN ADVANCE OF ANY EXCAVATION FOR THE MARK-OUT OF THE LOCATION OF UTILITIES AND NOTIFICATION OF COMMENCEMENT OF WORK.

8. BEFORE EXCAVATING FOR THIS CONTRACT, THE CONTRACTOR SHALL FIELD VERIFY LOCATION OF UNDERGROUND UTILITIES. CONTRACTOR SHALL MAKE EXPLORATION EXCAVATIONS AND LOCATE EXISTING UNDERGROUND UTILITIES SUFFICIENTLY AHEAD OF CONSTRUCTION TO PERMIT REVISIONS TO PLANS IF REVISIONS ARE NECESSARY BECAUSE OF ACTUAL LOCATION OF EXISTING FACILITIES.

9. CONTRACTOR IS REQUIRED TO TAKE PRECAUTIONARY MEASURES TO PROTECT THE UTILITY LINES SHOWN AND ANY OTHER EXISTING LINES NOT OF RECORD OR NOT SHOWN ON THESE PLANS.

10. CONTRACTOR SHALL BE RESPONSIBLE FOR THE MAINTENANCE OF THE SEDIMENT CONTROL BARRIERS FOR A PERIOD OF 1 YEAR OR UNTIL THEY ARE RELEASED FROM THIS RESPONSIBILITY BY THE ENGINEER, WHICHEVER PERIOD IS SHORTER.

11. ALL ITEMS REMOVED SHALL BE DISPOSED OFF SITE BY THE CONTRACTOR AS PER CITY OF NIXA REQUIREMENTS.

12. IN ALL LOCATIONS WHERE NEW PAVEMENT ABUTS EXISTING, SAW CUT EXISTING PAVEMENT AS NECESSARY TO PROVIDE A SMOOTH TRANSITION AT THE JOINT. MATCH EXISTING GRADES AT THE JOINT IN ALL LOCATIONS.

13. ALL SIDEWALKS SHALL BE ADA ACCESSIBLE WITH RUNNING SLOPE BEING NO STEEPER THAN 5.00% AND CROSS SLOPES NO STEEPER THAN 2.00%. ALL LANDINGS OUTSIDE OF EXTERIOR ENTRANCES/EXITS SHALL BE NO STEEPER THAN 2.00% FOR THE FIRST 5'-0".

14. CONTRACTOR SHALL FINISH GRADE SLOPES AS SHOWN NO STEEPER THAN 1 FOOT VERTICAL IN 3 FEET HORIZONTAL.

KEYNOTES:

1. PROVIDE 2' CURB TRANSITION TO PAVEMENT (SEE DETAIL SHEET C8.0)
2. PROPOSED PAVEMENT TRANSITION TO CURB/SIDEWALK HEIGHT (SEE SHEETS C2.1-C2.2 FOR LENGTH)
3. CONSTRUCT VARIABLE WIDTH CURB DRAINAGE OPENING W/ 2' CURB TRANSITIONS ON EITHER SIDE. (SEE SHEET C2.1 FOR MORE INFORMATION) (SEE DETAIL SHEET C8.1)

LEGEND

	RIGHT-OF-WAY LINE
	PROPERTY LINE
	UTILITY EASEMENT
	BREAK IN GRADE
899	EXIST. CONTOUR
899	FINISH GRADE CONTOUR
	PROPOSED STANDARD CURB & GUTTER
	PROPOSED "DRY" CURB & GUTTER
TP=899.00	TOP OF PAVEMENT
TC=899.00	TOP OF CURB
TW=899.00	TOP OF SIDEWALK
TI=899.00	TOP OF INLET
GUT=899.00	CURB GUTTER
GR=899.00	FINISHED GROUND
TS=899.00	TOP OF STAIRS
BS=899.00	BOTTOM OF STAIRS
HFG=899.00	HIGH FINISHED GRADE OF RETAINING WALL
LFG=899.00	LOW FINISHED GRADE OF RETAINING WALL
HP	HIGH POINT
LP	LOW POINT
ME	MATCH EXISTING
	SIDEWALK RAMP - SLOPES @ 8.33% MAX.

BENCHMARKS:

BENCHMARK #1 - TOP NUT OF FIRE HYDRANT 63' E. OF EXIST. EASTERN PROPERTY LINE & 124' SOUTH OF NORTHERN PROPERTY LINE
N: 442855.34 E: 1400549.85
ELEVATION: 1288.78

Olsson, Inc. Engineering MO State Cert. of Authority #001592
Olsson, Inc. Landscape Architecture MO State Cert. of Authority #2005000285
550 East St. Louis Street
Springfield, MO 65806
olsson.com
TEL 417.890.8802
FAX 417.890.8805

NIXA POLICE DEPARTMENT

305 N. LEEANN DRIVE
NIXA, MO 65714

INSIGHT DESIGN IDeA ARCHITECTS
112 S. Main St., Nixa, MO 65714 Ph: 417-724-8553
CJD Engineering | Energy | Innovation
olsson
METTEMEYER ENGINEERING
Chindini ARCHITECTS
Architecture / Interior Design / Graphics
1401 S. Brentwood Blvd. | Suite 215 St. Louis, Missouri 63144
314-535-5581 | info@chindini.com

Reissue Date

Professional of Record

STATE OF MISSOURI
RICKY HAAS
NUMBER PE-2010017828
06/11/2025
PROFESSIONAL ENGINEER

DATE 06/11/2025

Copyright 2024 ©
These prints are the property of the architect and shall be usedonly for the project referenced above

Drawn by
BWS

Project #
024-00531

Date
2025.06.11

Drawing Title:
WEST GRADING PLAN

Sheet:
C3.1

F:\2024\00501-01000\024-00531\140-Design\AutoCAD\Final Plans\Sheets\SDNKC_GRD01_024x00531.dwg
DATE: Jun 10, 2025 10:59am USER: bstringer

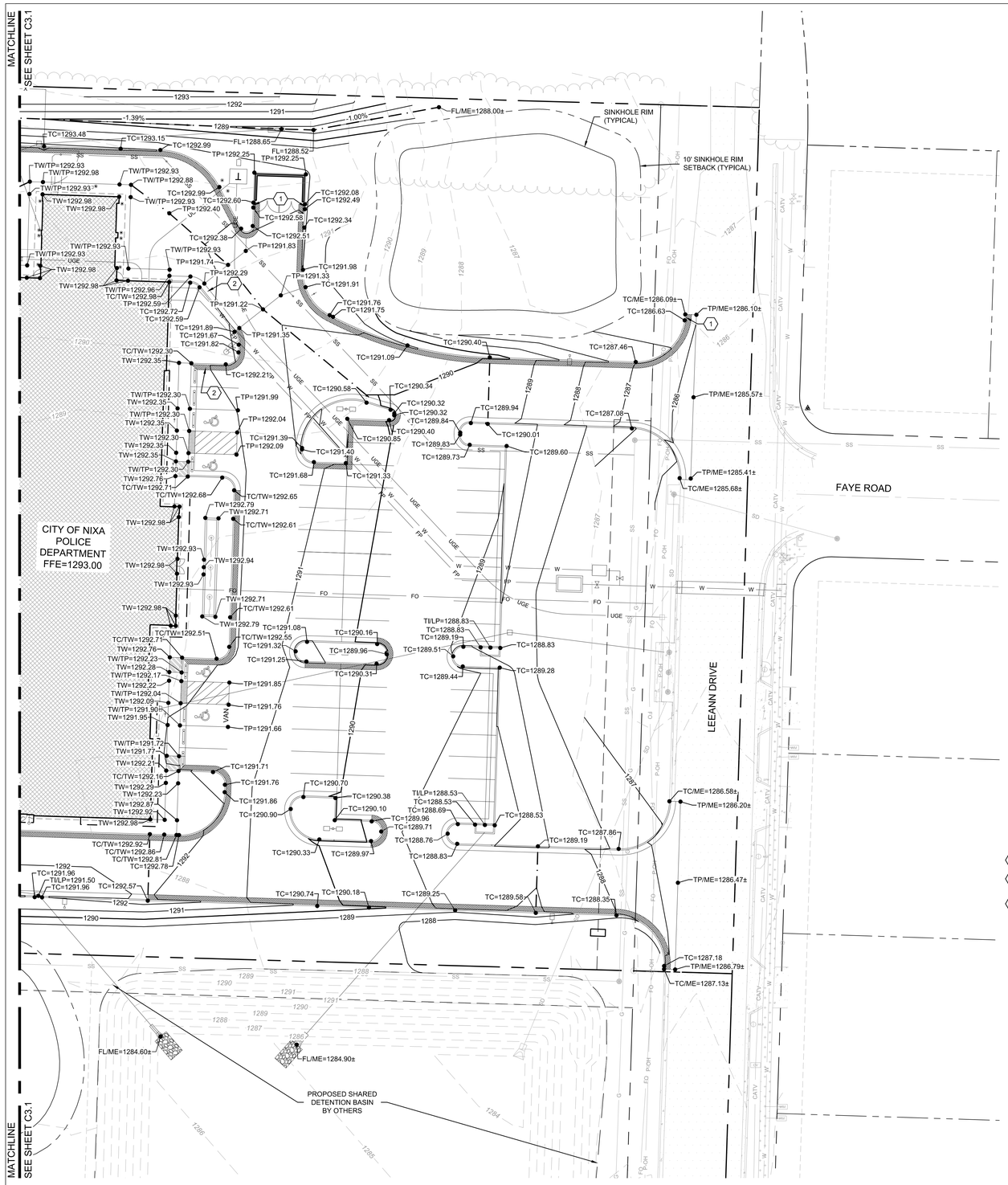

KEYNOTES:

1. PROVIDE 2' CURB TRANSITION TO PAVEMENT (SEE DETAIL SHEET C8.0)
2. PROPOSED PAVEMENT TRANSITION TO CURB/SIDEWALK HEIGHT (SEE SHEETS C2.1-C2.2 FOR LENGTH)
3. CONSTRUCT VARIABLE WIDTH CURB DRAINAGE OPENING W/ 2' CURB TRANSITIONS ON EITHER SIDE. (SEE SHEET C2.1 FOR MORE INFORMATION) (SEE DETAIL SHEET C8.1)

LEGEND

	RIGHT-OF-WAY LINE
	PROPERTY LINE
	UTILITY EASEMENT
	BREAK IN GRADE
899	EXIST. CONTOUR
899	FINISH GRADE CONTOUR
	PROPOSED STANDARD CURB & GUTTER
	PROPOSED "DRY" CURB & GUTTER
TP=899.00	TOP OF PAVEMENT
TC=899.00	TOP OF CURB
TW=899.00	TOP OF SIDEWALK
TI=899.00	TOP OF INLET
GUT=899.00	CURB GUTTER
GR=899.00	FINISHED GROUND
TS=899.00	TOP OF STAIRS
BS=899.00	BOTTOM OF STAIRS
HFG=899.00	HIGH FINISHED GRADE OF RETAINING WALL
LFG=899.00	LOW FINISHED GRADE OF RETAINING WALL
HP	HIGH POINT
LP	LOW POINT
ME	MATCH EXISTING
	SIDEWALK RAMP - SLOPES @ 8.33% MAX.

N

0' 10' 20' 40'
SCALE IN FEET

BENCHMARKS:

BENCHMARK #1 - TOP NUT OF FIRE HYDRANT 63' E. OF EXIST. EASTERN PROPERTY LINE & 124' SOUTH OF NORTHERN PROPERTY LINE
N: 442855.34 E: 1400549.85
ELEVATION: 1288.78

MISSOURI 811

olsson
550 East St. Louis Street
Springfield, MO 65806
olsson.com
TEL 417.890.8802
FAX 417.890.8805
Olsson, Inc. Engineering MO State Cert. of Authority #001592
Olsson, Inc. Landscape Architecture MO State Cert. of Authority #2005000285

NIXA POLICE DEPARTMENT

305 N. LEEANN DRIVE
NIXA, MO 65714

INSIGHT DESIGN IDeA ARCHITECTS
112 S. Main St., Nixa, MO 65714 Ph: 417-724-8553
CJD Engineering | Energy | Innovation
olsson
METTEMEYER ENGINEERING LLC
Chiodini ARCHITECTS
Architecture / Interior Design / Graphics
1401 S. Brentwood Blvd. | Suite 375 | St. Louis, Missouri 63144
314-725-5588 | eric@chiodini.com

Reissue Date

Professional of Record

STATE OF MISSOURI
RICKY HAASE
NUMBER
PE-2019017828
06/11/2025
PROFESSIONAL ENGINEER

DATE 06/11/2025

Copyright 2024 ©
These prints are the property of the architect and shall be usedonly for the project referenced above

Drawn by
BWS

Project #
024-00531

Date
2025.06.11

Drawing Title:
EAST GRADING PLAN

Sheet:
C3.2

F:\2024\00501-01000\024-00531\40-Design\AutoCAD\Final Plans\Sheets\SDN\C_GRD01_02400531.dwg
DATE: Jun 10, 2025 11:00am USER: bstringer

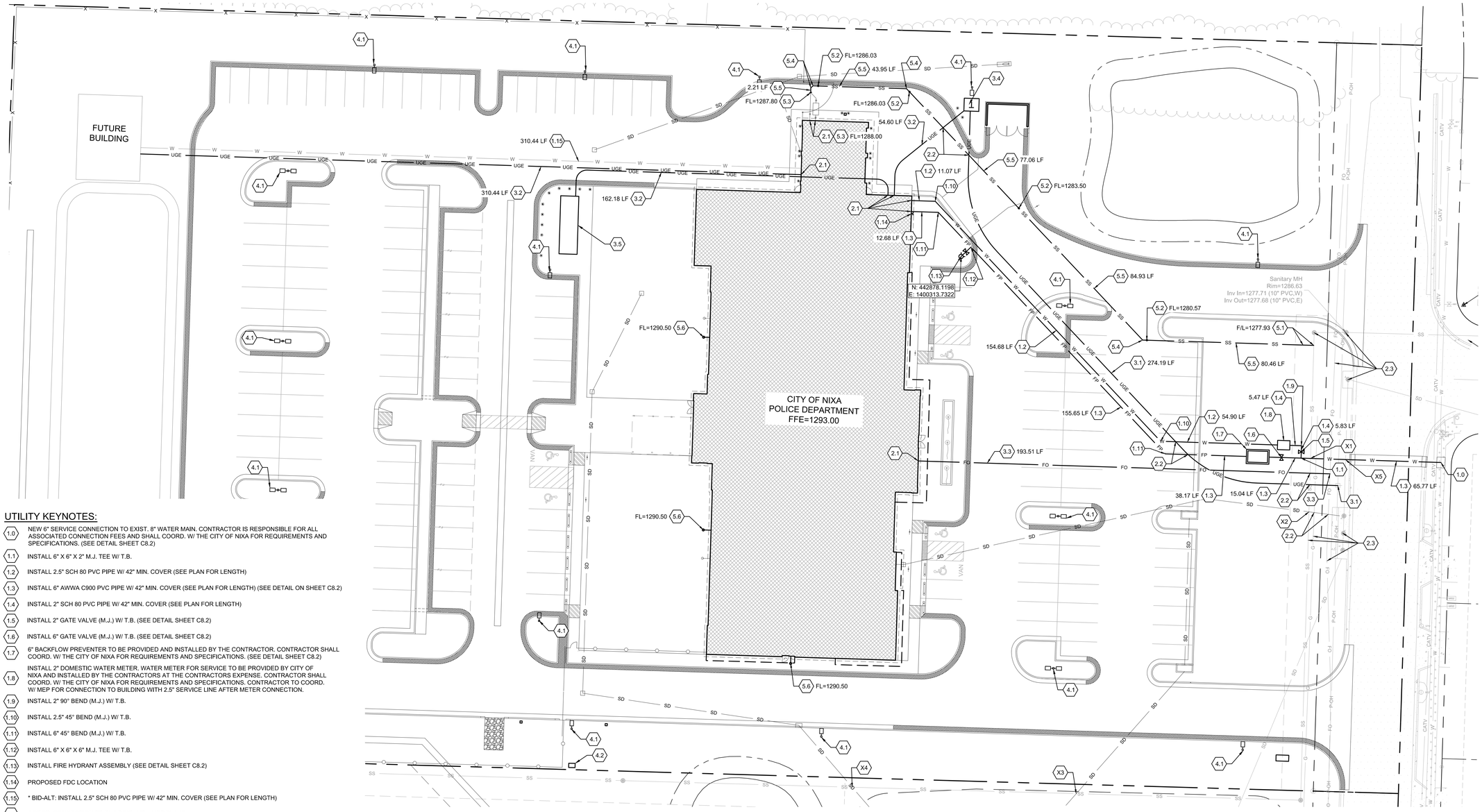

UTILITY KEYNOTES:

1.0 NEW 6" SERVICE CONNECTION TO EXIST. 8" WATER MAIN. CONTRACTOR IS RESPONSIBLE FOR ALL ASSOCIATED CONNECTION FEES AND SHALL COORD. W/ THE CITY OF NIXA FOR REQUIREMENTS AND SPECIFICATIONS. (SEE DETAIL SHEET C8.2)

1.1 INSTALL 6" X 6" X 2" M.J. TEE W/ T.B.

1.2 INSTALL 2.5" SCH 80 PVC PIPE W/ 42" MIN. COVER (SEE PLAN FOR LENGTH)

1.3 INSTALL 6" AWWA C900 PVC PIPE W/ 42" MIN. COVER (SEE PLAN FOR LENGTH) (SEE DETAIL ON SHEET C8.2)

1.4 INSTALL 2" SCH 80 PVC PIPE W/ 42" MIN. COVER (SEE PLAN FOR LENGTH)

1.5 INSTALL 2" GATE VALVE (M.J.) W/ T.B. (SEE DETAIL SHEET C8.2)

1.6 INSTALL 6" GATE VALVE (M.J.) W/ T.B. (SEE DETAIL SHEET C8.2)

1.7 6" BACKFLOW PREVENTER TO BE PROVIDED AND INSTALLED BY THE CONTRACTOR. CONTRACTOR SHALL COORD. W/ THE CITY OF NIXA FOR REQUIREMENTS AND SPECIFICATIONS. (SEE DETAIL SHEET C8.2)

1.8 INSTALL 2" DOMESTIC WATER METER. WATER METER FOR SERVICE TO BE PROVIDED BY CITY OF NIXA AND INSTALLED BY THE CONTRACTORS AT THE CONTRACTORS EXPENSE. CONTRACTOR SHALL COORD. W/ THE CITY OF NIXA FOR REQUIREMENTS AND SPECIFICATIONS. CONTRACTOR TO COORD. W/ MEP FOR CONNECTION TO BUILDING WITH 2.5" SERVICE LINE AFTER METER CONNECTION.

1.9 INSTALL 2" 90° BEND (M.J.) W/ T.B.

1.10 INSTALL 2.5" 45° BEND (M.J.) W/ T.B.

1.11 INSTALL 6" 45° BEND (M.J.) W/ T.B.

1.12 INSTALL 6" X 6" X 6" M.J. TEE W/ T.B.

1.13 INSTALL FIRE HYDRANT ASSEMBLY (SEE DETAIL SHEET C8.2)

1.14 PROPOSED FDC LOCATION

1.15 * BID-ALT: INSTALL 2.5" SCH 80 PVC PIPE W/ 42" MIN. COVER (SEE PLAN FOR LENGTH)

2.1 COORD. CONNECTION TO BUILDING WITH MEP PLANS

2.2 MAINTAIN MIN. CLEARANCE OF 18" BETWEEN STORM SEWER, SANITARY SEWER, & PRIVATE WATERLINES & ALL UNDERGROUND UTILITIES.

2.3 CONTRACTOR SHALL USE CAUTION WHILE WORKING AROUND OR CROSSING EXISTING UTILITY

3.1 INSTALL PRIMARY ELECTRIC SERVICE CONDUIT(S) W/ PULL STRINGS AND CONNECT TO EXIST. ELECTRICAL POLE. COORD. WITH CITY OF NIXA FOR CONDUIT SIZE, QUANTITY, FINAL ROUTING AND SPECIFICATIONS. (SEE PLAN FOR LENGTH)

3.2 INSTALL SECONDARY ELECTRIC SERVICE CONDUIT(S) W/ PULL STRINGS. REFER TO MEP PLANS FOR CONDUIT SIZE, QUANTITY, FINAL ROUTING & SPECIFICATIONS (SEE PLAN FOR LENGTH)

3.3 INSTALL FIBER OPTIC CONDUIT(S) W/ PULL STRINGS. COORD. W/ AT&T & MEP PLANS FOR CONDUIT SIZE, QUANTITY, FINAL ROUTING, AND SPECIFICATIONS. ALL FEES ASSOCIATED WITH THIS WORK & MATERIALS SHALL BE THE RESPONSIBILITY OF THE CONTRACTOR. (SEE PLAN FOR LENGTH)

3.4 PROP. TRANSFORMER PAD LOCATION. COORD. INSTALLATION W/ LIBERTY UTILITIES AND CITY OF NIXA AND INSTALL PER MANUFACTURER'S RECOMMENDATIONS.

3.5 PROP. CUMMINS 750 DQCB EMERGENCY BACKUP GENERATOR LOCATION. CONTRACTOR TO INSTALL ACCORDING TO MANUFACTURER'S RECOMMENDATIONS. REFER TO ELECTRICAL SHEETS FOR MORE INFO

4.1 SITE LIGHTING (SEE SHEETS C2.1-C2.2 FOR ADDITIONAL LOCATIONS) (REFER TO MEP SHEETS FOR DETAILS)

4.2 APPROX. LOCATION OF PROP. GATE UTILITY VAULT (REFER TO SECURITY AND MEP SHEETS FOR MORE INFORMATION)

5.1 CONNECT NEW 4" PVC SANITARY SEWER SERVICE LINE TO EXIST. 8" SANITARY SEWER MAIN W/ 5' SANITARY SEWER SERVICE LATERAL W/ CLEANOUT. CONTRACTOR TO VERIFY INVERT ELEVATION PRIOR TO CONNECTION. (SEE DETAIL SHEET C8.2) (SEE PLAN FOR INV. ELEV.)

5.2 INSTALL 2-WAY SANITARY SEWER CLEANOUT (SEE DETAIL SHEET C8.2) (SEE PLAN FOR INV. EL.)

5.3 COORD. W/ MEP FOR SANITARY SEWER LINE CONNECTION TO GREASE INTERCEPTOR AND BUILDING. (SEE PLAN FOR INV. EL.)

5.4 INSTALL 4" SCH40 PVC 45° BEND. ASSOCIATED 2-WAY SANITARY SEWER CLEANOUT TO BE INSTALLED 2' DOWNSTREAM OF BEND.

5.5 INSTALL 4" SCH40 PVC SANITARY SEWER SERVICE LINE @ 2.08% MIN. SLOPE (SEE PLAN FOR LENGTH)

5.6 CONTRACTOR TO INSTALL 4' SANITARY SEWER STUB W/ CLEANOUT (SEE DETAIL SHEET C8.2) (SEE PLAN FOR INV. EL.)

UTILITY COMPANIES:

DIRECTOR UTILITIES & PUBLIC WORKS
CITY OF NIXA
715 W. MT. VERNON
NIXA, MO 65714
CONTACT:DOUG COLVIN
EMAIL: dcolvin@nixa.com
CONTACT: TRAVIS COSSEY
EMAIL: tcossey@nixa.com
PH: (417) 725-2353

WATER QUALITY SUPERINTENDENT
CONTACT: JASON STUTESMUN
EMAIL:jstutesmun@nixa.com
PH: (417) 725-2353

ELECTRIC SUPERINTENDENT
CONTACT: BRIAN DENNEY
PH: (417) 725-2353
EMAIL: bdenney@nixa.com

FIBER OPTICS/TELEPHONE
AT&T
600 ST. LOUIS STREET
SPRINGFIELD, MO 65806
CONTACT: ADAM MOON
PH: (417) 836-2146
EMAIL: am8421@att.com

GAS
SPIRE ENERGY
DUSTIN BORLAND
520 E. 5th STREET
JOPLIN, MO 64801
PH: OFFICE (417) 626-4837
PH: MOBILE (417) 317-2004
EMAIL: Dustin.Borland@spireenergy.com

DOMESTIC WATER & FIRE PROTECTION LINE GENERAL NOTES:

1. CONTRACTOR TO VERIFY WITH ARCHITECTURAL/MEP PLANS FOR SIZE AND LOCATION OF UTILITY SERVICE TO BUILDING BEFORE CONSTRUCTION.
2. WHERE THE WATER SERVICE IS TO BE CONSTRUCTED BELOW OR WITHIN 18 INCHES OF ANY SEWER PIPE, THE CONTRACTOR SHALL LAY A FULL LENGTH OF WATER SERVICE PIPE CENTERED ON THE SEWER OR SUCH LENGTH AS WILL PROVIDE THE MAXIMUM POSSIBLE SEPARATION OF THE JOINTS IN THE WATER SERVICE FROM THE SEWER LINE. IF NOT ALREADY SO, THE CONTRACTOR SHALL CONSTRUCT SANITARY SEWER WITH ONE 20 FOOT NOMINAL LENGTH OF PRESSURE PIPE MATERIAL CENTERED ON THE WATER SERVICE, SUCH THAT THE MAXIMUM POSSIBLE SEPARATION BETWEEN THE WATER SERVICE AND THE SEWER PIPE JOINTS WILL RESULT. THE BACKFILL MATERIAL SHALL BE SELECT, LOW PERMEABILITY SOIL.
3. REMOVE SPOIL MATERIAL FROM SITE.
4. THE CONTRACTOR SHALL NOT EXCEED MANUFACTURERS RECOMMENDATIONS FOR MAXIMUM PIPE JOINT DEFLECTIONS.
5. PRIOR TO MOVING OFF THE JOB THE CONTRACTOR SHALL NOTIFY THE ENGINEER TO DO A FINAL WALK-THROUGH OF THE CONSTRUCTION SITE.
6. PRIOR TO FINAL ACCEPTANCE ALL WATER SERVICE PIPE SHALL BE PRESSURE TESTED BY THE CONTRACTOR IN ACCORDANCE WITH THE CITY OF NIXA REQUIREMENTS.
7. PRIOR TO FINAL ACCEPTANCE ALL WATER SERVICE PIPE SHALL BE DISINFECTED BY THE CONTRACTOR IN ACCORDANCE WITH THE CITY OF NIXA REQUIREMENTS.
8. LOCATION AND ELEVATIONS OF IMPROVEMENTS TO BE MET (OR AVOIDED) BY WORK TO BE DONE SHALL BE CONFIRMED BY THE CONTRACTOR THROUGH FIELD EXPLORATIONS PRIOR TO CONSTRUCTION. CONTRACTOR SHALL REPORT TO THE ENGINEER OR CITY INSPECTOR ANY DISCREPANCIES BETWEEN HIS MEASUREMENTS AND THESE PLANS.
9. ALL WATER SERVICE CONSTRUCTION SHALL BE DONE UNDER A PLUMBERS PERMIT. THE CONTRACTOR SHALL BE RESPONSIBLE FOR OBTAINING ALL NECESSARY PERMITS.
10. MAINTAIN 42" MINIMUM COVER OVER TOP OF WATER SERVICE PIPE.
11. WATER SERVICE PIPE MATERIALS SHALL BE SCH80 PVC FOR IRRIGATION WATER LINE & DOMESTIC SERVICE UNDER 4" AND AWWA C900 PVC FOR FIRE PROTECTION, DOMESTIC & SERVICE MAINS OVER 4".
12. INSTALLATION OF FIRE SERVICE SHALL BE IN ACCORDANCE WITH CURRENT NFPA 24 GUIDELINES.
13. CONTRACTOR SHALL BE RESPONSIBLE TO DEFLECT PIPE OR ADD FITTINGS AS NECESSARY TO MAINTAIN A MINIMUM 18" OF CLEARANCE BETWEEN FIRE/WATER LINES AND ALL OTHER UNDERGROUND UTILITIES.

CROSSING KEYNOTES:

X1 EX. 8" SAN. F/L=1278.19
6" WATER F/L=1280.25±

X2 EX. 8" SAN. F/L=1278.32
15" STORM F/L=1284.29

X3 EX. 8" SAN. F/L=1280.26
18" STORM F/L=1285.14

X4 EX. 8" SAN. F/L=1281.32
12" STORM F/L=1286.29

X5 EX. 30" SAN. F/L=1282.50±
12" STORM F/L=1280.25±

LEGEND

	RIGHT-OF-WAY LINE
	PROPERTY LINE
	UTILITY EASEMENT
SD	INSTALL STORM SEWER PIPE
W	INSTALL DOMESTIC WATER SERVICE LINE
SS	INSTALL SANITARY SEWER SERVICE
FO	INSTALL FIBER/OPTIC LINE
UGE	INSTALL UNDERGROUND ELECTRIC LINE

WATER LINE GENERAL NOTES:

1. THRUST BLOCKS SHALL BE INSTALLED WHERE NOTED (SEE DETAIL SHEET C8.2)
2. WHERE THRUST BLOCKS AT BENDS ARE REQUIRED ADJACENT TO OTHER UTILITIES, BENCH UTILITIES AT LEAST 12" TO MAINTAIN THRUST BLOCKS AGAINST UNDISTURBED EARTH AS SHOWN ON DETAIL SHEET.
3. SEE DETAIL SHEET C8.2 FOR PUBLIC WATER PIPE BEDDING

SANITARY SEWER GENERAL NOTE:

SANITARY SERVICE LATERAL SHALL BE SCH40 PVC.
MINIMUM SLOPE FOR SANITARY SEWER LATERALS:
4" SEWER LATERAL SLOPE = 2.08% MIN.

N

0' 10' 20' 40'
SCALE IN FEET

BENCHMARKS:

BENCHMARK #1 - TOP NUT OF FIRE HYDRANT 63' E. OF EXIST. EASTERN PROPERTY LINE & 124' SOUTH OF NORTHERN PROPERTY LINE
N: 442855.34 E: 1400549.85
ELEVATION: 1288.78

MISSOURI 811

olsson
550 East St. Louis Street
Springfield, MO 65806
olsson.com
TEL 417.890.8802
FAX 417.890.8805
Olsson, Inc. Engineering MO State Cert. of Authority #001592
Olsson, Inc. Landscape Architecture MO State Cert. of Authority #2005000285

NIXA POLICE DEPARTMENT

305 N. LEEANN DRIVE
NIXA, MO 65714

INSIGHT DESIGN IDeA ARCHITECTS
112 S. Main St., Nixa, MO 65714 Ph: 417-724-8553

CJD Engineering | Energy | Innovation

olsson

METTEMEYER ENGINEERING

Chiodini ARCHITECTS
Architecture / Interior Design / Graphics
1401 S. Brentwood Blvd. | Suite 575 | St. Louis, Missouri 63144
314-725-0881 | info@chiodini.com

Reissue Date

Professional of Record

STATE OF MISSOURI
RICKY HAASE
NUMBER
PE-2010017828
06/11/2025
PROFESSIONAL ENGINEER

DATE 06/11/2025

Copyright 2024 ©
These prints are the property of the architect and shall be usedonly for the project referenced above

Drawn by
BWS

Project #
024-00531

Date
2025.06.11

Drawing Title:
UTILITY PLAN

Sheet:
C4.0

F:\2024\00531-01\00\024-00531\140-Design\AutoCAD\Final Plans\Sheets\SD\NC_UTL01_024005S1.dwg
DATE: Jun 10, 2025 11:02am USER: bstringer

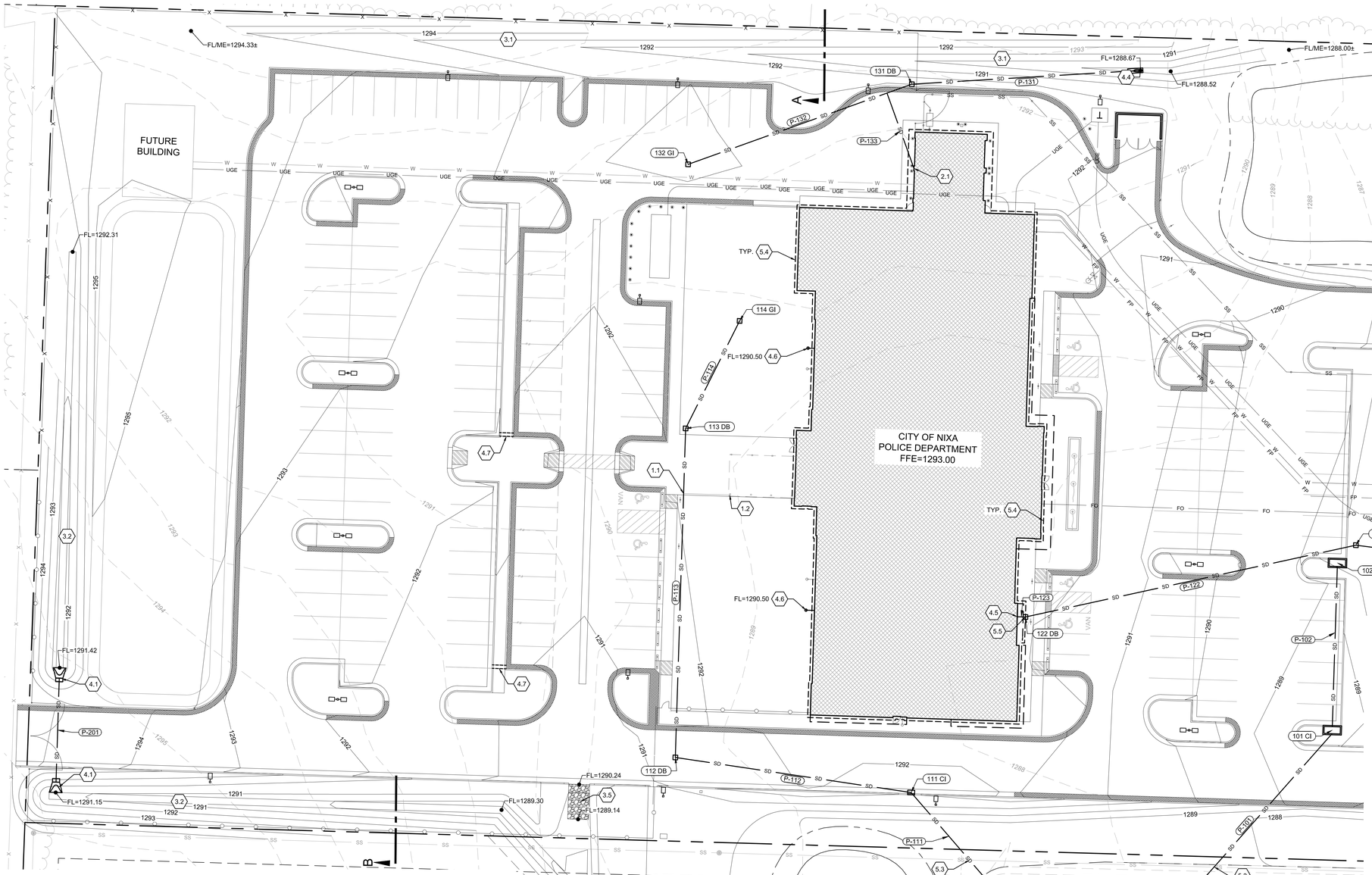

STORM SEWER KEYNOTES:

1.1 BID ALT: CONNECT 19.88 L.F. OF 6" HDPE PIPE FROM DOWNSPOUT TO PROP. STORM PIPE WITH INSERTA TEE. INSTALL PER MANUFACTURER'S RECOMMENDATIONS.

1.2 BID ALT: CONNECT TO PROP. PATIO ROOFDRAIN W/ 6" HDPE DOWNSPOUT. SEE DETAIL SHEET C8.3 AND ARCH. PLANS FOR DOWNSPOUT LOCATIONS. COORD. FOOTING PENETRATION, PIPE COUPLINGS, AND ROOF DRAIN SIZE/ELEVATION PER STRUCT. & MEP PLANS. TYP. F/L ELEV = 1290.50

2.1 CONNECT TO BUILDING ROOFDRAIN W/ 6" HDPE DOWNSPOUT. SEE DETAIL SHEET C8.3 AND ARCH. PLANS FOR DOWNSPOUT LOCATIONS. COORD. FOOTING PENETRATION, PIPE COUPLINGS, AND ROOF DRAIN SIZE/ELEVATION PER STRUCT. & MEP PLANS. TYP. F/L ELEV = 1289.50

3.1 CONSTRUCT 473 L.F. GRASS-LINED CHANNEL. REFER TO SHEET C3.1-C3.2 FOR FINISHED GRADE ELEVATIONS. (SEE SHEET C8.3 FOR SECTION-A DETAIL)

3.2 CONSTRUCT 648 L.F. CONCRETE DRAINAGE SWALE. REFER TO SHEET C3.1-C3.2 FOR FINISHED GRADE ELEVATIONS. (SEE SHEET C8.3 FOR SECTION-B DETAIL)

3.3 INSTALL 6' X 10' TYPE "L" RIPRAP (SEE SHEET C8.3 FOR DETAIL)

3.4 INSTALL 6' X 22' TYPE "L" RIPRAP (SEE SHEET C8.3 FOR DETAIL)

3.5 INSTALL 9' X 15' TYPE "L" RIPRAP (SEE SHEET C8.3 FOR DETAIL)

4.1 INSTALL 30" CONCRETE FES W/ TOEWALL (SEE PLAN FOR F/L ELEVATION) (SEE SHEET C8.3 FOR DETAIL)

4.2 INSTALL 12" CONCRETE FES W/ TOEWALL (SEE PLAN FOR F/L ELEVATION) (SEE SHEET C8.3 FOR DETAIL)

4.3 INSTALL 18" CONCRETE FES W/ TOEWALL (SEE PLAN FOR F/L ELEVATION) (SEE SHEET C8.3 FOR DETAIL)

4.4 INSTALL 12" MITER DRAIN W/ TYPE 1 CONCRETE HEADWALL (SEE PLAN FOR F/L ELEVATION) (SEE SHEET C8.4 FOR DETAIL)

4.5 INSTALL 12" PP CONNECTION TO COMBINED BUILDING DOWNSPOUT OUTLET LOCATION. SEE THIS SHEET FOR F/L ELEVATION

4.6 INSTALL 6" HDPE STUB W/ CLEANOUT FOR FUTURE BUILDING EXPANSION. (SEE PLAN FOR INV. EL.) (SEE SHEET C8.4 FOR DETAIL)

4.7 INSTALL 5 L.F. SIDEWALK UNDERDRAIN (SEE SHEET C3.1 FOR SPOT ELEVATIONS) (SEE SHEET C8.4 FOR DETAIL)

5.1 CONNECT PROP. 15" PP PIPE TO EXIST. CURB INLET. SEE TABLES ON THIS SHEET FOR F/L INFORMATION

5.2 CONTRACTOR TO RAISE/LOWER EXIST. GAS AND FIBER LINE AS NECESSARY TO INSTALL PROP. STORM SEWER

5.3 PROP. STORM SEWER AND EXIST. SEWER MAIN UTILITY CROSSING. REFER TO SHEET C4.0 FOR CROSSING INFORMATION

5.4 CONTRACTOR TO INSTALL 4" HDPE PERFORATED FOUNDATION DRAIN. REFER TO ARCH. & STRUCTURAL SHEETS FOR FOUNDATION DETAILS. FOUNDATION DRAIN TO BE INSTALLED AT F/L=1290.50

5.5 CONTRACTOR TO CONNECT 4" HDPE PERFORATED FOUNDATION DRAIN TO PROP. 15" D.B.

PIPES				
PIPE ID	2D LENGTH (LF) (CENTER TO CENTER)	DIAMETER AND MATERIAL	SLOPE	STRUCTURES AND INVERTS
P-101	109.08	18" PP	0.74%	START: 1285.71 END: 1284.90
P-102	69.00	15" PP	1.00%	START: 1286.40 END: 1285.71
P-111	69.06	12" PP	2.26%	START: 1287.16 END: 1285.60
P-112	102.63	12" PP	1.57%	START: 1288.77 END: 1287.16
P-113	141.68	6" HDPE	1.00%	START: 1290.18 END: 1288.77
P-114	51.76	6" HDPE	1.00%	START: 1290.70 END: 1290.18
P-121	63.17	15" PP	4.40%	START: 1285.50 END: 1282.72
P-122	145.55	15" PP	2.23%	START: 1288.75 END: 1285.50
P-123	3.50	15" PP	2.29%	START: 1288.83 END: 1288.75
P-131	98.64	12" PP	0.50%	START: 1289.14 END: 1288.65
P-132	102.27	12" PP	0.50%	START: 1289.65 END: 1289.14
P-133	34.39	6" HDPE	5.23%	START: 1291.50 END: 1289.70
P-201	41.68	30" PP	0.65%	START: 1291.42 END: 1291.15

STORM SEWER NOTES:

1. 12" DIA. & LARGER PIPE SHALL BE ADS HP (POLYPROPYLENE) PIPE. 10" DIA. & SMALLER PIPE SHALL BE ADS N-12 ST (HDPE) PIPE, OR EQUAL. INSTALL IN ACCORDANCE WITH MANUFACTURER'S SPECIFICATIONS.
2. CONTRACTOR SHALL MAINTAIN A MINIMUM OF 18" VERTICAL CLEARANCE BETWEEN CROSSING UTILITIES, UNLESS OTHERWISE SHOWN ON PLANS.
3. CONTRACTOR SHALL INSTALL ALL BENDS, WYES, FITTINGS AND PIPE NECESSARY FOR STORM SEWER CONNECTIONS.
4. ALL HP & HDPE STORM DRAINS SHALL HAVE A MINIMUM SLOPE OF 1.00% UNLESS NOTED OTHERWISE ON PLANS.
5. SEE MEP, STRUCTURAL AND ARCHITECTURAL PLANS FOR PLACEMENT AND ELEVATION OF FOUNDATION DRAINS. CONTRACTOR SHALL CONTACT ENGINEER IF ANY DISCREPANCIES ARE ENCOUNTERED WITHIN THE DESIGN SHOWN ON THESE PLANS.
6. ALL STORM LINES SHALL HAVE A MINIMUM OF 12" COVER UNLESS SPECIFIED OTHERWISE ON PLANS.
7. TOP ELEVATIONS GIVEN FOR NYLOPLAST STRUCTURES ARE TO FINISH GRADE AND DO NOT INCLUDE HEIGHT OF DOME LIDS OR OTHER CASTINGS.
8. ALL STORM SEWER CASTINGS WITHIN TRAFFIC AREAS SHALL MEET OR EXCEED AASHTO H-20 LOAD RATING.
9. ALL NYLOPLAST STRUCTURES SHALL BE INSTALLED IN ACCORDANCE WITH MANUFACTURER'S SPECIFICATIONS. ALL NYLOPLAST GRATES AND LIDS SHALL BE LOCKING.
10. SHOP DRAWINGS MUST BE SUBMITTED FOR REVIEW TO THE ENGINEER 14 DAYS PRIOR TO FABRICATION FOR ALL PRE-CAST CONCRETE STORM SEWER STRUCTURES. FAILURE TO DO SO SHALL RESULT IN REJECTION.
11. STORM STRUCTURE INLET TOPS SHALL BE SLOPED TO MATCH BACK OF CURB PROFILE & SIDEWALK CROSS SLOPE.
12. SEE DETAIL SHEET C8.3 FOR STORM SEWER DETAILS.
13. SEE DETAIL SHEET C8.3 FOR STORM PIPE BEDDING.
14. CONTRACTOR SHALL FIELD VERIFY EXIST. PIPE LOCATION, ELEVATION & SIZE PRIOR TO ORDERING PRECAST JUNCTION BOX.
15. CONTRACTOR SHALL NOTIFY THE ENGINEER OF ANY CONDITIONS THAT AFFECT THE DESIGN SHOWN ON THESE PLANS.

STRUCTURES	
ID	DESCRIPTION
101 CI	7' X 3' CURB INLET SEE DETAIL SHEET C8.3 RIM= 1288.63 INV IN = 1285.71 (15" PP) INV OUT = 1285.71 (18" PP) N: 442684.674; E: 1400418.726
102 CI	7' X 3' CURB INLET SEE DETAIL SHEET C8.3 RIM= 1288.93 INV OUT = 1286.40 (15" PP) N: 442756.639; E: 1400420.980
111 CI	18" 2X3 CURB INLET W/ GRATE SEE DETAIL SHEET C8.4 RIM= 1291.52 INV IN = 1287.16 (12" PP) INV OUT = 1287.16 (12" PP) N: 442657.836; E: 1400237.515
112 DB	12" NYLOPLAST D.B. W/ SOLID LID SEE DETAIL SHEET C8.4 RIM= 1291.19 INV IN = 1288.77 (6" HDPE) INV OUT = 1288.77 (12" PP) N: 442672.938; E: 1400136.001
113 DB	12" NYLOPLAST D.B. W/ SOLID LID SEE DETAIL SHEET C8.4 RIM= 1291.59 INV IN = 1290.18 (6" HDPE) INV OUT = 1290.18 (6" HDPE) N: 442814.551; E: 1400140.438
114 GI	12" NYLOPLAST D.B. W/ DOME GRATE SEE DETAIL SHEET C8.4 RIM= 1291.98 INV OUT = 1290.70 (6" HDPE) N: 442860.806; E: 1400163.674

STRUCTURES	
ID	DESCRIPTION
120 EX	EXIST. CURB INLET RIM= 1286.32 INV IN = 1282.72 (15" PP) N: 442756.221; E: 1400493.572
121 DB	15" NYLOPLAST D.B. RIM= 1288.65 INV IN = 1285.50 (15" PP) INV OUT = 1285.50 (15" PP) N: 442764.298; E: 1400428.912
122 DB	15" NYLOPLAST D.B. RIM= 1292.48 INV IN = 1288.75 (15" PP) INV OUT = 1288.75 (15" PP) N: 442733.375; E: 1400286.686
131 DB	12" NYLOPLAST D.B. W/ SOLID LID SEE DETAIL SHEET C8.4 RIM= 1292.98 INV IN = 1289.14 (12" PP) INV OUT = 1289.14 (12" PP) N: 442962.682; E: 1400237.784
132 GI	24" NYLOPLAST D.B. RIM= 1291.65 INV OUT = 1289.65 (12" PP) N: 442928.203; E: 1400141.497

FOR DETENTION INFORMATION REFER TO THE REPORT MADE BY TOTH & ASSOCIATES ON NOVEMBER 25, 2024

LEGEND

- RIGHT-OF-WAY LINE
- PROPERTY LINE
- UTILITY EASEMENT
- SD — INSTALL STORM SEWER PIPE
- W — INSTALL DOMESTIC WATER SERVICE LINE
- SS — INSTALL SANITARY SEWER SERVICE
- FO — INSTALL FIBER/OPTIC LINE
- UGE — INSTALL UNDERGROUND ELECTRIC LINE
- G — INSTALL GAS SERVICE

N

0' 10' 20' 40'
SCALE IN FEET

BENCHMARKS:

BENCHMARK #1 - TOP NUT OF FIRE HYDRANT 63' E. OF EXIST. EASTERN PROPERTY LINE & 124' SOUTH OF NORTHERN PROPERTY LINE
N: 442855.34 E: 1400549.85
ELEVATION: 1288.78

MISSOURI 811

olsson
550 East St. Louis Street
Springfield, MO 65806
olsson.com
TEL 417.890.8802
FAX 417.890.8805
Olsson, Inc. Engineering MO State Cert. of Authority #001592
Olsson, Inc. Landscape Architecture MO State Cert. of Authority #2005000285

NIXA POLICE DEPARTMENT

305 N. LEEANN DRIVE
NIXA, MO 65714

INSIGHT DESIGN IDeA ARCHITECTS
112 S. Main St., Nixa, MO 65714 Ph: 417-724-8553
CJD Engineering | Energy | Innovation
olsson
METTEMEYER ENGINEERING
Chiodini ARCHITECTS
Architecture / Interior Design / Graphics
1401 S. Brentwood Blvd. | Suite 570 St. Louis, Missouri 63144
314-725-0888 | arch@chiodini.com

Reissue Date

Professional of Record

STATE OF MISSOURI
RICKY HARRY BUMBER
PE-2019017828
06/11/2025
PROFESSIONAL ENGINEER

DATE 06/11/2025

Copyright 2024 ©
These prints are the property of the architect and shall be usedonly for the project referenced above

Drawn by
BWS

Project #
024-00531

Date
2025.06.11

Drawing Title:
STORM SEWER PLAN

Sheet:
C5.0

F:\2024\0531-01\000\024-00531\40-Design\Acad\CAD\Final Plans\Sheets\SDN\C_STM01_024005S1.dwg
DATE: Jun 10, 2025 11:05am USER: bstringer

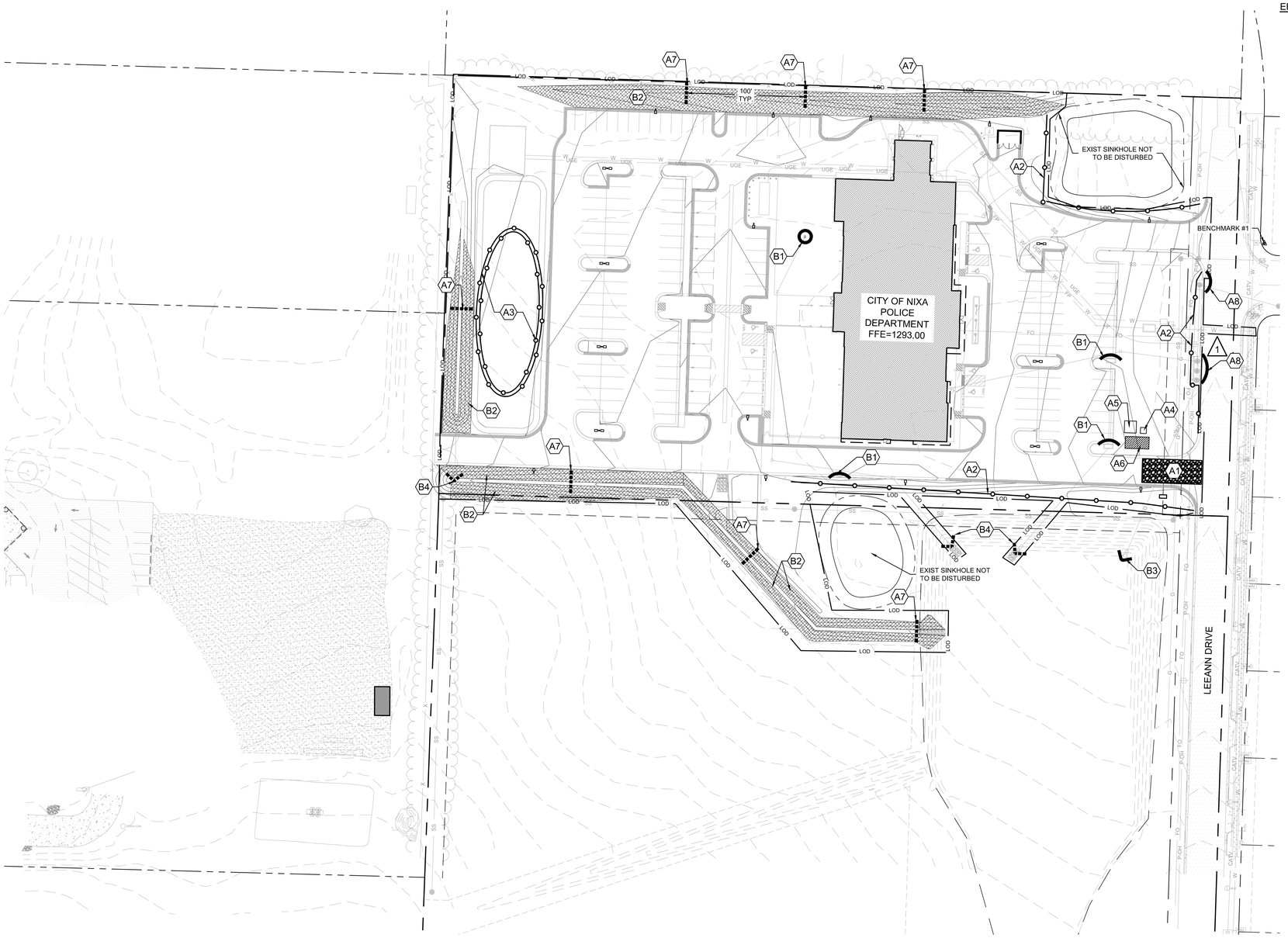

EROSION CONTROL NOTES:

1. THE CONTRACTOR SHALL BE RESPONSIBLE FOR MAINTENANCE OF ALL EROSION & SEDIMENT CONTROL MEASURES AND PRACTICES THROUGHOUT THE PROJECT. ANY AND ALL FINES ASSOCIATED WITH EROSION CONTROL VIOLATIONS WILL BE THE CONTRACTOR'S RESPONSIBILITY.
2. EROSION CONTROL IS THE CONTRACTOR'S RESPONSIBILITY. THIS PLAN SHOULD BE USED AS A GUIDE AND REPRESENTS THE MINIMUM EROSION CONTROL DEVICES REQUIRED.
3. EROSION CONTROL MEASURES WILL BE MAINTAINED AT ALL TIMES. ADDITIONAL EROSION & SEDIMENT CONTROL MEASURES WILL BE INSTALLED IF DEEMED NECESSARY BY ON-SITE INSPECTION.
4. CONTRACTOR IS RESPONSIBLE FOR REPAIRING ALL EROSION & SEDIMENT CONTROL DEVICES AFTER EACH RAINFALL EVENT.
5. THE CONTRACTOR SHALL PROVIDE ANY FURTHER EROSION CONTROL MEASURES IN ADDITION TO THOSE LISTED TO ENSURE THAT SILT WILL NOT LEAVE THE PROJECT CONFINES.
6. THE CONTRACTOR IS RESPONSIBLE FOR REMOVING THE TEMPORARY EROSION & SEDIMENT CONTROL DEVICES AFTER COMPLETION OF CONSTRUCTION AND ONLY WHEN AREAS HAVE BEEN STABILIZED WITH A HEALTHY STAND OF PERMANENT VEGETATION.
7. THE CONTRACTOR IS RESPONSIBLE FOR REMOVING SILT FROM SITE IF NOT REUSABLE ON-SITE AND ASSURING PLAN ALIGNMENT AND GRADE IN ALL DITCHES AT COMPLETION OF CONSTRUCTION.
8. THE CONTRACTOR SHALL ENSURE THAT ALL DRAINAGE STRUCTURES, FLUMES, PIPES, ETC. ARE CLEANED OUT AND WORKING PROPERLY AT TIME OF ACCEPTANCE.
9. THE CONTRACTOR SHALL PROVIDE ANY TEMPORARY STABILIZATION AS REQUIRED.
10. THE CONTRACTOR SHALL PROVIDE A TEMPORARY CONSTRUCTION ENTRANCE FOR VEHICULAR TRAFFIC AT LOCATION(S) SHOWN.
11. ALL EROSION CONTROL DEVICES SHALL CONFORM TO THE APPLICABLE SECTIONS OF THE STANDARD SPECIFICATIONS AND DESIGN CRITERIA OF THE CITY OF NIXA, MISSOURI.
12. REFERENCE DETAILS ON SHEET C6.1 FOR TYPICAL EROSION CONTROL DEVICE INSTALLATION.
13. THE CONTRACTOR WILL BE REQUIRED TO CLEAN THE STREETS OF DEPOSITED MUD AS FREQUENTLY AS NEEDED AS DETERMINED BY THE ENGINEER IN ORDER TO KEEP THEM USABLE AND TO CONTROL DUST.
14. SEE TEMPORARY VEGETATION REQUIREMENT NOTES ON SHEET C6.1 FOR EXPOSED SOIL WHERE NO ACTIVITY WILL OCCUR FOR MORE THAN 14 DAYS.
15. CONTRACTOR IS RESPONSIBLE FOR PHASED INSTALLATION OF EROSION CONTROL BMP'S IN ORDER TO PREVENT SEDIMENT FROM BREACHING THE LIMITS OF DISTURBANCE.

EROSION CONTROL PHASING CHART

PROJECT STAGE	BMP PLAN REF. #	BMP DESCRIPTION	REMOVE AFTER STAGE	NOTES:	INSTALLATION DATE / REMOVAL DATE
A - PRE-CONSTRUCTION	A1	CONSTRUCTION ENTRANCE/EXIT	C	SEE DETAIL SHEET C6.1	
	A2	TEMPORARY COMPOST FILTER SOCK	C	SEE DETAIL SHEET C6.1	
	A3	TEMPORARY STAGING/STOCKPILE AREA	C	SEE APPROX. LOCATION ON THIS SHEET	
	A4	INSTALL PORTA-POTTY(S)	C	CONTRACTOR TO MARK FINAL PLACEMENT ON ERC PLAN.	
	A5	INSTALL DUMPSTER, SITE SIGN & SPILL KIT	C	CONTRACTOR TO MARK FINAL PLACEMENT ON ERC PLAN.	
	A6	INSTALL CONCRETE WASHOUT	B	SEE DETAIL SHEET C6.1	
	A7	INSTALL TEMPORARY ROCK DITCH CHECK @ 100' MAX. DISTANCE APART	C	SEE DETAIL SHEET C6.1	
	A8	INSTALL EXIST. CURB INLET PROTECTION	C	SEE DETAIL SHEET C6.1	
B - MASS GRADING & ON-SITE IMPROVEMENTS		TEMPORARY SEEDING	N/A	PROVIDE TEMPORARY SEEDING (SEE EROSION CONTROL NOTES & TEMP. SEEDING NOTES ON SHEET C6.1)	
	B1	INSTALL INLET PROTECTION	C	SEE DETAIL SHEET C6.1	
	B2	INSTALL SLOPE REINFORCEMENT	N/A	INSTALL PER MANUFACTURERS RECOMMENDATIONS	
	B3	INSTALL WQ OUTLET PROTECTION	C	SEE DETAIL SHEET C6.1	
	B4	INSTALL FLARED END SECTION ROCK CHECK	C	SEE DETAIL SHEET C6.1	
		CONTRACTOR SHALL MAINTAIN EROSION CONTROL DEVICES THROUGHOUT CONSTRUCTION PHASE	N/A		
C - POST-CONSTRUCTION/ FINAL STABILIZATION		PLACE TOPSOIL, INSTALL EROSION CONTROL MATTING SEED, MULCH, HYDROSEED, LANDSCAPE	N/A	ESTABLISH PERENNIAL VEGETATION WITH A 70% DENSITY OVER 100% OF DISTURBED AREA. REFER TO SHEET C6.1 & SHEETS L1.0-L3.0 FOR ADDITIONAL INFORMATION.	

LEGEND

- RIGHT-OF-WAY LINE
- PROPERTY LINE
- UTILITY EASEMENT
- 1280 EXIST. CONTOUR
- 1280 FINISH GRADE CONTOUR
- LOD LIMITS OF DISTURBANCE
- INSTALL COMPOST FILTER SOCK (SEE DETAIL SHEET C6.1)
- INSTALL INLET PROTECTION (SEE DETAIL SHEET C6.1)
- INSTALL OUTLET PROTECTION (SEE DETAIL SHEET C6.1)
- INSTALL ROCK DITCH CHECK (SEE DETAIL SHEETC6.1)
- INSTALL GRAVEL CONSTRUCTION ENTRANCE/EXIT (SEE DETAIL SHEET C6.1)
- INSTALL CONCRETE WASHOUT (SEE DETAIL SHEET C6.1)
- # STORM OUTFALL
- INSTALL NORTH AMERICAN GREEN SC-150 EROSION CONTROL BLANKET PER MANUFACTURER'S RECOMMENDATIONS ON SLOPES 4:1 OR STEEPER. ECB SHALL BE INSTALLED INCREMENTALLY AS FILL IS ADDED.

LAND DISTURBANCE:
PROPERTY AREA: 5.34 AC
TOTAL DISTURBED AREA: 5.17± AC

BENCHMARKS:

BENCHMARK #1 - TOP NUT OF FIRE HYDRANT 63' E. OF EXIST. EASTERN PROPERTY LINE & 124' SOUTH OF NORTHERN PROPERTY LINE
N: 442855.34 E: 1400549.85
ELEVATION: 1288.78

N
0' 20' 40' 80'
SCALE IN FEET

MISSOURI 811
olsson
Olsson, Inc. Engineering MO State Cert. of Authority #001592
Olsson, Inc. Landscape Architecture MO State Cert. of Authority #2005000285
550 East St. Louis Street
Springfield, MO 65806
olsson.com
TEL 417.890.8802
FAX 417.890.8805

NIXA POLICE DEPARTMENT

305 N. LEEANN DRIVE
NIXA, MO 65714

INSIGHT DESIGN IDeA ARCHITECTS
112 S. Main St., Nixa, MO 65714 Ph: 417-724-8553
CJD Engineering | Energy | Innovation
olsson
METTEMEYER ENGINEERING
Chipdine ARCHITECTS
Architecture / Interior Design / Graphics
1401 S. Brentwood Blvd. - Suite 575 | St. Louis, Missouri 63144
314-255-0880 | info@chipdine.com

Reissue Date

Professional of Record

STATE OF MISSOURI
RICKY HAAS
PE-2019017828
06/11/2025
PROFESSIONAL ENGINEER

DATE 06/11/2025

Copyright 2024 ©
These prints are the property of the architect and shall be usedonly for the project referenced above

Drawn by
BWS

Project #
024-00531

Date
2025.06.11

Drawing Title:
EROSION CONTROL PLAN

Sheet:
C6.0

F:\2024\00531-01\000\024-00531\140-Design\AutoCAD\Final Plans\Sheets\SDNC_ERC01_024005S1.dwg
DATE: Jun 10, 2025 11:08am USER: bstringer

EROSION CONTROL NOTES:

1. THE CONTRACTOR SHALL BE RESPONSIBLE FOR MAINTENANCE OF ALL EROSION & SEDIMENT CONTROL MEASURES AND PRACTICES THROUGHOUT THE PROJECT. ANY AND ALL FINES ASSOCIATED WITH EROSION CONTROL VIOLATIONS WILL BE THE CONTRACTOR'S RESPONSIBILITY.
2. EROSION CONTROL IS THE CONTRACTOR'S RESPONSIBILITY. THIS PLAN SHOULD BE USED AS A GUIDE AND REPRESENTS THE MINIMUM EROSION CONTROL DEVICES REQUIRED.
3. EROSION CONTROL MEASURES WILL BE MAINTAINED AT ALL TIMES. ADDITIONAL EROSION & SEDIMENT CONTROL MEASURES WILL BE INSTALLED IF DEEMED NECESSARY BY ON-SITE INSPECTION.
4. CONTRACTOR IS RESPONSIBLE FOR REPAIRING ALL EROSION & SEDIMENT CONTROL DEVICES AFTER EACH RAINFALL EVENT.
5. THE CONTRACTOR SHALL PROVIDE ANY FURTHER EROSION CONTROL MEASURES IN ADDITION TO THOSE LISTED TO ENSURE THAT SILT WILL NOT LEAVE THE PROJECT CONFINES.
6. THE CONTRACTOR IS RESPONSIBLE FOR REMOVING THE TEMPORARY EROSION & SEDIMENT CONTROL DEVICES AFTER COMPLETION OF CONSTRUCTION AND ONLY WHEN AREAS HAVE BEEN STABILIZED WITH A HEALTHY STAND OF PERMANENT VEGETATION.
7. THE CONTRACTOR IS RESPONSIBLE FOR REMOVING SILT FROM SITE IF NOT REUSABLE ON-SITE AND ASSURING PLAN ALIGNMENT AND GRADE IN ALL DITCHES AT COMPLETION OF CONSTRUCTION.
8. THE CONTRACTOR SHALL ENSURE THAT ALL DRAINAGE STRUCTURES, FLUMES, PIPES, ETC. ARE CLEANED OUT AND WORKING PROPERLY AT TIME OF ACCEPTANCE.
9. THE CONTRACTOR SHALL PROVIDE ANY TEMPORARY STABILIZATION AS REQUIRED.
10. THE CONTRACTOR SHALL PROVIDE A TEMPORARY CONSTRUCTION ENTRANCE FOR VEHICULAR TRAFFIC AT LOCATION SHOWN.
11. ALL EROSION CONTROL DEVICES SHALL CONFORM TO THE APPLICABLE SECTIONS OF THE STANDARD SPECIFICATIONS AND DESIGN CRITERIA OF THE CITY OF NIXA TECH-SPEC BOOK AND DRAWINGS
12. REFERENCE DETAILS ON SHEET C6.0 FOR TYPICAL EROSION CONTROL DEVICE INSTALLATION.
13. THE CONTRACTOR WILL BE REQUIRED TO CLEAN THE STREETS OF DEPOSITED MUD AS FREQUENTLY AS NEEDED AS DETERMINED BY THE ENGINEER IN ORDER TO KEEP THEM USABLE AND TO CONTROL DUST.
14. SEE TEMPORARY VEGETATION REQUIREMENT NOTES ON THIS SHEET FOR EXPOSED SOIL WHERE NO ACTIVITY WILL OCCUR FOR MORE THAN 14 DAYS.
15. CONTRACTOR IS RESPONSIBLE FOR PHASED INSTALLATION OF EROSION CONTROL BMP'S IN ORDER TO PREVENT SEDIMENT FROM BREACHING THE LIMITS OF DISTURBANCE.

TEMPORARY & PERMANENT VEGETATION REQUIREMENTS:

TOPSOIL REQUIREMENTS:

PERMANENT AND TEMPORARY SEEDING -
LOOSEN COMPACTED SOILS TO A DEPTH OF 4 INCHES. IF RAINFALL CAUSES THE SURFACE TO BECOME SEALED OR CRUSTED, LOOSEN IT JUST PRIOR TO SEEDING. SLOPES STEEPER THAN 33 PERCENT (3:1) GRADE SHOULD BE GROOVED OR FURROWED ON THE CONTOUR BEFORE SEEDING. A GOOD SEEDBED IS WELL PULVERIZED, LOOSE, AND UNIFORM.

PERMANENT SEEDING -
A MINIMUM OF 4 INCHES OF LOOSE TOPSOIL SHOULD BE SPREAD ON AREAS TO BE SEEDED.

LIME REQUIREMENTS:

PERMANENT AND TEMPORARY SEEDING -
LIME SHOULD BE APPLIED ACCORDING TO SOIL TEST RECOMMENDATIONS. IF THE PH OF THE SOIL IS UNKNOWN, LIME SHALL BE INCORPORATED INTO THE TOP 4 INCHES OF SOIL AT THE RATE OF 1500 POUNDS EFFECTIVE NEUTRALIZING MATERIAL (ENM) PER ACRE. SOILS WITH A PH OF SIX OR HIGHER NEED NOT BE LIMED.

FERTILIZER REQUIREMENTS:

PERMANENT SEEDING -
FERTILIZER SHOULD BE APPLIED BASED ON SOIL TESTS. WHEN THESE ARE NOT POSSIBLE, A 13-13-13 GRADE FERTILIZER SHALL BE INCORPORATED INTO THE TOP 4 INCHES OF SOIL AT THE RATE OF 500 POUNDS PER ACRE.

TEMPORARY SEEDING -
FERTILIZER SHOULD BE APPLIED BASED ON SOIL TESTS. WHEN THESE ARE NOT POSSIBLE, A 10-10-10 GRADE FERTILIZER SHALL BE INCORPORATED INTO THE TOP 4 INCHES OF SOIL AT THE RATE OF 200 POUNDS PER ACRE.

SEED REQUIREMENTS:

PERMANENT SEEDING -
SEED MIX SHALL CONSIST OF NINETY PERCENT (90%) TALL FESCUE AND TEN PERCENT (10%) ANNUAL RYEGRASS. SEED MIXTURE SHALL BE APPLIED AT A RATE OF 400 POUNDS PER ACRE.

TEMPORARY SEEDING - SEED MIX SHALL CONSIST OF ANY COMBINATION OF TALL FESCUE, ANNUAL RYEGRASS, SUDAN, MILLET, WHEAT, OR OATS. SEED MIXTURE SHALL BE APPLIED AT A RATE OF 200 POUNDS PER ACRE.

DORMANT SEASON SEEDING - SEED MIX SHALL CONSIST OF 80 PERCENT (80%) TALL FESCUE, TEN PERCENT (10%) ANNUAL RYEGRASS, AND TEN PERCENT (10%) SPRING OATS. SEED MIXTURE SHALL BE APPLIED AT A RATE OF 600 POUNDS PER ACRE.

MULCH REQUIREMENTS:

PERMANENT AND TEMPORARY SEEDING -
WHERE SLOPES ARE LESS THAN 25 PERCENT (4:1) GRADE, CEREAL GRAIN MULCH IS REQUIRED AT THE RATE OF 100 POUNDS PER 1,000 SQUARE FEET (4,500 LBS/ACRE). CEREAL GRAIN MULCH SHALL MEET THE REQUIREMENTS OF SECTION 802 OF THE MISSOURI STATE SPECIFICATIONS FOR HIGHWAY CONSTRUCTION FOR TYPE 1 MULCH. WHERE SLOPES ARE 25 PERCENT (4:1) OR GREATER GRADE, TYPE 3 MULCH ("HYDROMULCH") MEETING THE REQUIREMENTS OF SECTION 802 OF THE STATE SPECIFICATIONS SHALL BE USED. TYPE 3 MULCH SHALL BE APPLIED AT A MINIMUM RATE OF 2,000 LBS/ACRE.

DATES FOR SEEDING:

PERMANENT SEEDING - MARCH 1 TO JUNE 1 AND AUGUST 15 TO NOVEMBER 1
TEMPORARY SEEDING - CAN OCCUR DURING ANY SEASON, HOWEVER WINTER IS THE LEAST TOLERANT.
DORMANT SEASON SEEDING - DECEMBER 15 TO FEBRUARY 29

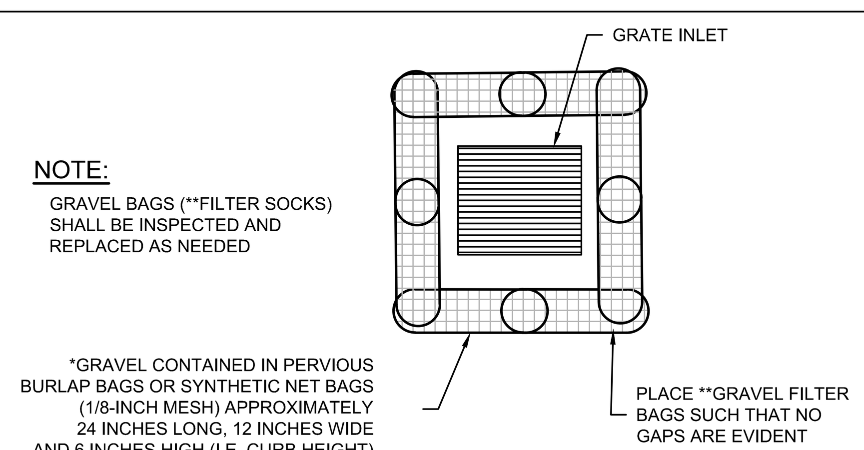

NOTE:
GRAVEL BAGS (**FILTER SOCKS) SHALL BE INSPECTED AND REPLACED AS NEEDED

* 5/8 - 1 1/2" CRUSHED LIMESTONE

** COMPOST FILTER SOCKS MAY BE USED IN LIEU OF GRAVEL BAGS

GRATE INLET PROTECTION DETAIL
NOT TO SCALE

POLLUTION PREVENTION PROCEDURE NOTES:

1. HANDLING AND DISPOSAL OF HAZARDOUS MATERIALS:

DO:
PREVENT SPILLS
USE PRODUCTS UP
FOLLOW LABEL DIRECTIONS FOR DISPOSAL
REMOVE LIDS FROM EMPTY BOTTLES AND CANS WHEN DISPOSING TRASH
RECYCLE WASTES WHENEVER POSSIBLE

DON'T:
DON'T POUR WASTE INTO SEWERS OR WATERWAYS ON THE GROUND
DON'T POUR WASTE DOWN THE SINK, FLOOR DRAIN OR SEPTIC TANKS
DON'T BURY CHEMICALS OR CONTAINERS, OR DISPOSE OF THEM WITH OTHER WASTE
DON'T BURN OR MIX CHEMICALS OR CONTAINERS
DON'T WASH SEDIMENT DOWN STORM SEWER INLETS

2. CONTAINERS SHALL BE PROVIDED FOR COLLECTION OF ALL WASTE MATERIAL INCLUDING CONSTRUCTION DEBRIS, TRASH, PETROLEUM PRODUCTS AND ANY HAZARDOUS MATERIALS TO BE USED ONSITE. ALL WASTE MATERIAL SHALL BE DISPOSED OF AT FACILITIES APPROVED FOR THAT MATERIAL.
3. NO WASTE MATERIALS SHALL BE BURIED ON-SITE.
4. MIXING, PUMPING, TRANSFERRING OR OTHERWISE HANDLING CONSTRUCTION CHEMICALS SUCH AS FERTILIZER, LIME, ASPHALT, CONCRETE DRYING COMPOUNDS, AND ALL OTHER POTENTIALLY HAZARDOUS MATERIALS SHALL BE PERFORMED IN AN AREA AWAY FROM ANY WATERCOURSE, DITCH OR STORM DRAIN.
5. EQUIPMENT FUELING AND MAINTENANCE, OIL CHANGING, ETC., SHALL BE PERFORMED ONLY IN AN AREA DESIGNATED FOR THAT PURPOSE. THE DESIGNATED AREA SHALL BE EQUIPPED FOR RECYCLING OIL AND CATCHING SPILLS.
6. CONCRETE WASH WATER SHALL NOT BE ALLOWED TO FLOW DIRECTLY TO STORM SEWERS, STREAMS, DITCHES, LAKES, ETC WITHOUT BEING TREATED. A CONCRETE WASHOUT AREA SHALL BE PROVIDED. SEE DETAIL ON THIS SHEET.
7. ALL PAINT, SOLVENTS, PETROLEUM PRODUCTS AND PETROLEUM WASTE PRODUCTS, AND STORAGE CONTAINERS (SUCH AS DRUMS, CANS, OR CARTONS) SHALL BE STORED ACCORDING TO BMPS. THE MATERIALS EXPOSED TO PRECIPITATION SHALL BE STORED IN WATERTIGHT, STRUCTURALLY SOUND, CLOSED CONTAINERS. ALL CONTAINERS SHALL BE INSPECTED FOR LEAKS OR SPILLAGE DURING THE ONCE PER WEEK INSPECTION OF BMPS. IF SUBSTANCES SUCH AS OIL, DIESEL FUEL, HYDRAULIC FLUID, ANTIFREEZE, ETC. ARE SPILLED, LEAKED, OR RELEASED ONTO SOIL, THE SOIL SHALL BE DUG UP AND PROPERLY DISPOSED OF. SPILLS ON PAVEMENT SHALL BE ABSORBED WITH SAWDUST, KITTY LITTER OR PRODUCT DESIGNED FOR THAT PURPOSED AND DISPOSED OF AT A LICENSED SANITARY LANDFILL. HAZARDOUS OR INDUSTRIAL WASTES SUCH AS MOST SOLVENTS, GASOLINE, OIL-BASED PAINTS, AND CEMENT CURING COMPOUNDS REQUIRE SPECIAL HANDLING. THESE MATERIALS WILL BE REMOVED FROM THE SITE AND RECYCLED OR DISPOSED OF IN ACCORDANCE WITH MoDNR REQUIREMENTS.
8. STATE LAW REQUIRES THE PARTY RESPONSIBLE FOR A PETROLEUM PRODUCT SPILL IN EXCESS OF 50 GALLONS TO REPORT THE SPILL TO MoDNR (573-634-2436) AS SOON AS PRACTICAL AFTER DISCOVERY. FEDERAL LAW REQUIRES THE RESPONSIBLE PARTY TO REPORT ANY RELEASE OF OIL IF IT REACHES OR THREATENS A SEWER, LAKE, CREEK, STREAM, RIVER, GROUNDWATER, WETLAND, OR AREA, LIKE A ROAD DITCH, THAT DRAINS INTO ONE OF THE ABOVE.
9. SUFFICIENT TEMPORARY TOILET FACILITIES TO SERVE THE NUMBER OF WORKERS ON THE SITE SHALL BE PROVIDED. THE FACILITIES SHALL BE SERVICED FREQUENTLY TO MAINTAIN A SANITARY CONDITIONS.

NOTES:
1. COMPOST FILTER SOCK SHALL MEET THE REQUIREMENTS OF MoDOT SECTION 806.8.6.4.8. CONTRACTOR SHALL SUBMIT SHOP DRAWINGS TO ENGINEER FOR APPROVAL BEFORE INSTALLING SOCK.
3. COMPOST MATERIAL TO BE DISPERSED ON SITE, AS DETERMINED BY ENGINEER.
4. SEDIMENT SHOULD BE REMOVED FROM BEHIND THE HEADWALL PROTECTION ONCE THE ACCUMULATED HEIGHT HAS REACHED 1/2 THE HEIGHT OF THE STACKED FILTER SOCKS.

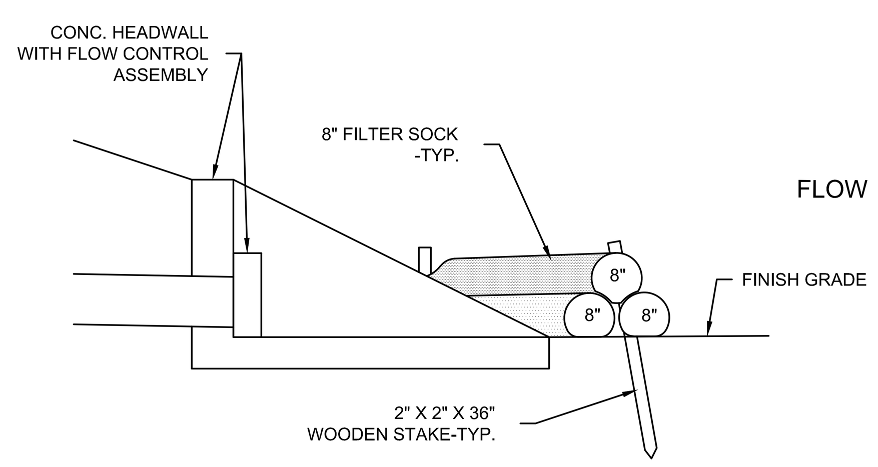

SECTION

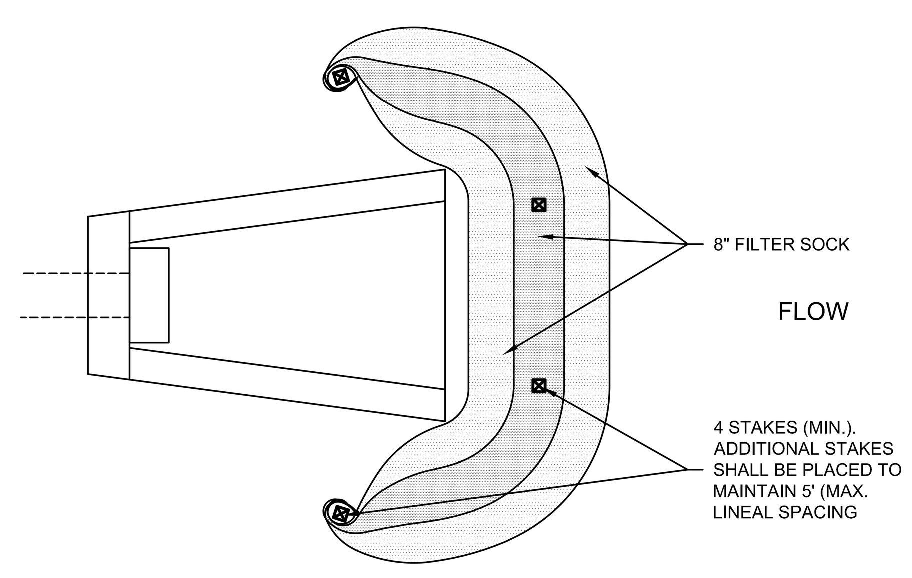

PLAN

HEADWALL OUTLET PROTECTION DETAILS
NOT TO SCALE

NOTES:
1. INSTALL AS SOON AS POSSIBLE BEFORE START OF GRADING
2. PLACE FILTER FABRIC UNDER STONE
3. USE 3"-6" CLEAN CRUSHED LIMESTONE
4. REPLACE AS NEEDED TO MAINTAIN 6" DEPTH

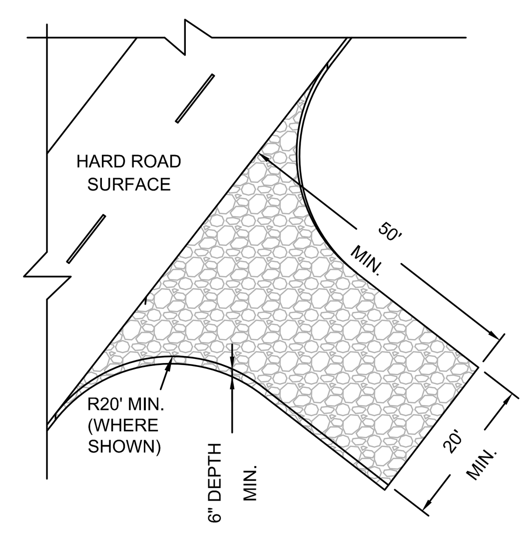

GRAVEL CONSTRUCTION ENTRANCE / EXIT
NOT TO SCALE

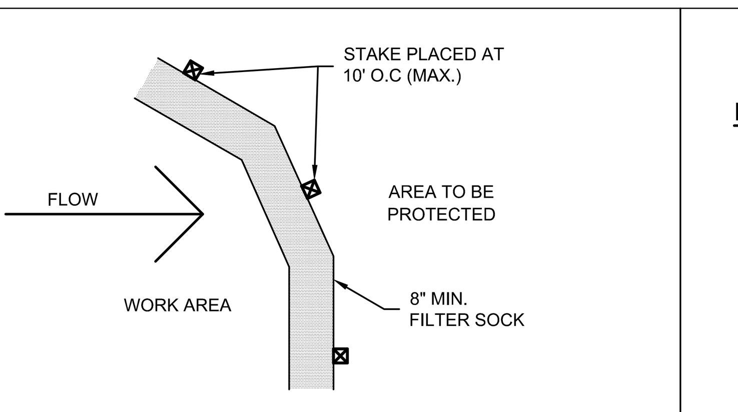

PLAN VIEW

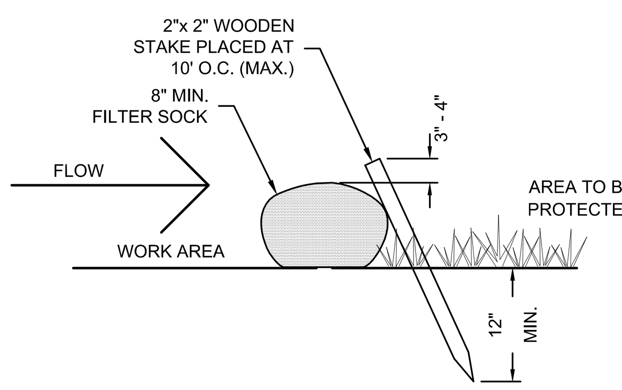

SECTION VIEW

NOTES:
1. COMPOST FILTER SOCK SHALL MEET THE REQUIREMENTS OF MoDOT SECTION 806.8.6.4.8. CONTRACTOR SHALL SUBMIT SHOP DRAWINGS TO ENGINEER FOR APPROVAL BEFORE INSTALLING SOCK.
2. FILTER SOCK DEPICTED IS FOR MINIMUM SLOPES. GREATER SLOPES MAY REQUIRE LARGER SOCKS PER ENGINEER.
3. COMPOST MATERIAL TO BE DISPERSED ON SITE, AS DETERMINED BY ENGINEER.

COMPOST FILTER SOCK DETAILS
NOT TO SCALE

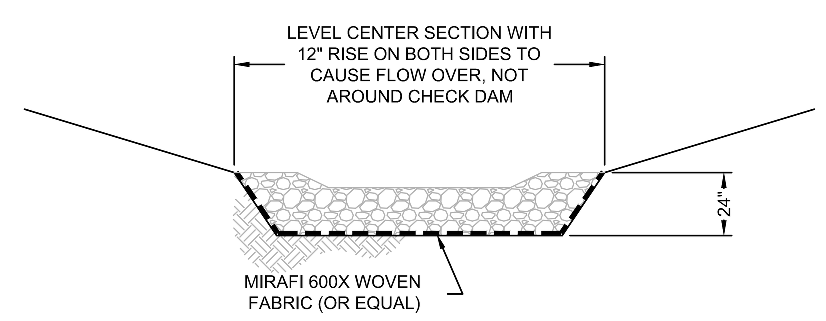

SECTION A-A

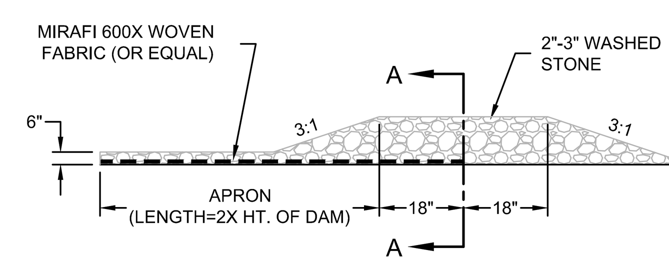

PROFILE

ROCK DITCH CHECK DETAILS
NOT TO SCALE

NOTES:
1. TEMPORARY ROCK CHECK FILTER SHALL BE INSTALLED AFTER FLARED END SECTION IS INSTALLED AND SHALL TRAP SEDIMENT DURING STORM PIPE INSTALLATION.
2. ROCK SIZE AND QUANTITY SHALL BE SIZED TO FILTER STORMWATER RUNOFF VOLUME.
3. NONWOVEN FILTER FABRIC SHALL BE INSTALLED FIRST. ONCE ROCK IS INSTALLED WRAP FILTER FABRIC OVER ROCK TO COVER.
4. ALL FLOW SHALL PASS THROUGH ROCK CHECK FILTER.
5. SEDIMENT ACCUMULATION SHALL BE REMOVED AFTER RAIN EVENTS AND SHALL NOT EXCEED 50%.
6. ROCK CHECK FILTER SHALL BE REMOVED ONCE AREA UPSTREAM OF PIPE IS PERMANENTLY STABILIZED.

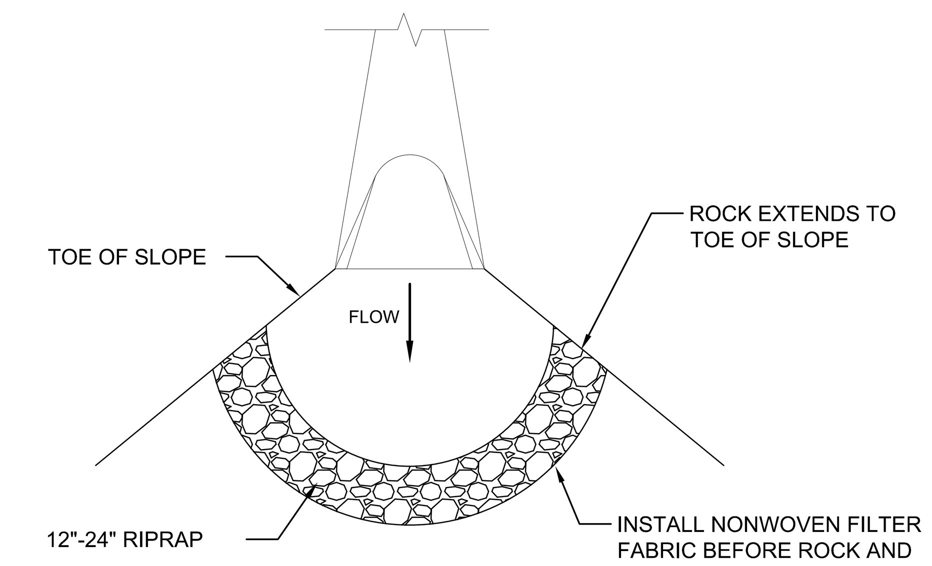

PLAN VIEW

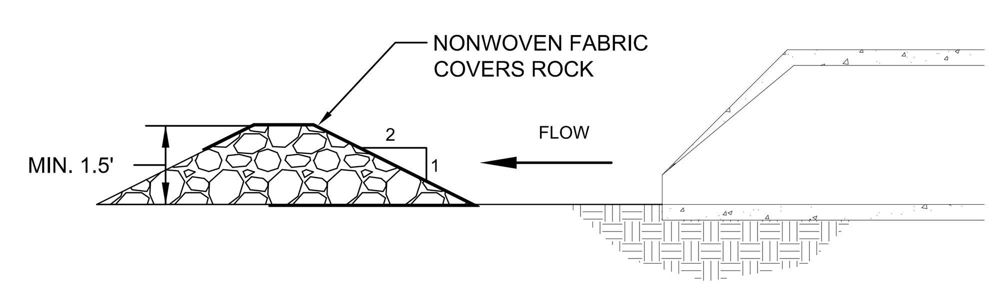

PROFILE VIEW

F.E.S. ROCK CHECK FILTER DETAILS
NOT TO SCALE

NOTES:
1. ACTUAL LAYOUT LOCATIONS & NUMBER OF WASH-OUTS TO BE DETERMINED BY CONTRACTOR IN FIELD.
2. THE CONCRETE WASH-OUT SIGN SHALL BE INSTALLED WITHIN 30 FT. OF THE TEMPORARY CONCRETE WASHOUT FACILITY.
3. WASH-OUTS SHALL BE LOCATED A MINIMUM OF 50 FT. FROM STORM DRAINS, OPEN DRAINAGE FACILITIES AND WATER COURSES. AVOID MIXING EXCESS AMOUNTS OF FRESH CONCRETE.
4. INSTALL BEFORE THE START OF ANY CONCRETE ACTIVITIES OR DELIVERIES.
5. INSPECT EVERY WEEK AND AFTER ½" STORM EVENT. REMOVE AND DISPOSE OF HARDENED CONCRETE AND RETURN THE FACILITY TO A FUNCTIONAL CONDITION. WASH-OUT FACILITIES MUST BE CLEANED, OR NEW FACILITIES MUST BE CONSTRUCTED AND READY FOR USE ONCE THE WASH-OUT IS 75% FULL.
6. WHEN TEMPORARY CONCRETE WASH-OUT FACILITIES ARE NO LONGER REQUIRED FOR THE WORK, THE HARDENED CONCRETE SHOULD BE REMOVED AND DISPOSED. MATERIALS USED TO CONSTRUCT TEMPORARY CONCRETE WASH-OUT FACILITIES SHALL BE REMOVED FROM THE SITE AND DISPOSED. HOLES, DEPRESSIONS OR OTHER GROUND DISTURBANCE CAUSED BY THE REMOVAL OF THE WASH-OUT SHALL BE BACKFILLED AND REPAIRED.

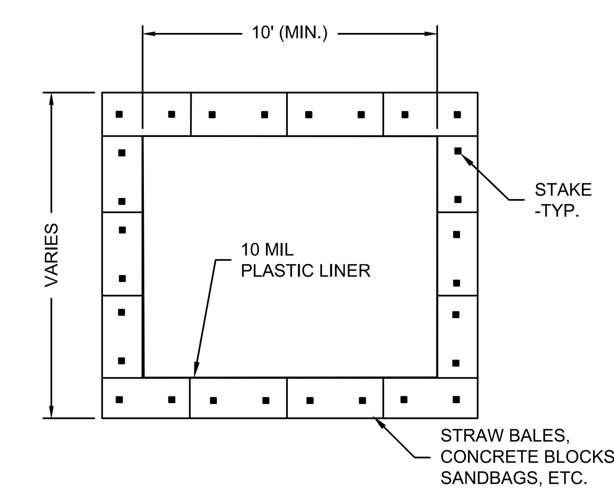

PLAN

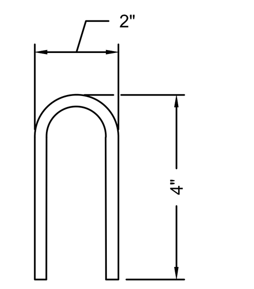

STAPLE

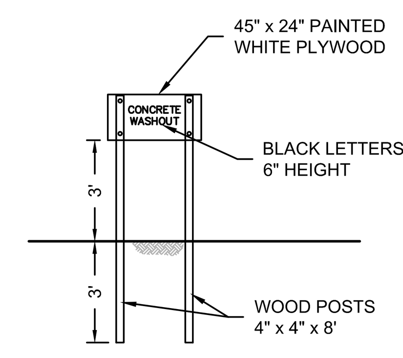

WASHOUT SIGN

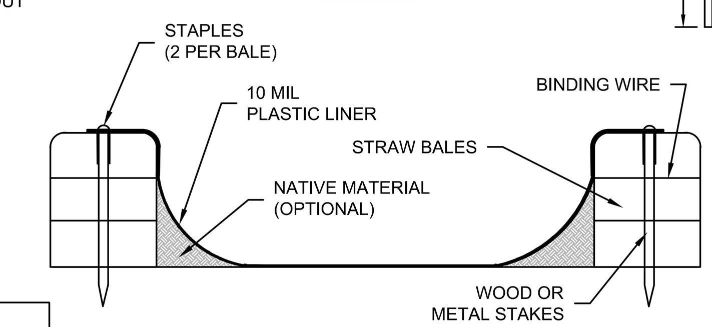

SECTION

CONCRETE WASH-OUT DETAIL
NOT TO SCALE

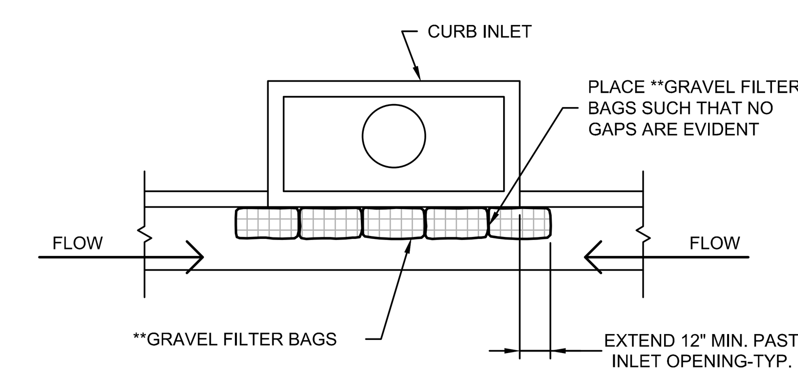

PLAN VIEW ON GRADE OR @ SUMP

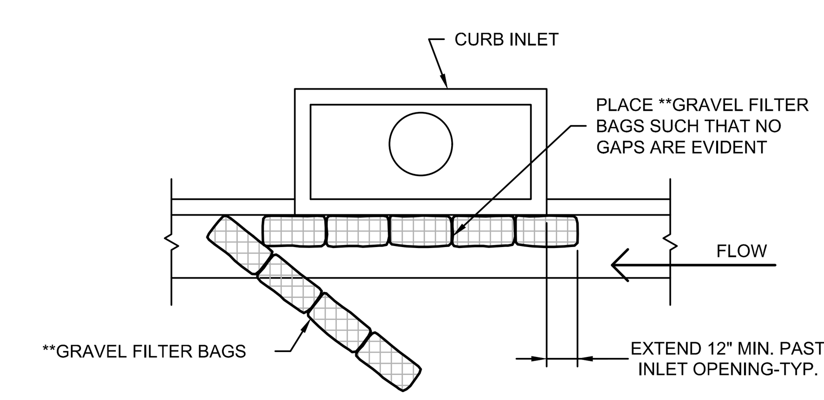

PLAN VIEW @ END OF DRIVE

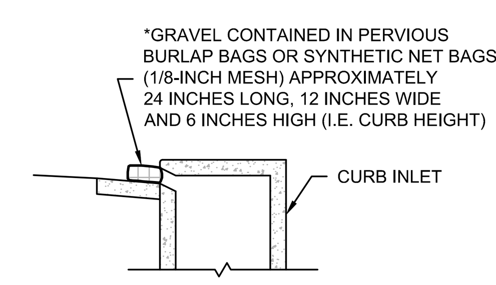

SECTION VIEW

NOTE:
GRAVEL BAGS (**FILTER SOCKS) SHALL BE INSPECTED AND REPLACED AS NEEDED

* 5/8 - 1 1/2" CRUSHED LIMESTONE

** COMPOST FILTER SOCKS MAY BE USED IN LIEU OF GRAVEL BAGS

CURB INLET SEDIMENT TRAP DETAILS
NOT TO SCALE

550 East St. Louis Street
Springfield, MO 65806
olsson.com
TEL 417.890.8802
FAX 417.890.8805
Olsson, Inc. Engineering MO State Cert. of Authority #001592
Olsson, Inc. Landscape Architecture MO State Cert. of Authority #2005000285

NIXA POLICE DEPARTMENT
305 N. LEEANN DRIVE
NIXA, MO 65714

112 S. Main St., Nixa, MO 65714 Ph: 417-724-8553
CJD Engineering | Energy | Innovation
METTEMEYER ENGINEERING LLC
Chiodini ARCHITECTS
Architecture / Interior Design / Graphics
1401 S. Brentwood Blvd. / Suite 575 / St. Louis, Missouri 63144
314-725-5588 / arch@chiodini.com

Reissue Date

Professional of Record

STATE OF MISSOURI
RICKY HAASE
NUMBER PE-2019017828
06/11/2025
PROFESSIONAL ENGINEER

DATE 06/11/2025

Copyright 2024 ©
These prints are the property of the architect and shall be usedonly for the project referenced above

Drawn by: BWS

Project #: 024-00531

Date: 2025.06.11

Drawing Title: EROSION CONTROL DETAILS

Sheet: C6.1

F:\2024\00501-01000\024-00531\40-Design\AutoCAD\Final Plans\Sheets\SD\C_ERC01_02400531.dwg
DATE: Jun 10, 2025 11:08am USER: bstringer

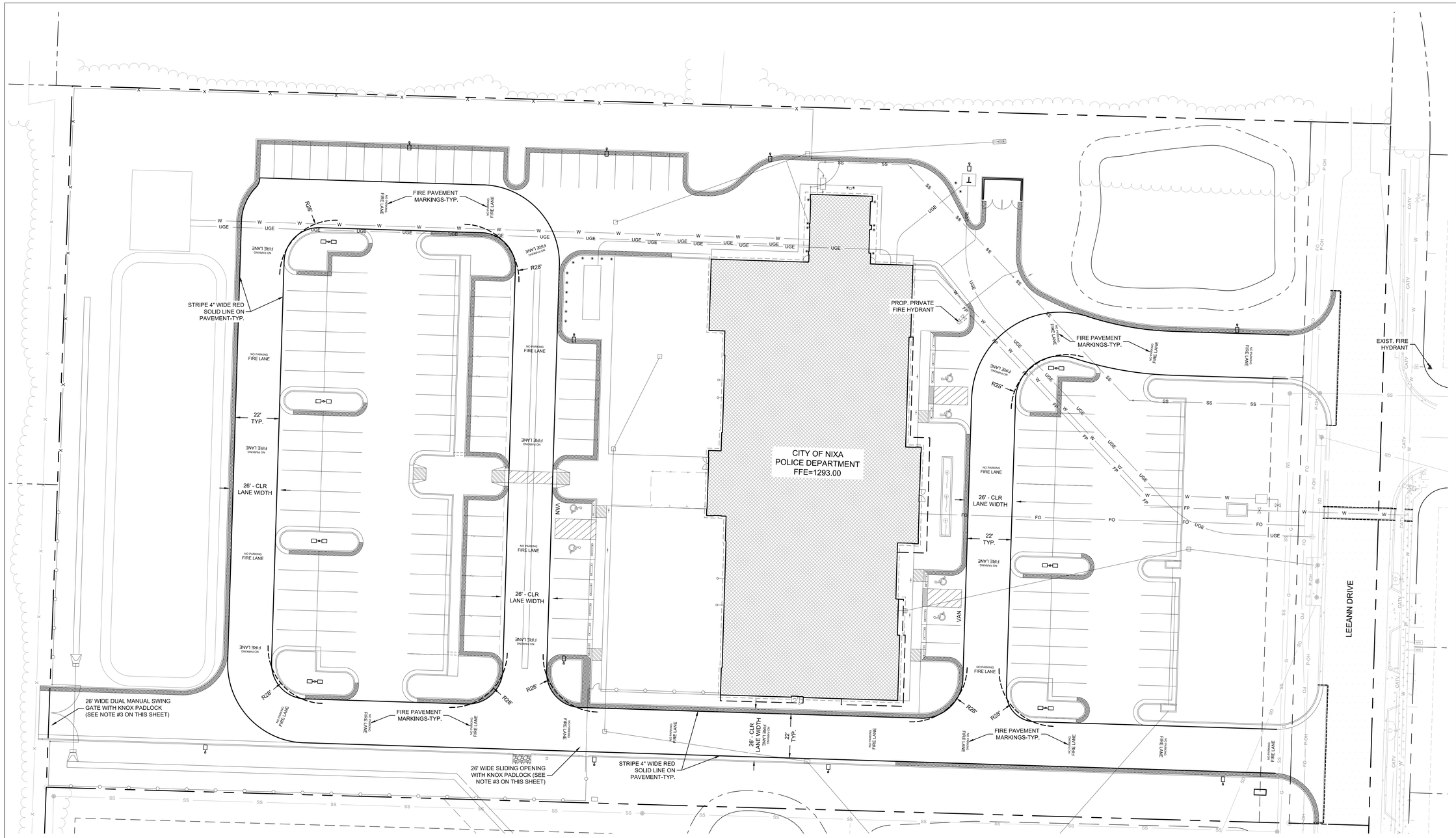

FIRE FLOW CALCULATIONS:

PER 2018 IFC SECTION B105, THE REQUIRED FLOW IS AS FOLLOWS:

PROPOSED BUILDING 21,280 SF., TYPE II-B CONSTRUCTION, FULLY SPRINKLED:
*3,000 GPM FOR 3 HOUR DURATION.

*A 75% REDUCTION IS ALLOWED DUE TO BEING FULLY SPRINKLED, BRINGING THE REQUIRED FLOW DOWN TO 750 GPM. THE MINIMUM REQUIRED PER FIRE CODE IS 1,000 GPM.

PER 2018 IFC SECTIONS C103, C104 AND C105, THE NUMBER OF HYDRANTS REQUIRED IS 1. THERE IS 1 EXISTING FIRE HYDRANT LOCATED APPROXIMATELY 56' EAST OF THE EASTERN PROPERTY LINE, ACROSS N. LEANN DR. A NEW PROPOSED HYDRANT TO BE INSTALLED 24' EAST OF THE BUILDING.

FLOW TEST AND PRESSURE READINGS WERE PROVIDED BY THE CITY OF NIXA (TESTED 06/05/2025).

HYDRANT FLOW TEST RESULTS:
FLOW 1,100 GPM
RESIDUAL PRESSURE 50 PSI
STATIC PRESSURE 57 PSI
CALCULATED FLOW:
QR = QF x (HR/HF)^0.54

QR = FLOW AVAILABLE AT DESIRED RESIDUAL PRESSURE (DESIRED RESIDUAL PRESSURE = 20 PSI)
QF = FLOW OBTAINED DURING FLOW TEST
HR = PRESSURE DROP TO THE DESIRED RESIDUAL PRESSURE
HF = PRESSURE DROP DURING THE TEST

QR = 1,100 GPM x [57 PSI - 20 PSI)/
(57 PSI - 50 PSI)]^0.54

QR = 2,703 GPM

EMERGENCY VEHICLE ACCESS NOTES:

1. FIRE APPARATUS ACCESS LANES SHALL BE MARKED WITH 4" RED STRIPING ON BOTH SIDES OF THE FIRE LANE ALONG THE ENTIRE LENGTH OF THE LANE AND "NO PARKING FIRE LANE" SHALL BE STENCILED IN 12" LETTERS EVERY 50' IN THE CENTER OF THE FIRE LANE (PERPENDICULAR TO TRAFFIC FLOW AND IN ALTERNATING DIRECTIONS).
2. THE MINIMUM FIRE DEPARTMENT APPARATUS ACCESS REQUIREMENTS INCLUDE A MINIMUM 20- OR 26-FEET ROAD WIDTH, 28 FT. INSIDE TURNING RADII, REQUIRED FIRE LANE MARKING, AN 8% OR LESS GRADE, A FIRE APPARATUS TURN AROUND IF >150 FEET IN LENGTH WITH A DEAD END, & CAPABILITY OF SUPPORTING 85,000 LB FIRE APPARATUS-IMPOSED LOAD. (2018 IFC SECTION 503, APPENDIX D, & CITY ORDINANCE 6675).
3. ANY ACCES GATE OPENING SHALL BE A MINIMUM OF 20 FEET IN WIDTH (SEE PLANS FOR ACTUAL WIDTH) LOCKED WITH A KNOX PADLOCK INTERCONNECTED WITH OWNER'S PADLOCK SO THAT REMOVAL OF EITHER LOCK CAN OPEN THE GATE

LEGEND

RIGHT-OF-WAY LINE
PROPERTY LINE
UTILITY EASEMENT
PROPOSED FIRE HYDRANT

FIRE CODE LANDSCAPE GUIDELINES:

1. COMBUSTIBLE LANDSCAPING MATERIALS SHALL NOT BE WITHIN 18 INCHES OF ANY COMMERCIAL BUILDING. (2018 IFC AMENDED 320.4)
2. COMBUSTIBLE LANDSCAPING MATERIALS SHALL NOT BE WITHIN 18 INCH RADIUS AROUND GAS METERS. (2018 IFC AMENDED 320.4)
3. RECEPTACLES FOR DISCARDED SMOKING MATERIALS SHALL BE NO CLOSER THAN 18 INCHES TO COMBUSTIBLE LANDSCAPE MATERIAL/MULCH AND SHALL BE EMPTIED REGULARLY. (2018 IFC AMENDED 320.5)

FIRE LANE LEGEND

LIMITS OF EMERGENCY ACCESS SHALL BE DEMARCATED ON BOTH SIDES BY A SINGLE 4" WIDE RED SOLID PAINTED LINE

NO PARKING FIRE LANE — 12" MIN. HEIGHT FIRE LANE TEXT SHALL BE PAINTED RED AND OCCUR EVERY 50' O.C. MAX SPACING W/ ALTERNATING DIRECTIONS EVERY OTHER MARKING

N

0' 10' 20' 40'
SCALE IN FEET

Olsson, Inc. Engineering MO State Cert. of Authority #001592
Olsson, Inc. Landscape Architecture MO State Cert. of Authority #2005000285

550 East St. Louis Street
Springfield, MO 65806
olsson.com
TEL 417.890.8802
FAX 417.890.8805

NIXA POLICE DEPARTMENT

305 N. LEEANN DRIVE
NIXA, MO 65714

INSIGHT DESIGN IDeA ARCHITECTS
112 S. Main St., Nixa, MO 65714 Ph: 417-724-8553

CJD Engineering | Energy | Innovation

olsson

METTEMEYER ENGINEERING

Chiodini ARCHITECTS
Architecture / Interior Design / Graphics
1401 S. Brentwood Blvd.; Suite 375 St. Louis, Missouri 63144
314-725-0888 pam@chiodini.com

Reissue Date

Professional of Record

STATE OF MISSOURI
RICKY HAAS
PE-2019017828
06/11/2025
PROFESSIONAL ENGINEER

DATE 06/11/2025

Copyright 2024 ©

These prints are the property of the architect and shall be usedonly for the project referenced above

Drawn by
BWS

Project #
024-00531

Date
2025.06.11

Drawing Title:
EMERGENCY VEHICLE ACCESS PLAN

Sheet:
C7.0

F:\2024\00531-01\000\024-00531\40-Design\AutoCAD\Final Plans\Sheets\SDNG_E\A01_02400531.dwg
DATE: Jun 10, 2025 11:10am USER: bplinger

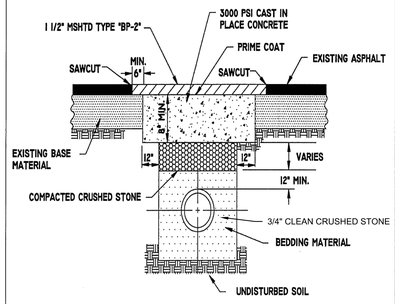

NIXA	ASPHALT STREET REPAIR	01/31/99
		D13

NOTES:

1. EVENLY SPACE TOOLED JOINTS EQUAL TO WIDTH OF SIDEWALKS UP TO 12'-0".
2. SEE ARCH. PLANS FOR JOINTING TYPES & PATTERNS

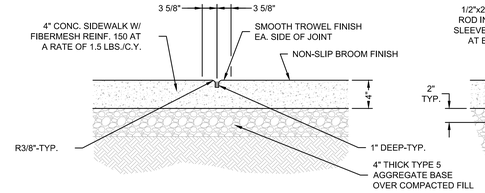

SIDEWALK & TOOLED CONTROL JOINT DETAIL

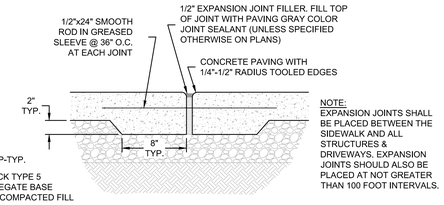

NOTE:
EXPANSION JOINTS SHALL BE PLACED BETWEEN THE SIDEWALK AND ALL STRUCTURES & DRIVEWAYS. EXPANSION JOINTS SHOULD ALSO BE PLACED AT NOT GREATER THAN 100 FOOT INTERVALS.

EXPANSION & CONSTRUCTION JOINT DETAIL

SIDEWALK DETAILS

NOT TO SCALE

* LOCATION OF SPOT ELEVATIONS AS SHOWN ON GRADING PLANS

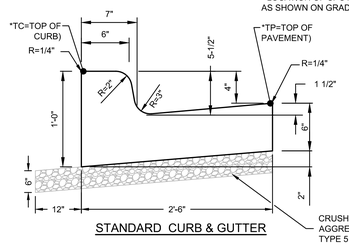

STANDARD CURB & GUTTER

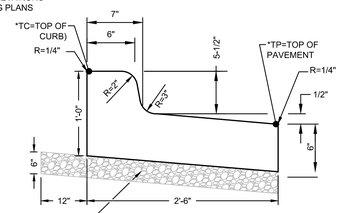

"DRY" CURB & GUTTER

TYPICAL CURB AND GUTTER - CONCRETE

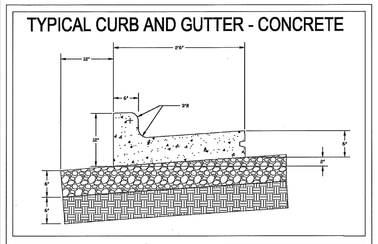

TYPICAL DRIVEWAY OPENING - CONCRETE

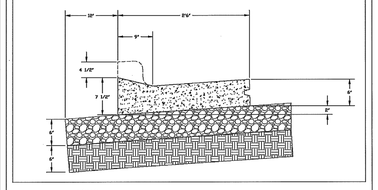

NOTES:
1. Keyway or #5 Dowel @ 2'0" to be used on all Concrete Pavement. Keyway and Dowel may be ommited where Asphalt Pavement is used.
2. 6" Type 1 compacted base rock shall be placed under curb and extended 1' behind curb.
3. Subgrade & Type I Base Rock must be compacted to 95% Standard Proctor.

NIXA	CONCRETE CURB and GUTTER - DETAIL	DATE: 02/14/05
		DWG D5

* SEE SHEETS C2.1-C2.2 FOR "LIFT VAN ACCESSIBLE ONLY" STALL LOCATION

** "LIFT VAN ACCESSIBLE ONLY" PARKING SIGN PLACED IN FRONT OF DESIGNATED STALL NOTED ON SPECIFIED SHEETS

**ACCESSIBLE PARKING SPACE SIGN (PER MUTCD) CENTERED ON EACH ACCESSIBLE SPACE- AS SHOWN. COORD. WITH PLAN & SEE SIGN DETAILS THIS SHEET

NOTE

ACCESSIBLE PARKING SYMBOL & SIGNAGE SHALL COMPLY WITH THE APPLICABLE RECOMMENDATIONS OF THE MANUAL OF UNIFORM TRAFFIC CONTROL DEVICES (MUTCD).

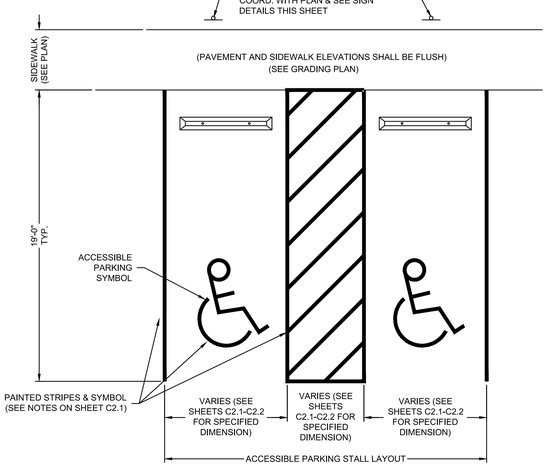

ACCESSIBLE PARKING SPACE LAYOUT DETAIL

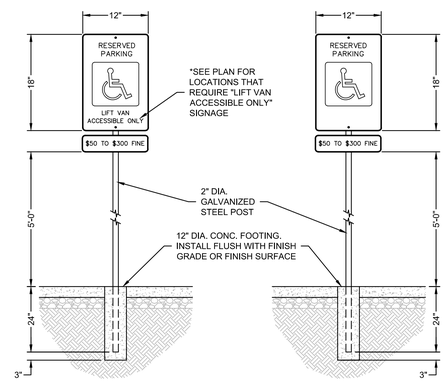

POLE MOUNTED LIFT VAN ACCESSIBLE SIGN

POLE MOUNTED ACCESSIBLE SIGN

ACCESSIBLE PARKING DETAILS

NOT TO SCALE

* NOTE: ASPHALT PAVEMENT SECTIONS ARE ESTIMATES UNTIL GEOTECH ENGINEER PROVIDES FINAL SECTION RECOMMENDATONS

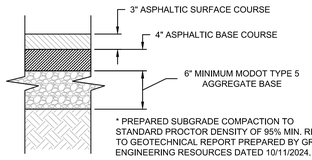

* PREPARED SUBGRADE COMPACTION TO STANDARD PROCTOR DENSITY OF 95% MIN. REFER TO GEOTECHNICAL REPORT PREPARED BY GREDELL ENGINEERING RESOURCES DATED 10/11/2024.

HEAVY DUTY ASPHALT PAVEMENT SECTION

NOT TO SCALE

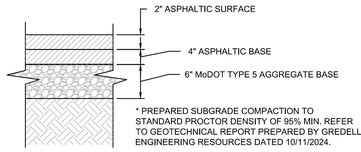

* PREPARED SUBGRADE COMPACTION TO STANDARD PROCTOR DENSITY OF 95% MIN. REFER TO GEOTECHNICAL REPORT PREPARED BY GREDELL ENGINEERING RESOURCES DATED 10/11/2024.

LIGHT DUTY ASPHALT PAVEMENT SECTION

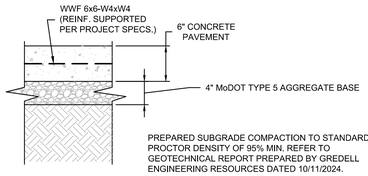

PREPARED SUBGRADE COMPACTION TO STANDARD PROCTOR DENSITY OF 95% MIN. REFER TO GEOTECHNICAL REPORT PREPARED BY GREDELL ENGINEERING RESOURCES DATED 10/11/2024.

HEAVY DUTY CONCRETE PAVEMENT SECTION

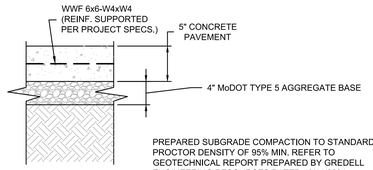

PREPARED SUBGRADE COMPACTION TO STANDARD PROCTOR DENSITY OF 95% MIN. REFER TO GEOTECHNICAL REPORT PREPARED BY GREDELL ENGINEERING RESOURCES DATED 10/11/2024.

STANDARD DUTY CONCRETE PAVEMENT SECTION

CONCRETE PAVEMENT NOTES:

1. CONTRACTOR SHALL SUBMIT A PAVEMENT JOINTING PLAN AND JOINT DETAILS OF ALL CONCRETE PAVEMENT AREAS FOR ENGINEER APPROVAL.

PAVEMENT SECTIONS

NOT TO SCALE

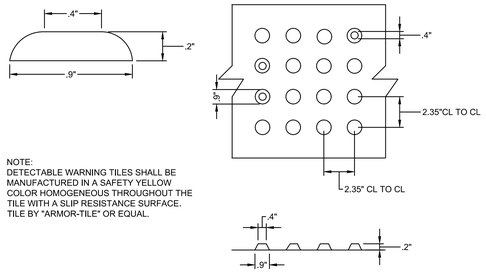

NOTE:
DETECTABLE WARNING TILES SHALL BE MANUFACTURED IN A SAFETY YELLOW COLOR HOMOGENEOUS THROUGHOUT THE TILE WITH A SLIP RESISTANCE SURFACE. TILE BY "ARMOR-TILE" OR EQUAL.

DETECTABLE WARNING TRUNCATED DOMES DETAIL

NOT TO SCALE

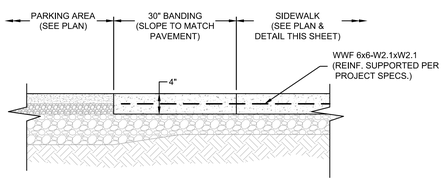

CONCRETE SIDEWALK AND BANDING FLUSH WITH PAVEMENT

NOT TO SCALE

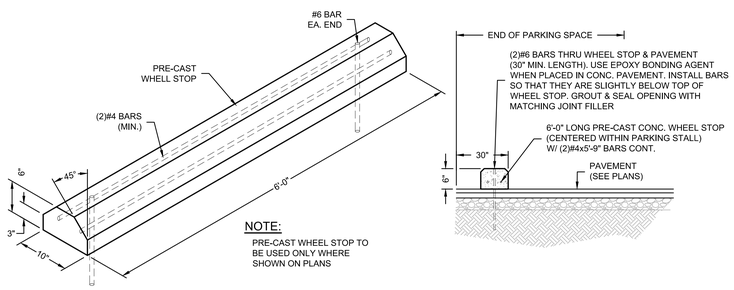

NOTE:
PRE-CAST WHEEL STOP TO BE USED ONLY WHERE SHOWN ON PLANS

PRE-CAST WHEEL STOP DETAILS

NOT TO SCALE

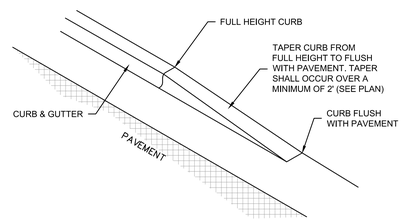

CURB TRANSITION DETAIL

NOT TO SCALE

NIXA POLICE DEPARTMENT
305 N. LEEANN DRIVE
NIXA, MO 65714

IDeA ARCHITECTS
112 S. Main St., Nixa, MO 65714 Ph: 417-724-8553

CJD Engineering | Energy | Innovation

olsson

METTEMEYER ENGINEERING

Chiodini ARCHITECTS
Architecture / Interior Design / Graphics
1401 S. Brentwood Blvd., Suite 210 | St. Louis, Missouri 63144
314-225-0888 | ari@chiodini.com

Reissue Date

Professional of Record

STATE OF MISSOURI
RICKY HANSEN
NUMBER PE-2010017828
06/11/2025
PROFESSIONAL ENGINEER

DATE 06/11/2025

Copyright 2024 ©
These prints are the property of the architect and shall be usedonly for the project referenced above

Drawn by BWS

Project # 024-00531

Date 2025.06.11

Drawing Title: DETAILS

Sheet: C8.0

MISSOURI 811

olsson
550 East St. Louis Street
Springfield, MO 65806
olsson.com
TEL 417.890.8802
FAX 417.890.8805
Olsson, Inc. Engineering MO State Cert. of Authority #001592
Olsson, Inc. Landscape Architecture MO State Cert. of Authority #2005000285

F:\2024\00531-01000\024-00531\40-Design\Autocad\Final Plans\Sheets\SDN\C_DTL01_02400531.dwg
DATE: Jun 10, 2025 11:12am USER: tjstringer

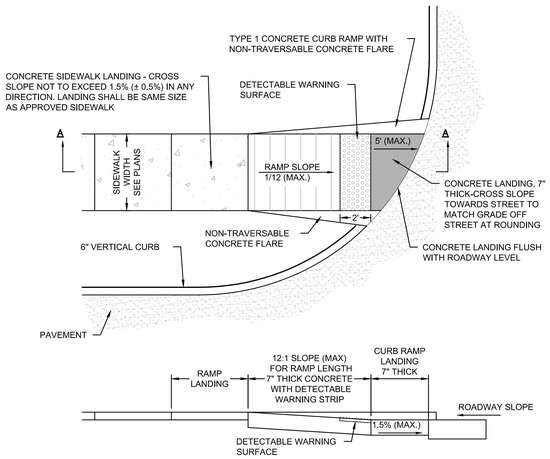

SECTION A-A

CURB RAMP DETAIL (TYPE 4)

NOT TO SCALE

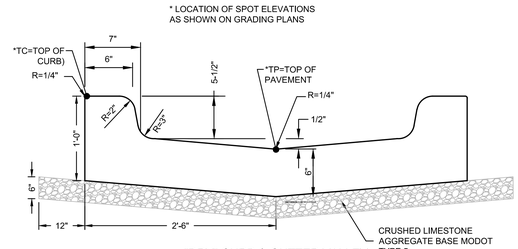

"DRY" CURB & GUTTER VALLEY

NOT TO SCALE

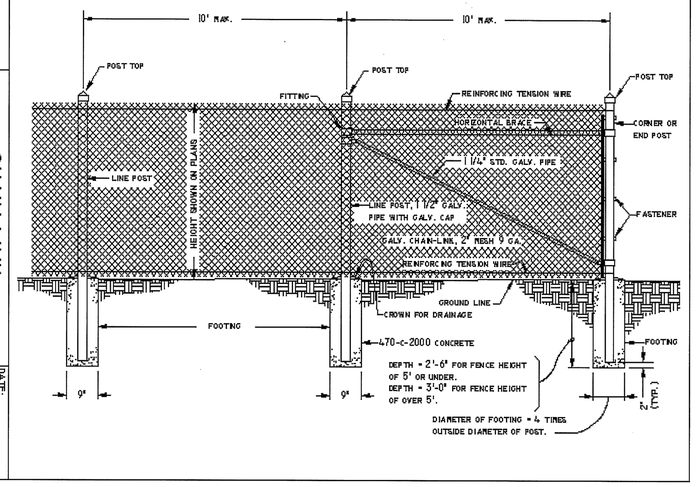

CHAIN LINK FENCE DETAIL

DATE: 01/31/99
DWG: E2

*NOTE:
NOT ALL SIDEWALK RAMPS WILL HAVE DETECTABLE WARNING AREAS. DETECTABLE WARNINGS SHALL ONLY BE INSTALLED WHERE SHOWN ON PLANS.

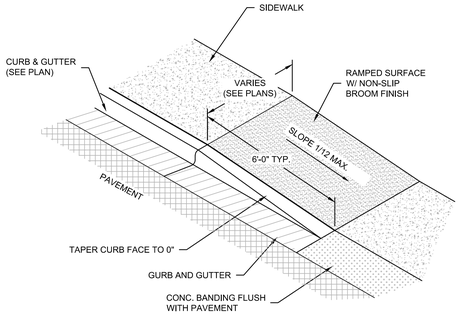

STANDARD CURB AND WALK TRANSITION TO PAVEMENT DETAIL

NOT TO SCALE

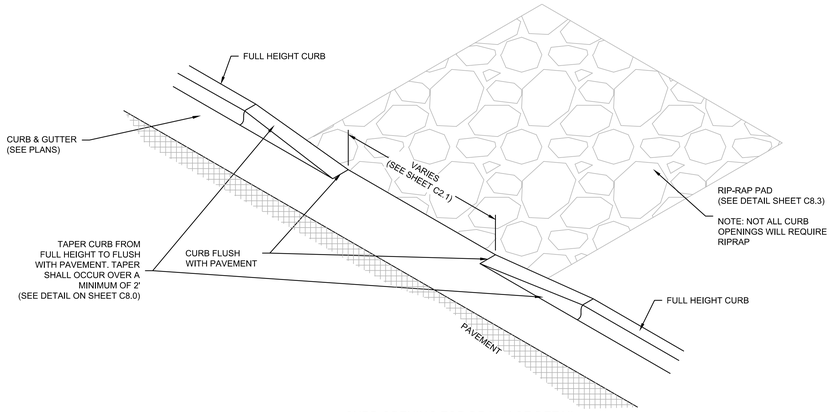

CURB OPENING FOR DRAINAGE DETAIL

NOT TO SCALE

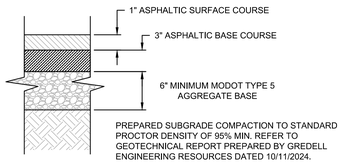

WALK-ABLE ASPHALT TRACK PAVEMENT SECTION

NOT TO SCALE

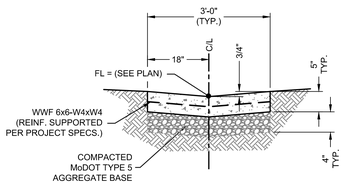

CONCRETE VALLEY GUTTER - TYPICAL SECTION

NOT TO SCALE

NIXA POLICE DEPARTMENT
305 N. LEEANN DRIVE
NIXA, MO 65714

INSIGHT DESIGN IDeA ARCHITECTS
112 S. Main St., Nixa, MO 65714 Ph: 417-724-8553

CJD Engineering | Energy | Innovation

olsson

METTEMEYER ENGINEERING

Chiodini ARCHITECTS
Architecture / Interior Design / Graphics
1401 S. Brentwood Blvd., Suite 215 | St. Louis, Missouri 63144
314-225-0888 | info@chiodini.com

Reissue Date

Professional of Record

STATE OF MISSOURI
RICKY HAMBY
NUMBER PE-2019017828
06/11/2025
PROFESSIONAL ENGINEER

DATE 06/11/2025

Copyright 2024 ©
These prints are the property of the architect and shall be usedonly for the project referenced above

Drawn by
BWS

Project #
024-00531

Date
2025.06.11

Drawing Title:
DETAILS

Sheet:
C8.1

550 East St. Louis Street
Springfield, MO 65806
olsson.com
TEL 417.890.8802
FAX 417.890.8805

Olsson, Inc. Engineering MO State Cert. of Authority #001592
Olsson, Inc. Landscape Architecture MO State Cert. of Authority #2005000285

F:\2024\00501-01000\024-00531\40-Design\Autoc\CAD\Final Plans\Sheets\SDN\C_DTL01_024-00531.dwg
DATE: Jun 10, 2025 11:13am USER: jsefinger

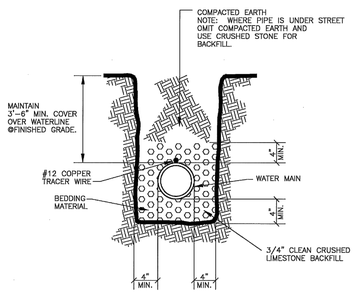

CITY OF NIXA — TYPICAL WATERLINE EMBEDMENT DETAIL — DATE: 01/31/99 — DWG: B1

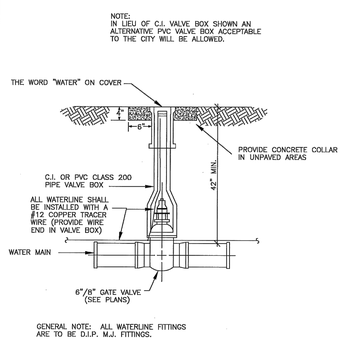

CITY OF NIXA — TYPICAL VALVE DETAIL — DATE: 10/26/06 — DWG: B2

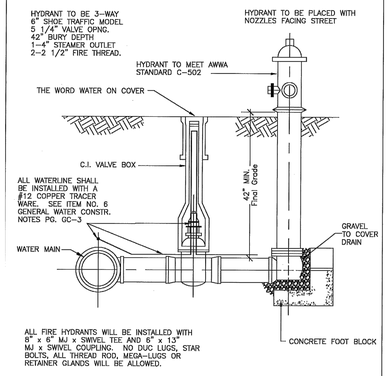

CITY OF NIXA — HYDRANT DETAIL — DATE: 10/31/06 — DWG: B3

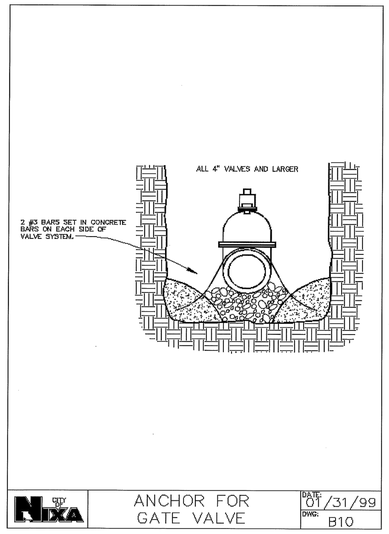

CITY OF NIXA — ANCHOR FOR GATE VALVE — DATE: 01/31/99 — DWG: B10

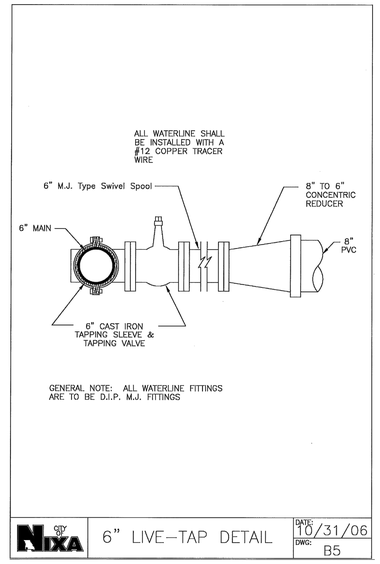

CITY OF NIXA — 6" LIVE-TAP DETAIL — DATE: 10/31/06 — DWG: B5

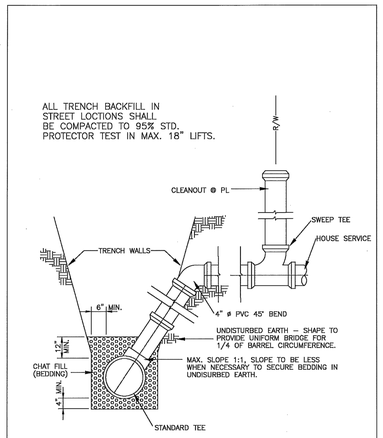

CITY OF NIXA — TYPICAL SEWER SERVICE DETAIL — DATE: 10/31/06 — DWG: C7

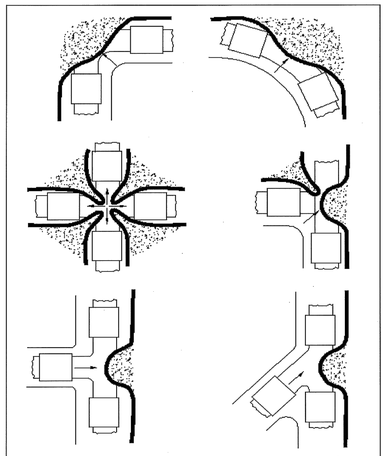

MIN. 2 CU. FT. CONCRETE EACH THRUST BLOCK CONTINUOUS FROM CENTERLINE PIPE TO UNDISTURBED TRENCH WALL.

CITY OF NIXA — TYPICAL THRUST BLOCK DETAIL — DATE: 01/31/99 — DWG: C13

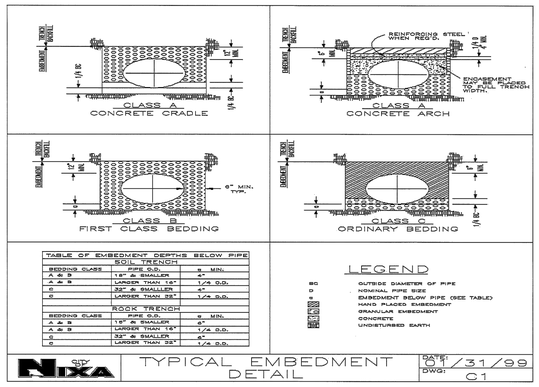

TABLE OF EMBEDMENT DEPTHS BELOW PIPE

SOIL TRENCH

BEDDING CLASS	PIPE O.D.	a MIN.
A & B	18" & SMALLER	4"
A & B	LARGER THAN 18"	1/4 O.D.
A & B	33" & SMALLER	4"
C	LARGER THAN 33"	1/4 O.D.

ROCK TRENCH

BEDDING CLASS	PIPE O.D.	a MIN.
A & B	18" & SMALLER	4"
A & B	LARGER THAN 18"	1/4 O.D.
A	33" & SMALLER	4"
C	LARGER THAN 33"	1/4 O.D.

CITY OF NIXA — TYPICAL EMBEDMENT DETAIL — DATE: 01/31/99 — DWG: C1

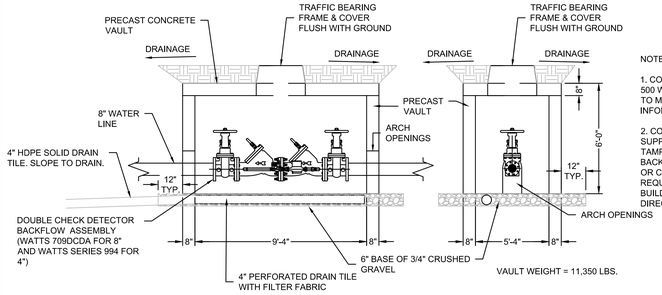

BACKFLOW PREVENTOR & VAULT

NOT TO SCALE

NOTES:

1. CONTRACTOR SHALL PROVIDE AND INSTALL BERKO WHT500 - 500 WATT WELL HOUSE HEATER, 208 VOLT SINGLE PHASE. REFER TO MEP PLANS AND SPECIFICATIONS FOR ADDITIONAL INFORMATION.

2. CONTRACTOR SHALL COORDINATE WITH THE BUILDING FIRE SUPPRESSION DESIGNER OR PROJECT MEP TO DETERMINE IF TAMPER SWITCHES ARE REQUIRED TO BE INSTALLED ON THE BACKFLOW PER AHJ'S CURRENT ACCEPTED VERSION OF THE IFC OR CURRENT NFPA STANDARDS. SHOULD TAMPER SWITCHES BE REQUIRED, CONTRACTOR SHALL COORDINATE WITH THE BUILDING FIRE SUPPRESSION DESIGNER OR PROJECT MEP FOR DIRECTION.

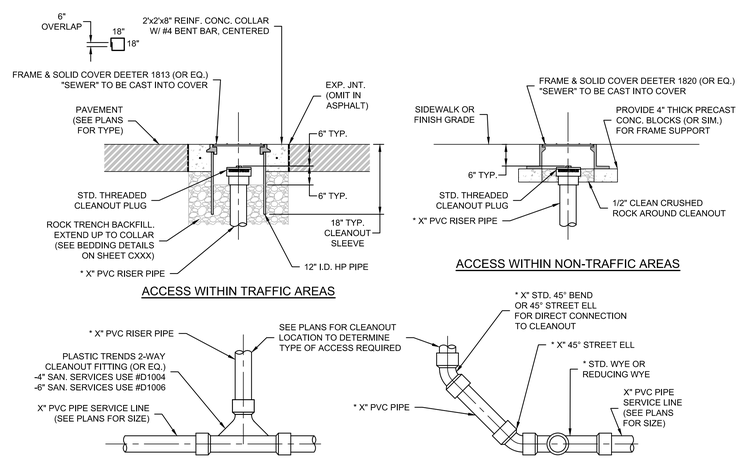

SANITARY SEWER CLEANOUT DETAILS

NOT TO SCALE

NIXA POLICE DEPARTMENT

305 N. LEEANN DRIVE
NIXA, MO 65714

INSIGHT DESIGN IDeA ARCHITECTS
112 S. Main St., Nixa, MO 65714 Ph: 417-724-8553

CJD Engineering | Energy | Innovation

olsson

METTEMEYER ENGINEERING

Chiodini ARCHITECTS
Architecture / Interior Design / Graphics
1401 S. Brentwood Blvd. | Suite 375 St. Louis, Missouri 63144
314-725-0888 | ann@gchiodini.com

Reissue Date

Professional of Record

STATE OF MISSOURI — RICKY HAAS — PE-2019017828 — 06/11/2025 — PROFESSIONAL ENGINEER

DATE 06/11/2025

Copyright 2024 ©

These prints are the property of the architect and shall be usedonly for the project referenced above

Drawn by: BWS

Project #: 024-00531

Date: 2025.06.11

Drawing Title: DETAILS

Sheet: C8.2

MISSOURI 811

olsson

550 East St. Louis Street
Springfield, MO 65806

olsson.com
TEL 417.890.8802
FAX 417.890.8805

Olsson, Inc. Engineering MO State Cert. of Authority #001592
Olsson, Inc. Landscape Architecture MO State Cert. of Authority #2005000285

F:\2024\00531-01\000\024-00531\10-Design\AutoCAD\Final Plans\Sheets\SDWG_UTL01_024\00531.dwg
DATE: Jun 10, 2025 11:15am USER: bstringer

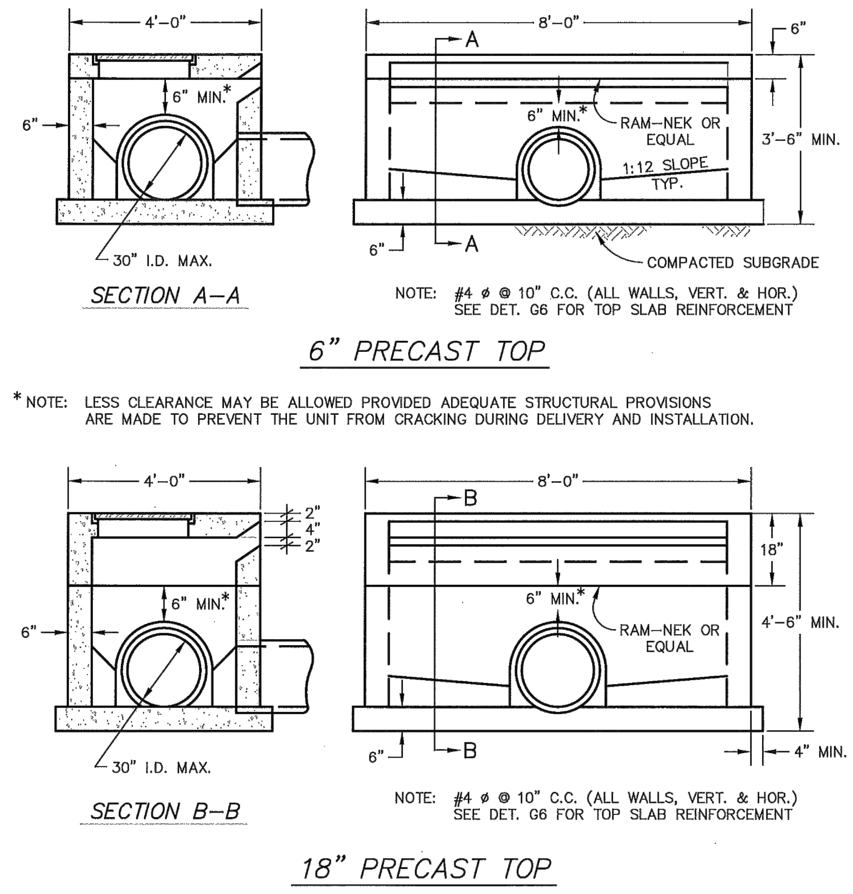

SECTION A-A

NOTE: #4 ø @ 10" C.C. (ALL WALLS, VERT. & HOR.) SEE DET. G6 FOR TOP SLAB REINFORCEMENT

6" PRECAST TOP

* NOTE: LESS CLEARANCE MAY BE ALLOWED PROVIDED ADEQUATE STRUCTURAL PROVISIONS ARE MADE TO PREVENT THE UNIT FROM CRACKING DURING DELIVERY AND INSTALLATION.

SECTION B-B

NOTE: #4 ø @ 10" C.C. (ALL WALLS, VERT. & HOR.) SEE DET. G6 FOR TOP SLAB REINFORCEMENT

18" PRECAST TOP

NOTES:
1. BOTTOM TO BE CAST IN PLACE.
2. PIPE TO BE ON GRADE BEFORE BOTTOM IS CONSTRUCTED.
3. TOP SHALL RECEIVE 4 – #4 ø DOWELS; ONE IN EACH CORNER W/ RAM-NEK OR EQUAL.
4. RAM-NEK ALL JOINTS (OR EQUAL).
5. 6" INVERT REQUIRED TO PREVENT SEDIMENTATION.
6. STANDARD CURB AND GUTTER SHALL BE TRANSITIONED TO INLET OPENING AT LEAST 4 FEET ON EACH SIDE OF CURB INLET.

CITY OF NIXA MISSOURI | CURB INLET | DATE: 7 / 8 / 15 | DWG: G5

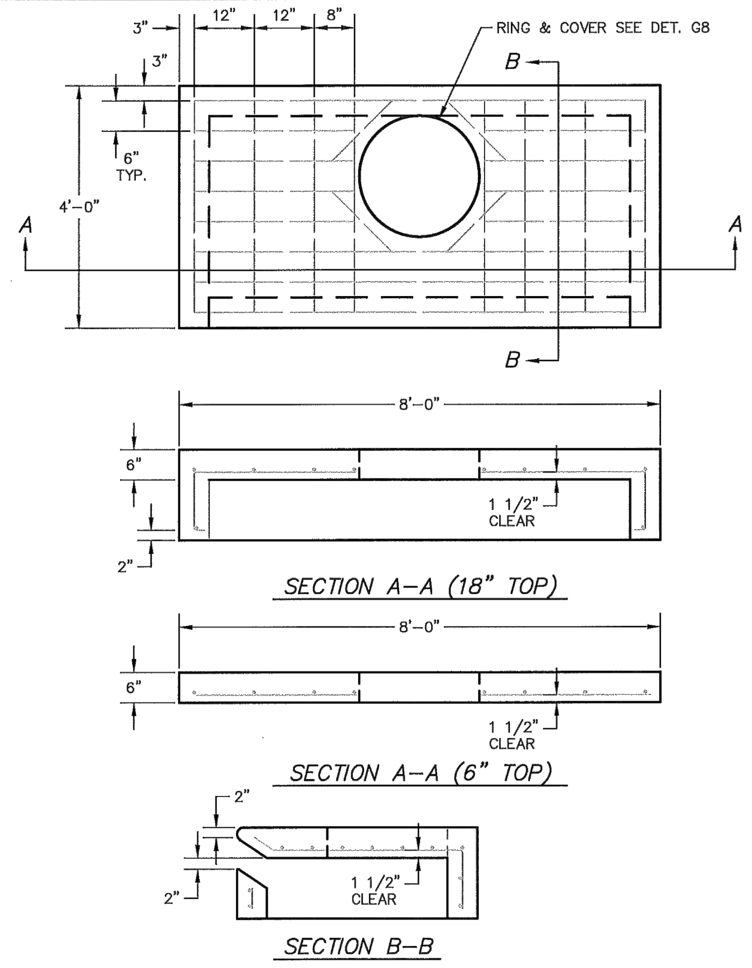

SECTION A-A (18" TOP)

SECTION A-A (6" TOP)

SECTION B-B

NOTES:
1. REINFORCEMENT IS THE SAME IN THE TOP SLAB OF THE 6" AND 18" TOPS.
2. USE NO. 4 REBAR THROUGHOUT.
3. FOR 6" TOP USE 4 – #4 ø DOWELS; ONE IN EACH CORNER W/ RAM-NEK OR EQUAL.
4. RAM-NEK ALL JOINTS (OR EQUAL).

CITY OF NIXA MISSOURI | PRECAST INLET TOPS | DATE: 7 / 8 / 15 | DWG: G6

NOTES:
1. FURNISHED WITH MACHINED HORIZONTAL BEARING SURFACE.
2. RING IS REVERSIBLE AND CAN BE INSTALLED WITH FLANGE UP OR DOWN.
3. FOR TYPE C RING AND COVER, USE DEETER #1157 RING W/ #2018-A COVER, OR EAST JORDAN IRON WORKS #2425Z RING W/ 2408A COVER OR APPROVED EQUAL.

CITY OF NIXA MISSOURI | STORMWATER MANHOLE RIM AND COVER | DATE: 7 / 8 / 15 | DWG: G8

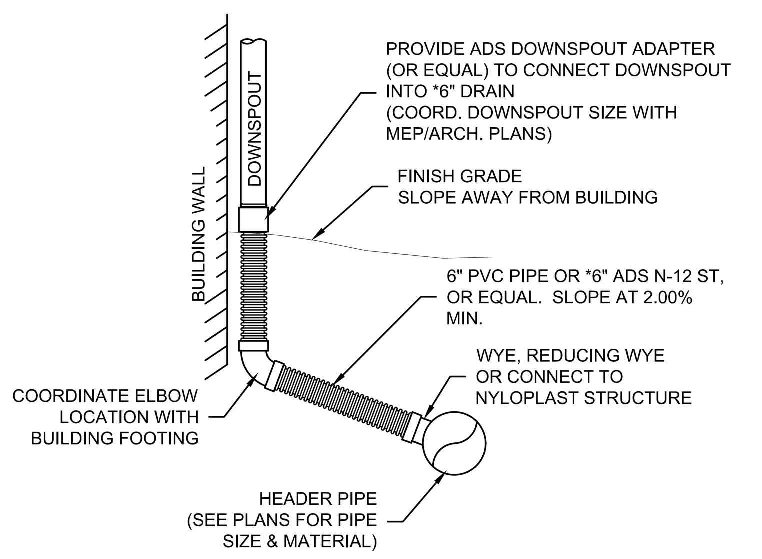

DOWNSPOUT CONNECTION DETAIL

NOT TO SCALE

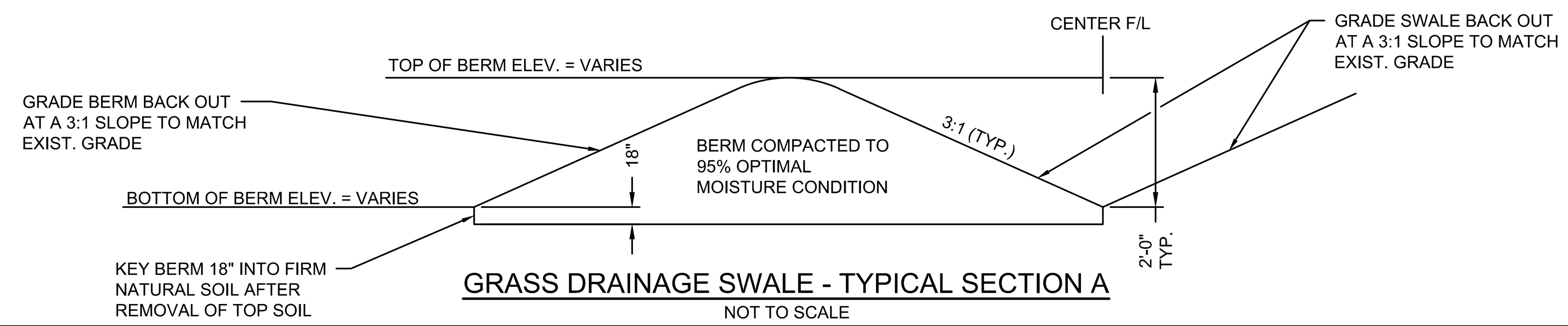

GRASS DRAINAGE SWALE - TYPICAL SECTION A

NOT TO SCALE

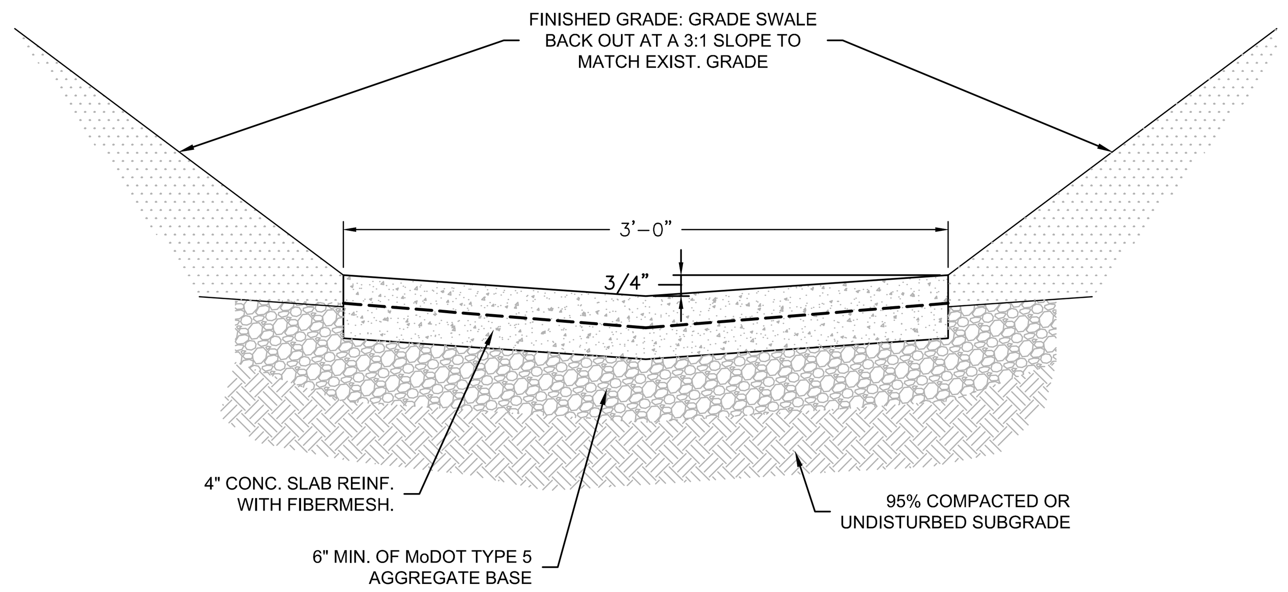

CONCRETE DRAINAGE SWALE - TYPICAL SECTION B

NOT TO SCALE

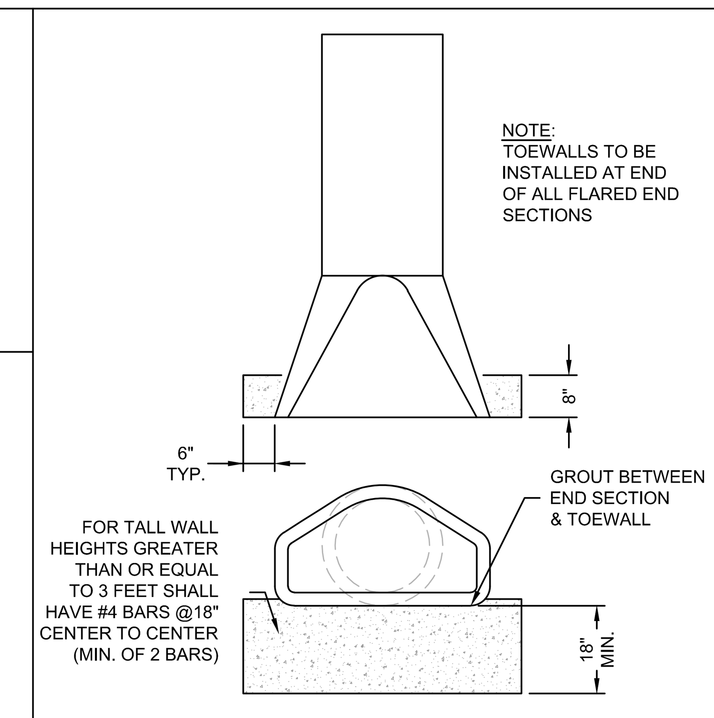

CONC. TOEWALL DETAIL

N.T.S.

TRENCH BACKFILL REQUIREMENTS	
PERCENT PASSING	SIEVE SIZE
100	3/4-INCH
60-100	1/2-INCH
0-5	NO. 4

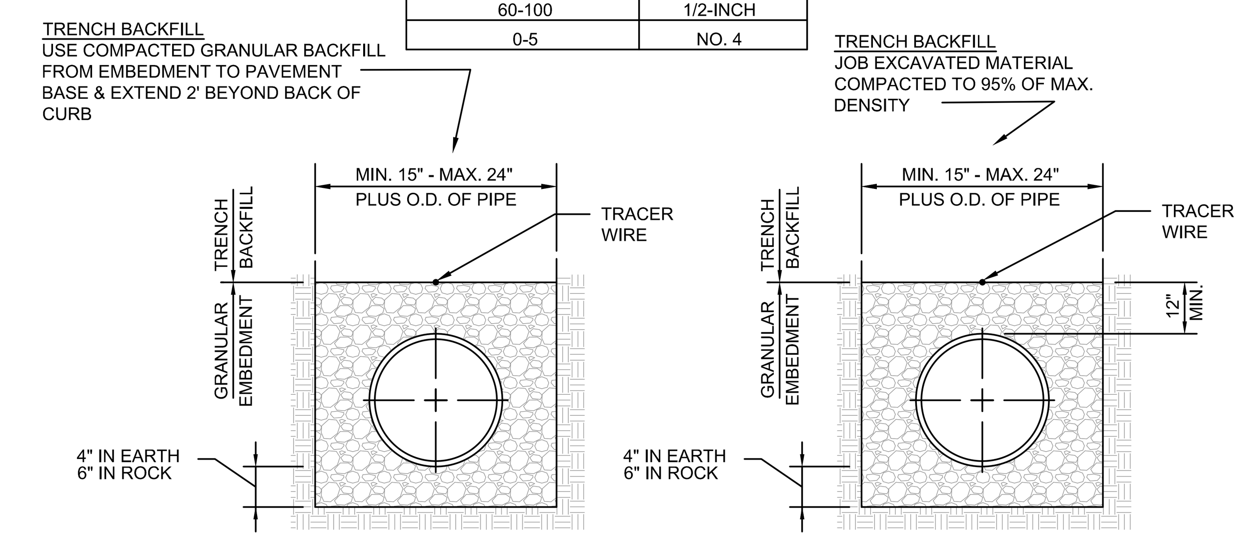

UNDER PAVEMENT

OUTSIDE PAVEMENT

STORM SEWER BEDDING DETAILS

NOT TO SCALE

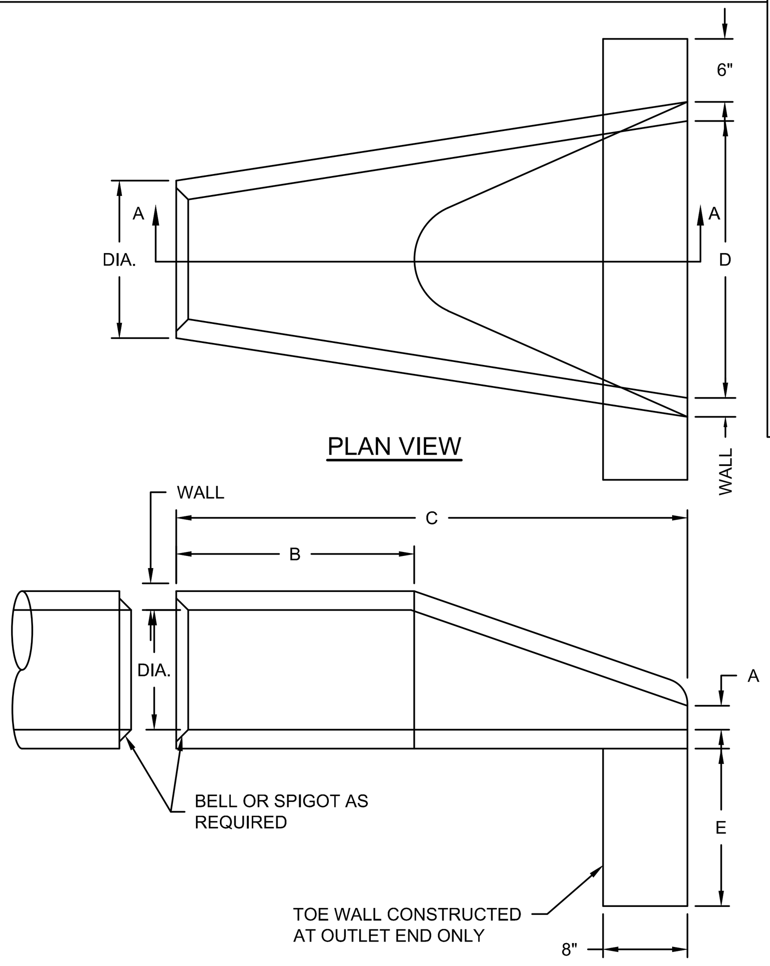

PLAN VIEW

SECTION A-A

REINFORCEMENT					
ADJOINING PIPE DIA.	BARREL SECTION REINFORCEMENT			FLARE SECTION REINFORCEMENT (ONE LAYER ONLY IN CENTER OF WALL)	
	CIRCULAR		ELLIPTICAL		
	INNER CAGE SQ. IN./ LIN. FT.	OUTER CAGE SQ. IN./ LIN. FT.	SQ. IN./ LIN. FT.	AREA OF LONGITUDINAL SQ. IN./ LIN. FT.	AREA OF TRANSVERSE SQ. IN./ LIN. FT.
12"	0.07			0.048	0.048
15"	0.07			0.054	0.054
18"	0.07		0.07	0.060	0.060
21"	0.07		0.07	0.066	0.066
24"	0.07		0.07	0.072	0.072
30"	0.14		0.12	0.084	0.084
36"	0.12	0.09	0.13	0.096	0.096
42"	0.15	0.12	0.17	0.108	0.108
48"	0.18	0.14	0.20	0.120	0.120
54"	0.22	0.16	0.24	0.132	0.132

DIMENSIONS						
DIA.	WALL	A	B MIN.	C MIN.	D	E
12"	2"	4"	4'-0"	6'	2'-0"	18"
15"	2 1/4"	6"	3'-10"	6'	2'-6"	18"
18"	2 1/2"	9"	3'-10"	6'	3'-0"	18"
21"	2 3/4"	9"	3'-2"	6'	3'-6"	18"
24"	3"	9 1/2"	2'-6"	6'	4'-0"	24"
30"	3 1/2"	1-0"	1'-7"	6'	5'-0"	24"
36"	4"	1'-3"	2'-10"	8'	6'-0"	24"
42"	4 1/2"	1'-9"	2'-11"	8'	6'-6"	24"
48"	5"	2'-0"	2'-2"	8'	7'-0"	24"
54"	5 1/2"	2'-3"	2'-11"	8'	7'-6"	36"

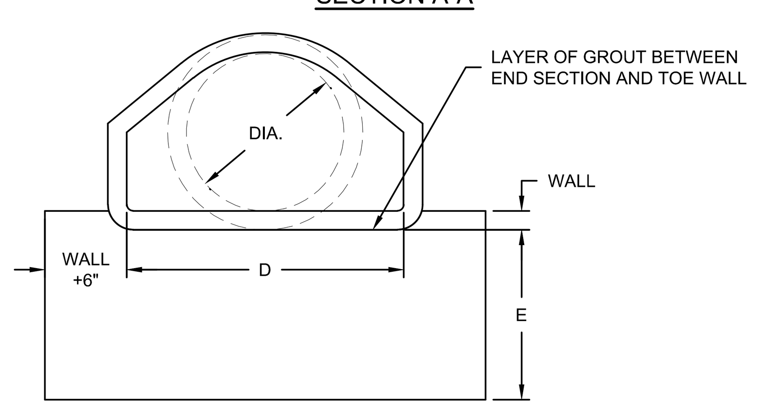

END VIEW

CONCRETE FLARED END SECTION (F.E.S.) DETAILS

NOT TO SCALE

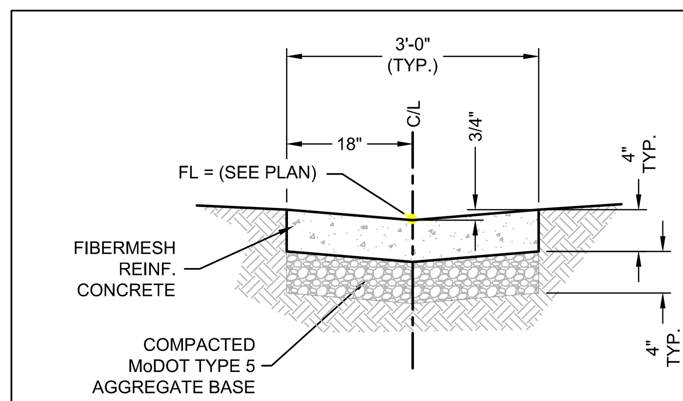

CONCRETE LOW-FLOW CHANNEL - TYPICAL SECTION

NOT TO SCALE

NOTES:
1. RIPRAP SHALL BE PLACED IN SUCH A MANNER AS TO AVOID SEGREGATION OF VARIOUS SIZES OF ROCK, AND DISTRIBUTED SO THAT THERE WILL BE NO LARGE ACCUMULATION OF EITHER THE LARGER OR SMALLER SIZES OF STONE.
2. INDIVIDUAL ROCKS SHALL BE PLACED IN TIGHT CONTACT WITH ONE ANOTHER IN SUCH A WAY TO PRODUCE THE LEAST AMOUNT OF VOID SPACES.
3. RIPRAP SHALL BE SOLID, UNFRACTURED ROCK OR CONCRETE, BULKY IN SHAPE WITH SHARP, ANGULAR EDGES.
4. GRANULAR BEDDING SHALL CONSIST OF 1" CLEAN, FRACTURED LIMESTONE.
5. INSTALL FILTER FABRIC ACCORDING TO MANUFACTURER'S RECOMMENDATIONS.

CLASSIFICATION & GRADATION OF RIPRAP & RIVER GRAVEL			
RIP-RAP DESIGNATION	PERCENT (%) SMALLER THAN GIVEN BY WEIGHT	INTERMEDIATE ROCK DIMENSION (INCHES)	* D_{50} (INCHES)
TYPE L	70-100	21	12
	50-70	18	
	35-50	12	
	2-10	4	

*D_{50}= MEAN PARTICLE SIZE (INTERMEDIATE DIMENSION).

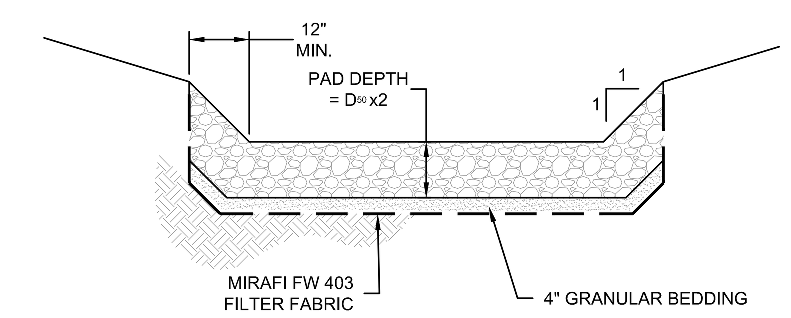

SECTION B-B

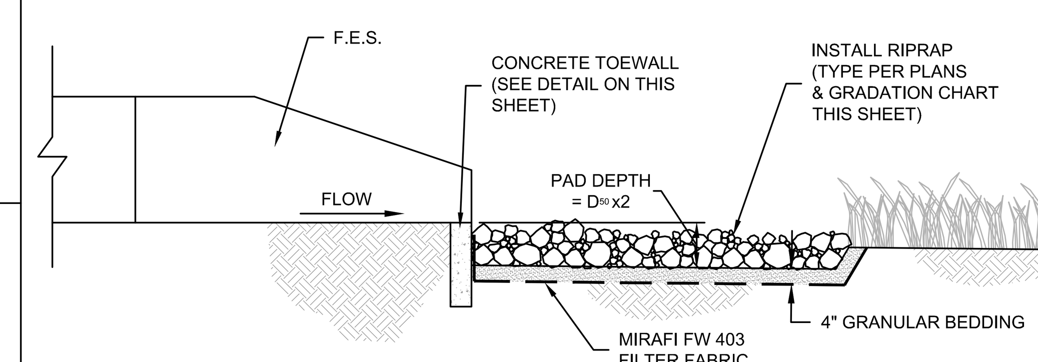

SECTION A - A

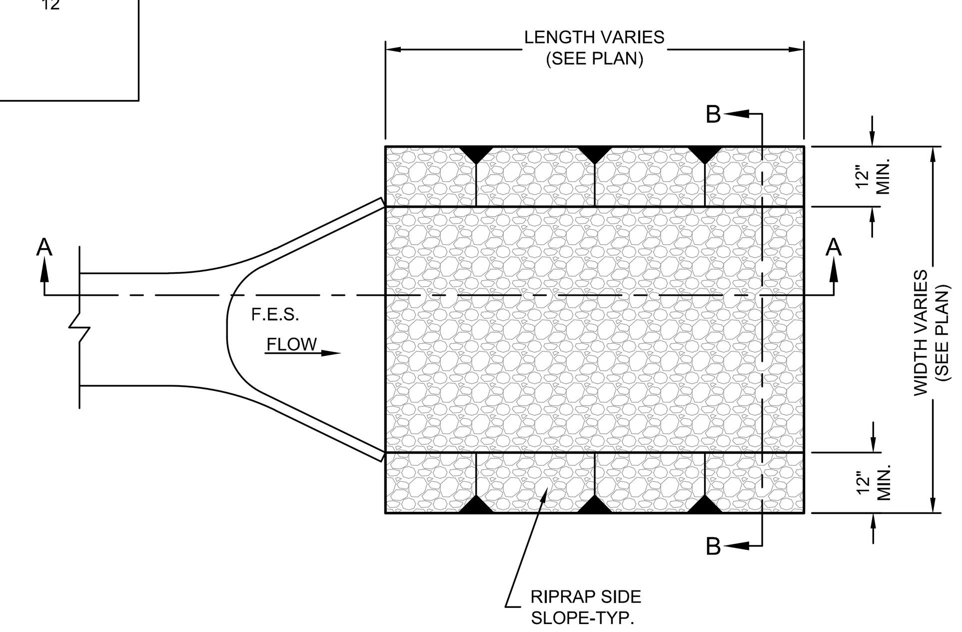

PLAN VIEW

RIPRAP APRON DETAILS

NOT TO SCALE

MISSOURI 811

olsson

550 East St. Louis Street
Springfield, MO 65806

olsson.com
TEL 417.890.8802
FAX 417.890.8805

Olsson, Inc. Engineering MO State Cert. of Authority #001592
Olsson, Inc. Landscape Architecture MO State Cert. of Authority #2005000285

NIXA POLICE DEPARTMENT

305 N. LEEANN DRIVE
NIXA, MO 65714

INSIGHT DESIGN IDeA ARCHITECTS
112 S. Main St., Nixa, MO 65714 Ph: 417-724-8553

CJD Engineering | Energy | Innovation

olsson

METTEMEYER ENGINEERING LLC

Chiodini ARCHITECTS
Architecture / Interior Design / Graphics
1401 S. Brentwood Blvd. / Suite 575 / St. Louis, Missouri 63144
314-725-5588 / arch@chiodini.com

Reissue Date

Professional of Record

STATE OF MISSOURI
RICKY HAASE
NUMBER PE-2019017828
06/11/2025
PROFESSIONAL ENGINEER

DATE 06/11/2025

Copyright 2024 ©
These prints are the property of the architect and shall be usedonly for the project referenced above

Drawn by: BWS

Project #: 024-00531

Date: 2025.06.11

Drawing Title: DETAILS

Sheet: C8.3

F:\2024\00501-01000\024-00531\40-Design\AutoCAD\Final Plans\Sheets\SDN\C_STM01_02400531.dwg
DATE: Jun 10, 2025 11:18am USER: bstringer

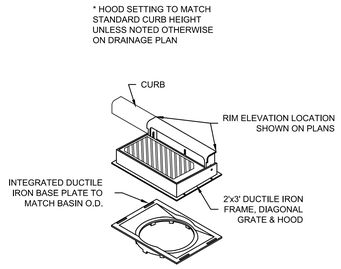

CURB INLET CASTINGS

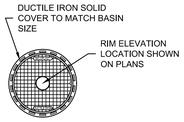

SOLID COVER

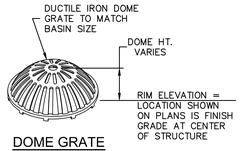

DOME GRATE

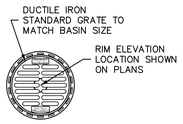

STANDARD GRATE

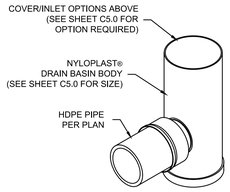

DRAIN BASIN DETAILS

NOT TO SCALE

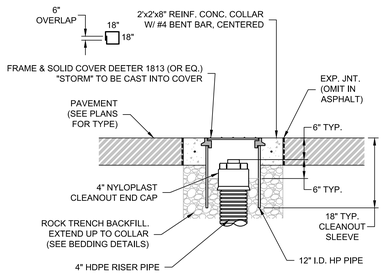

ACCESS WITHIN TRAFFIC AREAS

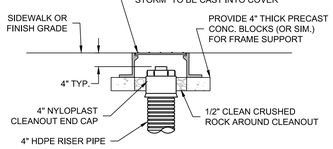

ACCESS WITHIN NON-TRAFFIC AREAS

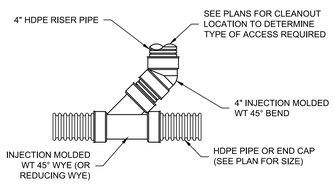

STORM SEWER CLEANOUT DETAILS

NOT TO SCALE

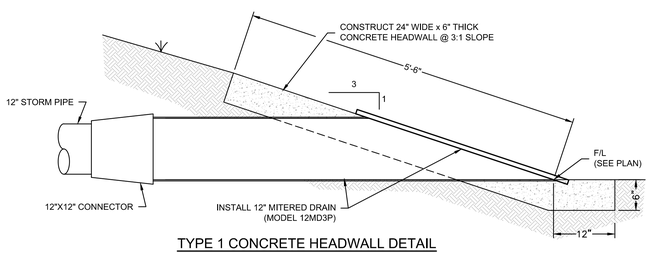

TYPE 1 CONCRETE HEADWALL DETAIL

NOT TO SCALE

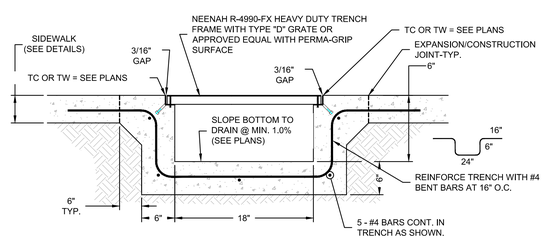

COVERED CONCRETE FLUME DETAIL

NOT TO SCALE

NIXA POLICE DEPARTMENT

305 N. LEEANN DRIVE
NIXA, MO 65714

INSIGHT DESIGN IDeA ARCHITECTS
112 S. Main St., Nixa, MO 65714 Ph: 417-724-8553

CJD Engineering | Energy | Innovation

olsson

METTEMEYER ENGINEERING

Chiodini ARCHITECTS
Architecture / Interior Design / Graphics
14015 S. Brentwood Blvd. | Suite 253 St. Louis, Missouri 63144
314-535-5585 | info@chiodini.com

Reissue Date

Professional of Record

STATE OF MISSOURI
RICKY HAASE
NUMBER
PE-2010017828
06/11/2025
PROFESSIONAL ENGINEER

DATE 06/11/2025

Copyright 2024 ©
These prints are the property of the architect and shall be usedonly for the project referenced above

Drawn by
BWS

Project #
024-00531

Date
2025.06.11

Drawing Title:
DETAILS

Sheet:
C8.4

MISSOURI 811

olsson
550 East St. Louis Street
Springfield, MO 65806
olsson.com
TEL 417.890.8802
FAX 417.890.8805
Olsson, Inc. Engineering MO State Cert. of Authority #001592
Olsson, Inc. Landscape Architecture MO State Cert. of Authority #2005000285

F:\2024\00531-01\000\024-00531\140-Design\AutoCAD\Final Plans\Sheets\SD\NC_STM01_024-00531.dwg
DATE: Jun 10, 2025 11:18am USER: bettinger

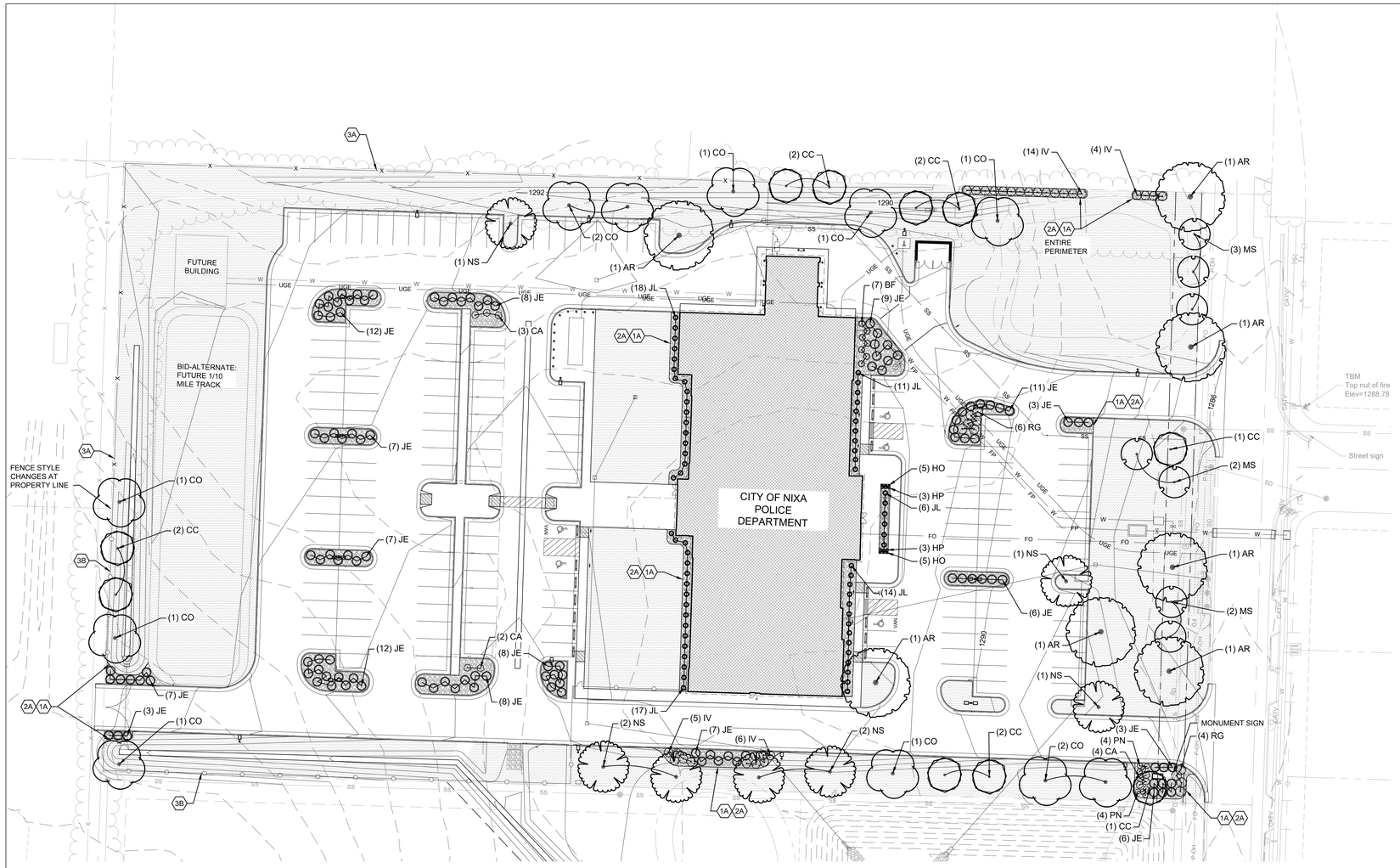

KEYNOTES:

- 1A — METAL EDGING (SEE DETAIL, SHEET L3.0)
- 2A — RIVER GRAVEL MULCH (SEE DETAIL, SHEET L3.0)
- 3A — CHAIN LINK FENCE WITH SLATS PER CIVIL PLANS (REFER TO SHEETS C2.1 AND C8.1)
- 3B — DECORATIVE FENCE PER ARCHITECTURAL PLANS (REFER TO SHEET C2.1)

LANDSCAPE LEGEND

- GRASS - SOD - TURF TYPE TALL FESCUE, OR APPROVED EQUAL
- RIVER GRAVEL MULCH (REFER TO SPECIFICATIONS)

NOTE:
CONTRACTOR SHALL PROVIDE, INSTALL AND UTILIZE WATERING BAGS FOR ALL NEW TREES. EACH TREE SHALL INCLUDE ONE TREEGATOR WATERING BAG, OR APPROVED EQUIVALENT. BAGS SHALL REMAIN IN PLACE FOLLOWING FINAL COMPLETION FOR USE BY OWNER.

LANDSCAPE FIRE PROTECTION NOTES:

1. COMBUSTIBLE LANDSCAPE MATERIALS SHALL NOT BE WITHIN 18 INCHES OF EXTERIOR FACE OF THE PROPOSED BUILDING.
2. COMBUSTIBLE LANDSCAPE MATERIALS SHALL NOT BE WITHIN AN 18 INCH RADIUS OF THE PROPOSED GAS METER.
3. RECEPTACLES FOR DISCARDED SMOKING MATERIALS SHALL BE NO CLOSER THAN 18 INCHES TO COMBUSTIBLE LANDSCAPE MATERIALS, AND SHALL BE EMPTIED REGULARLY.

PLANT SCHEDULE

SYMBOL	CODE	QTY	BOTANICAL / COMMON NAME	SIZE	CONTAINER TYPE	M. HT.	M. WDTH.	SUN/SHADE	WATER	REMARKS
TREES										
	AR	7	ACER RUBRUM RED MAPLE	2" CAL. 8' HT.	B&B	40'–70'	30'–50'	FULL SUN / PART SHADE	MEDIUM TO WET	MO NATIVE
	CC	10	CERCIS CANADENSIS EASTERN REDBUD	2" CAL. 8' HT.	B&B	20'–30'	25'–35'	FULL SUN / PART SHADE	MEDIUM	MO NATIVE
	CO	11	COTINUS OBOVATUS AMERICAN SMOKE TREE	2" CAL. 8' HT.	B&B	20'–30'	20'–30'	FULL SUN	MEDIUM	MO NATIVE
	MS	7	MALUS X 'SPRING SNOW' SPRING SNOW CRABAPPLE	2" CAL. 8' HT.	B&B	20'–25'	15'–20'	FULL SUN	MEDIUM	
	NS	7	NYSSA SYLVATICA BLACKGUM	2" CAL. 8' HT.	B&B	30'–50'	20'–30'	FULL SUN / PART SHADE	MEDIUM TO WET	MO NATIVE
DECIDUOUS SHRUBS										
	CA	9	CEANOTHUS AMERICANUS NEW JERSEY TEA	3 GAL.	CONTAINER	3'–4'	3'–5'	FULL SUN/PART SHADE	DRY TO MEDIUM	MO NATIVE
	IV	29	ITEA VIRGINICA 'HENRY'S GARNET' HENRY'S GARNET SWEETSPIRE	3 GAL.	CONTAINER	3'–4'	4'–6'	FULL SUN/PART SHADE	MEDIUM TO WET	
	PN	8	PHYSOCARPUS OPULIFOLIUS 'NANUS' DWARF NINEBARK	3 GAL.	CONTAINER	1'–2'	2'–3'	FULL SUN/PART SHADE	DRY TO MEDIUM	
	RG	10	RHUS AROMATICA 'GRO–LOW' GRO–LOW FRAGRANT SUMAC	3 GAL.	CONTAINER	1.5'–2'	6'–8'	FULL SUN/PART SHADE	DRY TO MEDIUM	
EVERGREEN SHRUBS										
	BF	7	BUXUS SEMPERVIRENS 'FASTIGIATA' FASTIGIATA BOXWOOD	3 GAL.	CONTAINER	10'–12'	4'–5'	FULL SUN/PART SHADE	MEDIUM	
	JE	117	JUNIPERUS HORIZONTALIS 'EMERALD SPREADER' EMERALD SPREADER JUNIPER	3 GAL.	CONTAINER	0.5'–0.75'	5'–6'	FULL SUN	MEDIUM	
	JL	66	JUNIPERUS HORIZONTALIS 'LIMEGLOW' LIMEGLOW CREEPING JUNIPER	3 GAL.	CONTAINER	0.5'–1'	1'–3'	FULL SUN	MEDIUM	
PERENNIALS										
	HP	6	HEMEROCALLIS X 'PURPLE DE ORO' PURPLE DE ORO DAYLILY	1 GAL.	CONTAINER	1.5'–2'	1.5'–2'	FULL SUN/PART SHADE	MEDIUM	
	HO	10	HEMEROCALLIS X 'STELLA DE ORO' STELLA DE ORO DAYLILY	1 GAL.	CONTAINER	0.75'–1'	0.75'–1'	FULL SUN/PART SHADE	MEDIUM	

0' 15' 30' 60'
SCALE IN FEET

MISSOURI 811
olsson
Olsson, Inc. Engineering MO State Cert. of Authority #001592
Olsson, Inc. Landscape Architecture MO State Cert. of Authority #2005000285
550 East St. Louis Street
Springfield, MO 65806
olsson.com
TEL 417.890.8802
FAX 417.890.8805

NIXA POLICE DEPARTMENT

305 N. LEEANN DRIVE
NIXA, MO 65714

INSIGHT DESIGN IDeA ARCHITECTS
112 S. Main St., Nixa, MO 65714 Ph: 417-724-8553
CJD Engineering | Energy | Innovation
olsson
METTEMEYER ENGINEERING
Chiodini ARCHITECTS
Architecture / Interior Design / Graphics
1401 S. Brentwood Blvd., Suite 215 | St. Louis, Missouri 63144
314-225-0888 | ian@chiodini.com

Reissue Date

Professional of Record

STATE OF MISSOURI
JANE K. BONEY
EARNHART
NUMBER
LA-00013
06-11-25
LANDSCAPE ARCHITECT

DATE 06/11/2025

Copyright 2024 ©
These prints are the property of the architect and shall be usedonly for the project referenced above

Drawn by
RAR

Project #
024-00531

Date
2025.06.11

Drawing Title:
LANDSCAPE PLAN

Sheet:
L1.0

F:\2024\00531-01\000\024-00531\40-Design\Autoc\CAD\Final Plans\Sheets\SDN\L_LSC01_02400531.dwg
DATE: Jun 10, 2025 11:21am USER: jbstringer

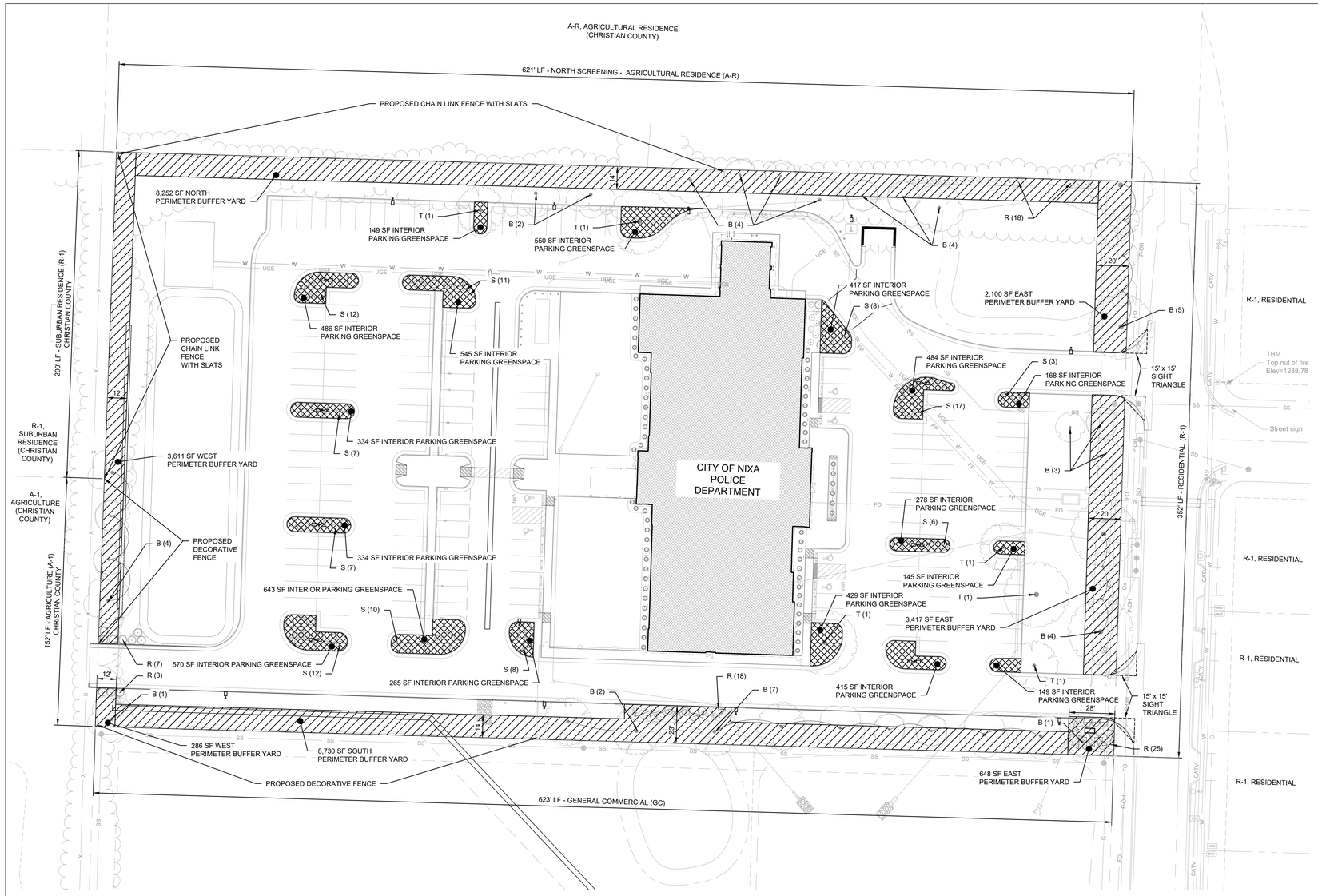

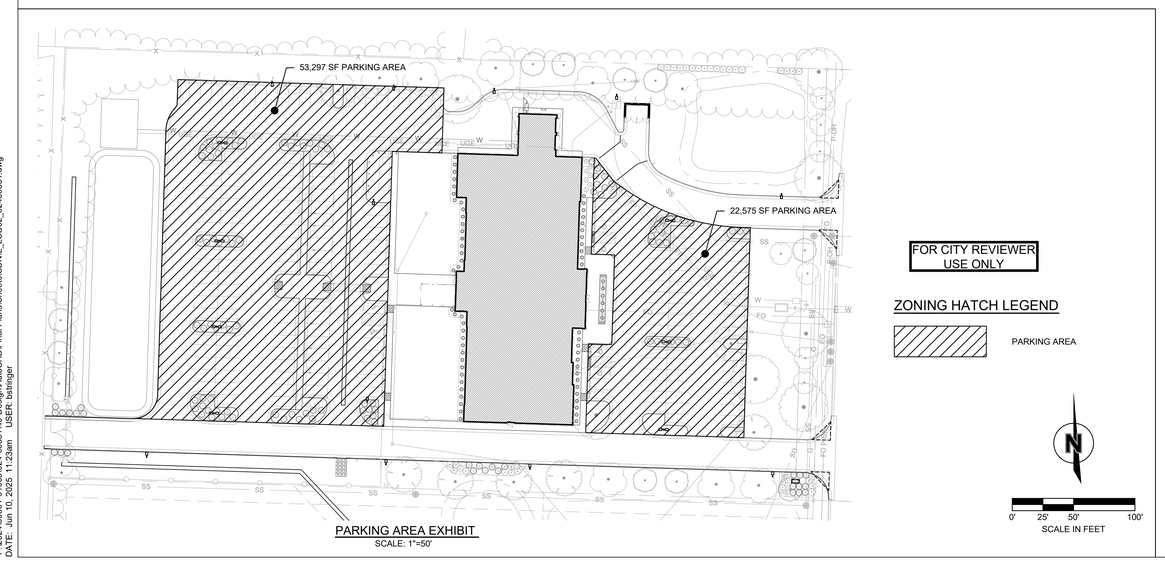

PARKING AREA EXHIBIT
SCALE: 1"=50'

FOR CITY REVIEWER USE ONLY

ZONING HATCH LEGEND

PARKING AREA

LANDSCAPE CALCULATIONS:

Zoning
Current Property:

GC, General Commercial

Adjacent Property:
North - Christian County, AR Agricultural - Residence
East - R-1, Residential
South - GC, General Commercial
West - Christian County, R-1 Suburban Residence, and A-1 Agriculture

Screening
North - Christian County, AR Agricultural - Residence
Required: Opaque Screening along residential
Provided: Chain Link Fence With Slats

East - R-1, Residential
Required: None due to street r/w between properties
Provided: n/a

South - GC, General Commercial
Required: None
Provided: n/a

West - Christian County, R-1 Suburban Residence
Required: Opaque Screening along residential
Provided: Chain Link Fence With Slats

West - Christian County, A-1 Agriculture
Required: None
Provided: n/a

Buffer Yard Widths & Plantings
Buffer plantings for GC are 3 shade trees and 6 shrubs per 1,000 SF of buffer

East - Street Buffer Yard
Required: 12' along Leeann Drive, 4,224 SF (12 * 352) requires 13 shade trees and 25 shrubs
Provided: 6,165 SF (2100 + 3417 + 648), 13 shade trees and 25 shrubs

North - Perimeter Buffer Yard
Required: 5', 3,105 SF (5 * 621) requires 9 shade trees and 18 shrubs
Provided: 8,252 SF, 9 shade trees* and 18 shrubs
*4 shade trees are planted south of the perimeter buffer yard to avoid utility and swale conflicts.

West - Perimeter Buffer Yard
Required: 5', 1,760 SF (5 *352) requires 5 shade trees and 10 shrubs
Provided: 3,909 (3,611 + 298) SF, 5 shade trees and 10** shrubs
**5 shrubs are planted east of the perimeter buffer yard to avoid swale conflicts.

South - Perimeter Buffer Yard
Required: 5', 3,115 SF (5 * 623) requires 9 shade trees and 18 shrubs
Provided: 8,795 SF, 9 shade trees and 18 shrubs

Interior Parking Lot Greenspace
Total Parking Area = 75,872 SF (53,297 + 22,575)
Required: 5% of total parking area = 3,794 SF
Provided: 6,361 sf

Interior Parking Lot Islands
1 parking island per 15 parking spaces
Required: 163 parking spaces requires 11 islands
Provided: 11+ islands

Interior Parking Lot Plantings
Each island shall have 1 tree and 5 shrubs
Required: 11 trees and 55 shrubs
Provided: 6 trees and 101 shrubs*** (shrubs are placed in islands without trees)
***Due to the secure parking area's lighting security concerns, 5 trees were replaced with 46 parking lot shrubs scattered evenly among the non-tree islands. Two proposed interior parking lot trees (east of the building) are planted east of the parking lot islands to avoid utility conflicts.

Supplementary Landscape Requirements
Shade Trees:
A minimum of 75 percent of all required trees shall be shade trees. Immediately upon planting, trees shall be a minimum of eight feet tall and shall have a minimum caliper (widest width of trunk) of two inches. Based on over 40 trees required, a minimum number of 5 tree species is required. Every development shall retain all existing trees 18 inches in diameter or more unless the retention of such trees would unreasonably burden the development.

Sight Triangle:
(1) At the intersection of two streets, or where a street intersects with an alley: a triangle defined by measuring 30 feet in length along each curb or edge of roadway from their point of intersection, the third side being a diagonal line connecting the first two. The city may require a greater distance in certain higher volume or higher speed traffic intersections.
(2) At the intersection of a driveway and street: two sides of the triangle defined by measuring 15 feet in length along the edge of the driveway and along the curb or edge of roadway line from their point of intersection, the third side being a diagonal line connecting the first two.

ZONING HATCH LEGEND

BUFFER YARD (LAWN AREA)

INTERIOR GREENSPACE

FOR CITY REVIEWER USE ONLY

TREE CODE LEGEND

'T' for Interior Parking Lot Tree
'S' for Interior Parking Lot Shrub
'B' for Buffer Yard Tree
'R' for Buffer Yard Shrub

0' 15' 30' 60'
SCALE IN FEET

MISSOURI 811
olsson
550 East St. Louis Street
Springfield, MO 65806
olsson.com
TEL 417.890.8802
FAX 417.890.8805
Olsson, Inc. Engineering MO State Cert. of Authority #001592
Olsson, Inc. Landscape Architecture MO State Cert. of Authority #2005000285

NIXA POLICE DEPARTMENT

305 N. LEEANN DRIVE
NIXA, MO 65714

INSIGHT DESIGN IDeA ARCHITECTS
112 S. Main St., Nixa, MO 65714 Ph: 417-724-8553
CJD Engineering | Energy | Innovation
olsson
METTEMEYER ENGINEERING
Chiodini ARCHITECTS
Architecture / Interior Design / Graphics
1401 S. Brentwood Blvd. | Suite 575 | St. Louis, Missouri 63144
314.725.0880 | info@chiodini.com

Reissue Date

Professional of Record

STATE OF MISSOURI
JANE K. DONELY EARNHART
NUMBER LA-00013
06-11-2025
LANDSCAPE ARCHITECT

DATE 06/11/2025

Copyright 2024 ©
These prints are the property of the architect and shall be usedonly for the project referenced above

Drawn by
BWS

Project #
024-00531

Date
2025.06.11

Drawing Title:
LANDSCAPE CALCULATIONS

Sheet:
L2.0

F:\2024\00501-01000\024-00531\40-Design\AutoCAD\Final Plans\Sheets\SDNLL_LSC02_024005S1.dwg
DATE: Jun 10, 2025 11:23am USER: lehringer

PLANTING NOTES

1. ALL WORK SHALL BE COORDINATED WITH THE WORK OF OTHER TRADES.
2. CONTRACTOR SHALL FIELD VERIFY THE LOCATION OF ALL UTILITY LINES AND OTHER ABOVE OR BELOW GROUND OBSTRUCTIONS SO THAT PROPER PRECAUTIONS SHALL BE TAKEN NOT TO DISTURB OR DAMAGE SUCH IMPROVEMENTS. REFER TO CIVIL AND MEP DRAWINGS FOR PROPOSED AND EXISTING UTILITY LOCATIONS.
3. STANDARDS SET FORTH IN "AMERICAN STANDARDS FOR NURSERY STOCK" REPRESENT GENERAL GUIDELINE SPECIFICATIONS ONLY AND WILL CONSTITUTE MINIMUM QUALITY REQUIREMENTS FOR PLANT MATERIAL.
4. THE LANDSCAPE ARCHITECT OR OWNER'S REPRESENTATIVE RESERVES THE RIGHT TO REJECT ANY PLANT MATERIAL NOT MEETING SPECIFICATIONS.
5. ALL TREES SHALL BE CALIPERED AND UNDERSIZED TREES SHALL BE REJECTED. SPECIFIED CALIPER MEASUREMENT FOR TREES SHALL BE MEASURED AT 6" ABOVE THE GRADE.
6. ANY MATERIAL WHICH DIES, OR DEFOLIATES (PRIOR TO ACCEPTANCE OF THE WORK) WILL BE PROMPTLY REMOVED AND REPLACED.
7. THE CONTRACTOR IS RESPONSIBLE FOR SOIL SAMPLING AND TESTING TO DETERMINE EXACT FERTILIZER REQUIREMENTS.
8. PLANTS AND OTHER MATERIALS ARE QUANTIFIED AND SUMMARIZED FOR THE CONVENIENCE OF THE CITY AND LOCAL GOVERNING BODIES. CONFIRM AND INSTALL SUFFICIENT QUANTITIES TO COMPLETE THE WORK AS DRAWN.
9. THE LANDSCAPE CONTRACTOR SHALL REMOVE ALL CONSTRUCTION DEBRIS AND MATERIALS INJURIOUS TO PLANT GROWTH FROM PLANTING PITS AND BEDS PRIOR TO BACKFILLING WITH PLANTING MIX.
10. BACKFILL TREE AND SHRUB PITS WITH A PREPARED PLANTING MIX AS FOLLOWS UNLESS NOTED OTHERWISE:
    - 2 PARTS BY VOLUME TOPSOIL
    - 1 PART BY VOLUME BROWN RIVER SAND
    - 1 PART BY VOLUME PEAT MOSS
    - 1 LB. COMMERCIAL SLOW RELEASE FERTILIZER PER CY OF MIX.
11. A PRE-EMERGENT HERBICIDE SHALL BE APPLIED TO ALL SHRUB BEDS PRIOR TO THE INSTALLATION OF ANY PLANT MATERIAL.
12. ALL PLANTING BEDS AND TREE PITS SHALL RECEIVE A MINIMUM OF 24" OF THE SPECIFIED PLANTING MIX.
13. ALL LANDSCAPE PLANTING AREAS, EXCLUDING TURF AREAS, SHALL BE MULCHED WITH A 4" LAYER OF 1"-2" DIAMETER CLEAN RIVER GRAVEL AFTER INSTALLATION OF PLANT MATERIAL. REFER TO DETAILS FOR LOCATION OF MULCH. USE SHREDDED HARDWOOD MULCH AROUND TREES IN LAWN AREAS. IF TREES OCCUR IN PLANTING BEDS, USE THE BED MULCH SPECIFIED.
14. ALL WOODY SHRUB PLANTING MATERIAL SHALL MEASURE A MINIMUM OF 24" IN HEIGHT AT THE TIME OF PLANTING, UNLESS OTHERWISE NOTED.
15. INSTALL METAL EDGING TO SEPARATE ALL MULCHED PLANTING AREAS AND GRAVEL AREAS FROM TURF AREAS. REFER TO DETAIL ON THIS SHEET.
16. INSTALL WOVEN BLACK LANDSCAPE WEED BARRIER FABRIC (DEWITT 20 YEAR, 4.1 OZ. WOVEN WEED BARRIER FABRIC OR EQUAL) IN ALL PLANTING BEDS AND UNDER GRAVEL MULCH AREAS. INSTALL PER MANUFACTURER'S SPECIFICATIONS.
17. THE PLAN IS SUBJECT TO CHANGES BASED ON PLANT SIZE AND MATERIAL AVAILABILITY. ANY DEVIATION TO THE APPROVED FINAL LANDSCAPE PLAN SHALL REQUIRE THE WRITTEN APPROVAL OF THE LANDSCAPE ARCHITECT PRIOR TO INSTALLATION.
18. LANDSCAPE CONTRACTOR SHALL PROVIDE UNIT COSTS AND POSSIBLE ALTERNATES FOR PLANT MATERIAL TO THE LANDSCAPE ARCHITECT.
19. KILL AND REMOVE ALL EXISTING WEEDS FROM THE SITE AREA PRIOR TO PLANTING.
20. THE ENTIRE SURFACE TO BE PLANTED SHALL BE REASONABLY SMOOTH AND FREE FROM STONES, ROOTS, OR OTHER DEBRIS.
21. PLANTING SEASON RUNS FROM MARCH 1ST TO JUNE 1ST AND SEPTEMBER 1ST TO NOVEMBER 1ST.
22. THE CONTRACTOR IS RESPONSIBLE FOR COMPLETELY MAINTAINING THE WORK (INCLUDING BUT NOT LIMITED TO; WATERING, MULCHING, SPRAYING, FERTILIZING, ETC.) OF ALL PLANTING AND TURF AREAS UNTIL TOTAL ACCEPTANCE OF THE WORK BY THE LANDSCAPE ARCHITECT AND OWNER.
23. LANDSCAPE CONTRACTOR IS TO BE RESPONSIBLE FOR WATERING ALL PLANT MATERIALS UNTIL FINAL ACCEPTANCE OF THE PROJECT.
24. CONTRACTOR WILL STAKE OR MARK ALL PLANT MATERIAL LOCATIONS PRIOR TO INSTALLATION. CONTRACTOR SHALL HAVE OWNERS REPRESENTATIVE APPROVE ALL STAKING PRIOR TO INSTALLATION.
25. REFER TO SPECIFICATIONS FOR ADDITIONAL INFORMATION

SOD NOTES

1. UNLESS OTHERWISE NOTED ON PLANS, ALL DISTURBED AREAS SHALL BE SODDED WITH TURF-TYPE TALL FESCUE SOD WITH A MINIMUM OF 3 CULTIVARS.
2. ALL LAWN AREAS SHALL RECEIVE A MINIMUM 6-INCH DEPTH OF TOPSOIL COMPACTED TO 85% MAXIMUM DENSITY AT OPTIMUM MOISTURE CONTENT.
3. THE ENTIRE SURFACE TO BE SODDED SHALL BE REASONABLY SMOOTH AND FREE FROM STONES, ROOTS, OR OTHER DEBRIS.
4. SOD SHALL BE MACHINE STRIPPED AT A UNIFORM SOIL THICKNESS OF APPROXIMATELY 1-1/4 INCH (PLUS OR MINUS 1/4-INCH). THE MEASUREMENT FOR THICKNESS SHALL EXCLUDE TOP GROWTH AND THATCH, AND SHALL BE DETERMINED AT THE TIME OF CUTTING IN THE FIELD. PRECAUTIONS SHALL BE TAKEN TO PREVENT DRYING AND HEATING. SOD DAMAGED BY HEAT AND DRY CONDITIONS, AND SOD CUT MORE THAN 18 HOURS BEFORE BEING INCORPORATED INTO THE WORK SHALL NOT BE USED.
5. HANDLING OF SOD SHALL BE DONE IN A MANNER THAT WILL PREVENT TEARING, BREAKING, DRYING AND OTHER DAMAGE. PROTECT EXPOSED ROOTS FROM DEHYDRATION. DO NOT DELIVER MORE SOD THAN CAN BE LAID WITHIN 24 HOURS.
6. MOISTEN PREPARED SURFACE IMMEDIATELY PRIOR TO LAYING SOD. WATER THOROUGHLY AND ALLOW SURFACE TO DRY BEFORE INSTALLING SOD. FERTILIZE, HARROW OR RAKE FERTILIZER IN THE TOP 1-1/2-INCHES OF TOPSOIL, AT A UNIFORM RATE OF ONE POUND OF NITROGEN PER 1000 S.F.
7. SOD SHALL BE CAREFULLY PLACED IN THE DIRECTION PARALLEL WITH THE SLOPE OF THE AREA TO BE SODDED. SOD STRIPS SHALL BE BUTTED TOGETHER BUT NOT OVERLAPPED WITH THE SEAMS STAGGERED ON EACH ROW.
8. FERTILIZER SHALL BE 20-10-5 COMMERCIAL FERTILIZER OF THE GRADE, TYPE, AND FORM SPECIFIED AND SHALL COMPLY WITH THE RULES OF THE STATE OF MISSOURI DEPT. OF AGRICULTURE. FERTILIZER SHALL BE IDENTIFIED ACCORDING TO THE PERCENT N, P, K, IN THAT ORDER.
9. ALL SOD IN DRAINAGE WAYS SHALL BE PINNED. ALL SOD ON SLOPES GREATER THAN 5:1 SHALL BE PINNED.
10. SATURATE SOD WITH FINE WATER SPRAY WITHIN TWO HOURS OF PLANTING. DURING FIRST WEEK AFTER PLANTING, WATER DAILY OR MORE FREQUENTLY AS NECESSARY TO MAINTAIN MOIST SOIL TO A MINIMUM DEPTH OF FOUR INCHES BELOW SOD.
11. CONTRACTOR SHALL PROVIDE FULL MAINTENANCE FOR SODDED TURF GRASS FOR A PERIOD OF 30 DAYS AFTER THE DATE OF FINAL ACCEPTANCE. AT THE END OF THE MAINTENANCE PERIOD, A HEALTHY, WELL-ROOTED, EVEN-COLORED, VIABLE TURF MUST BE ESTABLISHED. THE TURF GRASS SHALL BE FREE OF WEEDS, OPEN JOINTS, BARE AREAS, AND SURFACE IRREGULARITIES.

NOTE:
CONTRACTOR SHALL PROVIDE, INSTALL AND UTILIZE WATERING BAGS FOR ALL NEW TREES. EACH TREE SHALL INCLUDE ONE TREEGATOR WATERING BAG, OR APPROVED EQUIVALENT. BAGS SHALL REMAIN IN PLACE FOLLOWING FINAL COMPLETION FOR USE BY OWNER.

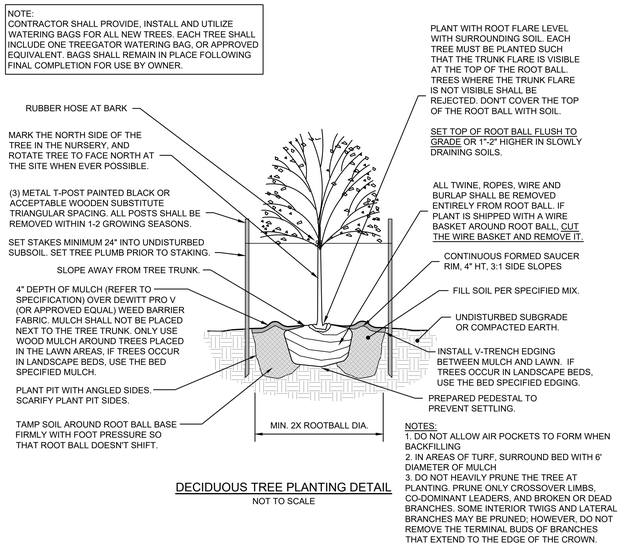

DECIDUOUS TREE PLANTING DETAIL
NOT TO SCALE

NOTES:
1. DO NOT ALLOW AIR POCKETS TO FORM WHEN BACKFILLING
2. IN AREAS OF TURF, SURROUND BED WITH 6' DIAMETER OF MULCH
3. DO NOT HEAVILY PRUNE THE TREE AT PLANTING. PRUNE ONLY CROSSOVER LIMBS, CO-DOMINANT LEADERS, AND BROKEN OR DEAD BRANCHES. SOME INTERIOR TWIGS AND LATERAL BRANCHES MAY BE PRUNED. HOWEVER, DO NOT REMOVE THE TERMINAL BUDS OF BRANCHES THAT EXTEND TO THE EDGE OF THE CROWN.

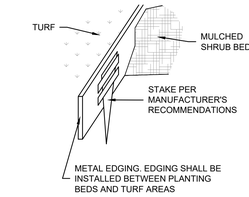

METAL EDGING DETAIL
(AROUND PERIMETER OF SHRUB PLANTING BED)
NOT TO SCALE

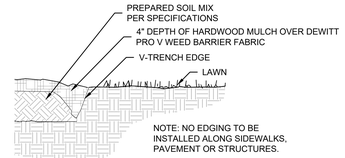

V-TRENCH EDGING DETAIL
(AROUND TREES IN LAWN AREA)
NOT TO SCALE

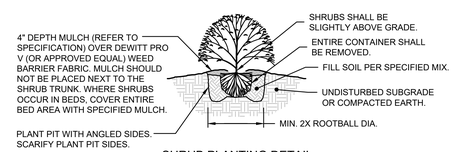

SHRUB PLANTING DETAIL
NOT TO SCALE

NOTES:
1. MINIMUM ROOT SPREAD TO BE IN ACCORDANCE WITH AAN STANDARDS
2. PRUNE DAMAGED LIMBS OR ROOTS AFTER INSTALLATION
3. MAKE SURE ROOTS DO NOT DRY OUT DURING INSTALLATION
4. SOAK GENEROUSLY TO COMPACT AND SETTLE

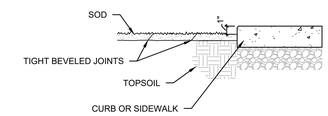

SOD INSTALLATION
NOT TO SCALE

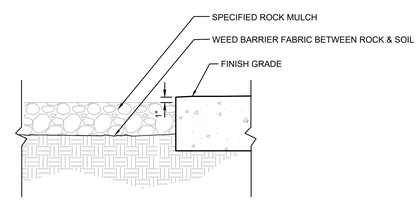

ADJACENT TO PAVEMENT

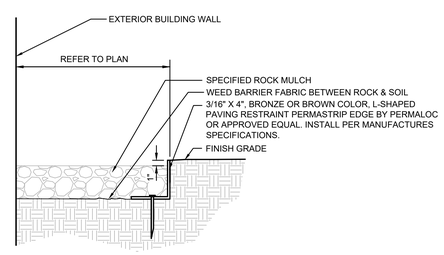

ROCK MULCH DETAIL
NOT TO SCALE

NIXA POLICE DEPARTMENT
305 N. LEEANN DRIVE
NIXA, MO 65714

INSIGHT DESIGN iDeA ARCHITECTS
112 S. Main St., Nixa, MO 65714 Ph: 417-724-8553

CJD Engineering | Energy | Innovation

olsson

METTEMEYER ENGINEERING

Chiodini ARCHITECTS
Architecture / Interior Design / Graphics
1401 S. Brentwood Blvd. | Suite 375 | St. Louis, Missouri 63144
314-725-0888 | arch@chiodini.com

Reissue Date

Professional of Record

STATE OF MISSOURI
JANE K. DONEY-EARNHART
NUMBER LA-0001.3
LANDSCAPE ARCHITECT

DATE 06/11/2025

Copyright 2024 ©
These prints are the property of the architect and shall be usedonly for the project referenced above

Drawn by
RAR

Project #
024-00531

Date
2025.06.11

Drawing Title:
LANDSCAPE DETAILS

Sheet:
L3.0

MISSOURI 811
olsson
550 East St. Louis Street
Springfield, MO 65806
olsson.com
TEL 417.890.8802
FAX 417.890.8805
Olsson, Inc. Engineering MO State Cert. of Authority #001592
Olsson, Inc. Landscape Architecture MO State Cert. of Authority #2005000285

F:\2024\00501-010\00\024-00531\40-Design\AutoCAD\Final Plans\Sheets\SDN\L_DTL_02400531.dwg
DATE: Jun 10, 2025 11:24am USER: bstringer

SIGNAGE LEGEND

- S01 FRONT DESK HOURS & AFTER HOURS ASSIST. - WHITE VINYL LETTERS
- S02 PUSH BUTTON FOR POLICE ASSIST. - POLYMER SIGN
- S03 POLICE ASSISTANCE PHONE - POLYMER SIGN
- S04 WELCOME - DIMENSIONAL STAINLESS STEEL LETTERS ABOVE 101 CLERK WINDOW
- S05 MEETING ROOM DEDICATION NAME - DIMENSIONAL STAINLESS STEEL LETTERS ABOVE 105 DOUBLE DOORS
- S06 RESTRICTED AREA - POLYMER SIGN
- S07 ROOM NAME - POLYMER SIGN
- S08 RESTROOM - POLYMER SIGN
- S09 STANDARD ROOM NAME & NUMBER WITH PAPER INSERT - POLYMER SIGN
- S10 AED SIGNAGE - POLYMER PLAQUE
- S11 LOCKER ROOM MURAL - CUSTOM STENCIL
- S12A FITNESS/TRAINING QUOTES - VINYL LETTERS
- S12B FITNESS/TRAINING DECAL - CUSTOM WALL DECAL
- S13 RECOGNITION WALL - WHITE DIMENSIONAL VINYL LETTERS AND FLAG GRAPHIC
- S14A ROLE CALL QUOTE - VINYL LETTERS + DECAL
- S14B CORRIDOR QUOTE - BLACK VINYL LETTERS
- S15 STORM SHELTER - POLYMER SIGN
- S16 STORM SHELTER IDENTIFICATION MAP - POLYMER SIGN
- S17 STORM SHELTER INFORMATIONAL SIGNAGE - POLYMER SIGN
- S18 NOTICE NOW LEAVING TORNADO SHELTER - POLYMER SIGN

- ES01 RESTRICTED AREA, POLICE VEHICLES ONLY - EXTERIOR POST MOUNTED SIGN
- ES02 RESTRICTED AREA, POLICE VEHICLES ONLY - EXTERIOR GATE MOUNTED SIGN
- ES03 SALLY PORT DOOR NUMBER - EXTERIOR BLACK DIMENSIONAL LETTERS
- ES04 SAFE EXCHANGE ZONE SIGNAGE - EXTERIOR POST MOUNTED SIGN
- ES05 NO PARKING SIGN - EXTERIOR POST MOUNTED SIGN (RE: A200 FOR SIZE AND LAYOUT)
- ES06 MAIN ENTRY BACKLIT NIXA PD CREST SIGN - EXTERIOR MONUMENT SIGN
- ES07 BRONZE DEDICATION PLAQUE - EXTERIOR SIGNAGE
- ES08 POLICE BLACK VINYL LETTERS - EXTERIOR SIGNAGE ON POLICE GLOBES
- ES09 RESTRICTED AREA - EXTERIOR VINYL SIGN
- ES10 EXTERIOR MONUMENT SIGN
- ES11 MAIN ENTRY DOOR SIGNAGE - EXTERIOR VINYL SIGN
- ES12 ACCESSIBLE PARKING SIGNAGE - POST MOUNT (RE: CIVIL FOR DETAILS)
- ES13 BUILDING NUMBER SIGNAGE - WHITE VINYL LETTERS

NOTE:
1) REFER TO SPECIFICATIONS
2) REFER TO A050 ARCHITECTURAL SITE PLAN AND A200 FOR LOCATION OF EXTERIOR SITE SIGNAGE.
3) REFER TO A850 FURNITURE & SIGNAGE PLAN FOR INTERIOR LOCATIONS OF SIGNAGE.

COVERED PARKING STRUCTURE
A. THE COVERED PARKING STRUCTURE IS TO BE AN ALUMINUM CANTILEVER STRUCTURE, SUPPORTED VIA COLUMNS IN THE CENTER SIDEWALK / PAVING.
B. PARKING STRUCTURE SHOULD HAVE CENTRAL DRAINAGE WITH GUTTER(S) AND DOWNSPOUTS TO DAYLIGHT TO GRADE.
C. THE PARKING STRUCTURE SHOULD HAVE CEILING / DECK-MOUNTED LIGHT FIXTURES THAT ARE WATER-TIGHT, AIR-TIGHT, AND RATED FOR EXTERIOR USE.

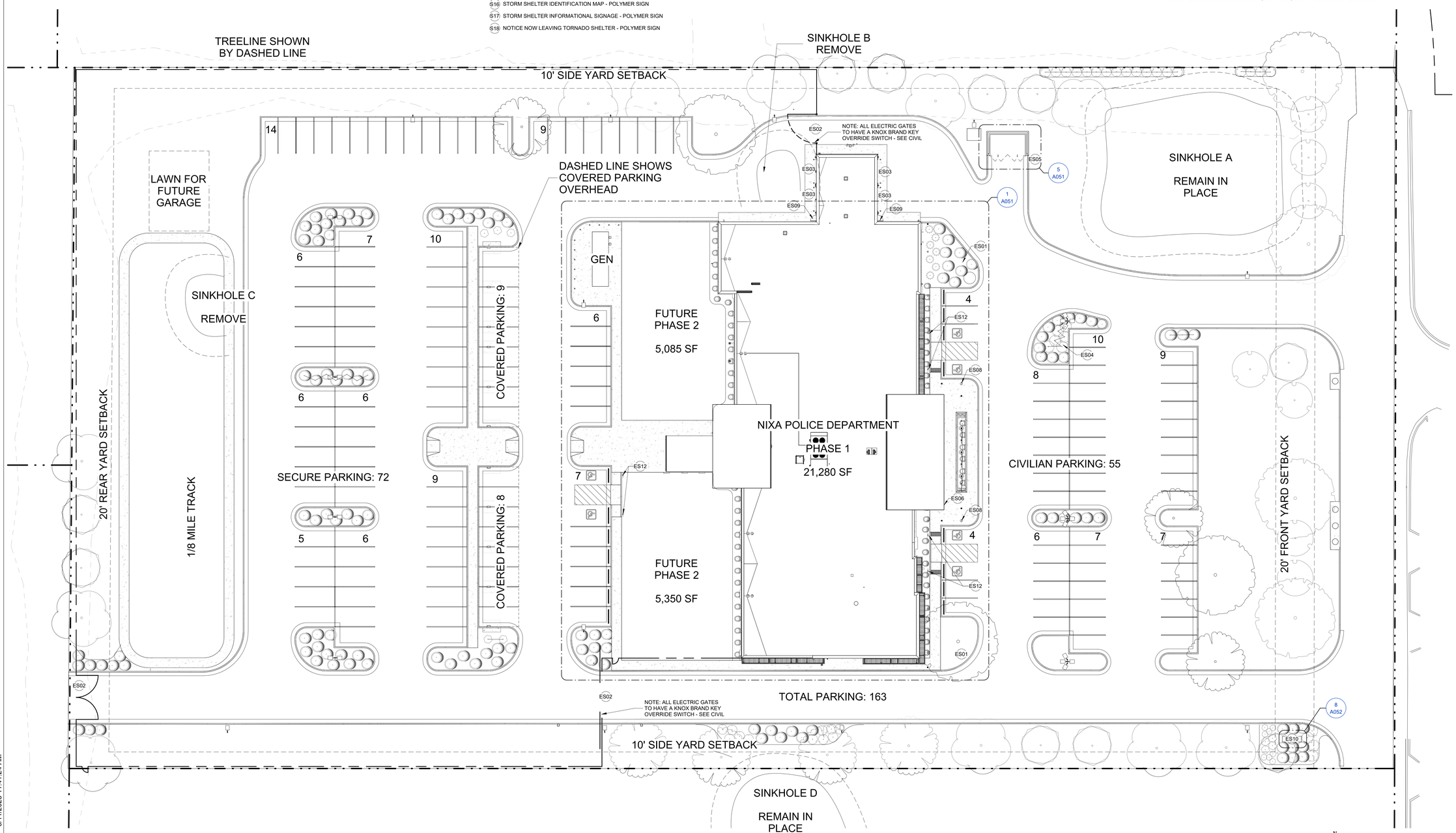

1 ARCHITECTURAL SITE PLAN
1" = 20'-0"

PRINTED: 6/11/2025 11:41:24 AM

NIXA POLICE DEPARTMENT

305 N LEEANN DR
NIXA, MO 65714

IDeA ARCHITECTS
112 S. Main St., Nixa, MO 65714 Ph: 417-724-8553
CJD Engineering | Energy | Innovation
olsson
METTEMEYER ENGINEERING LLC
Christini ARCHITECTS
Architecture / Interior Design / Graphics
1401 S. Brentwood Blvd. | Suite 275 | St. Louis, Missouri 63144
314-725-5580 | arch@christini.com

Reissue Date

Professional of Record

STATE OF MISSOURI
NATHAN P. RAPP
NUMBER A-6000
ARCHITECT

DATE 2025-06-11

Copyright 2025 ©
These prints are the property of the architect and shall be usedonly for the project referenced above

Architect
LMH / NPR

Project #
24-003

Date
2025-06-11

Drawing Title:
ARCHITECTURAL SITE PLAN

Sheet:
A050

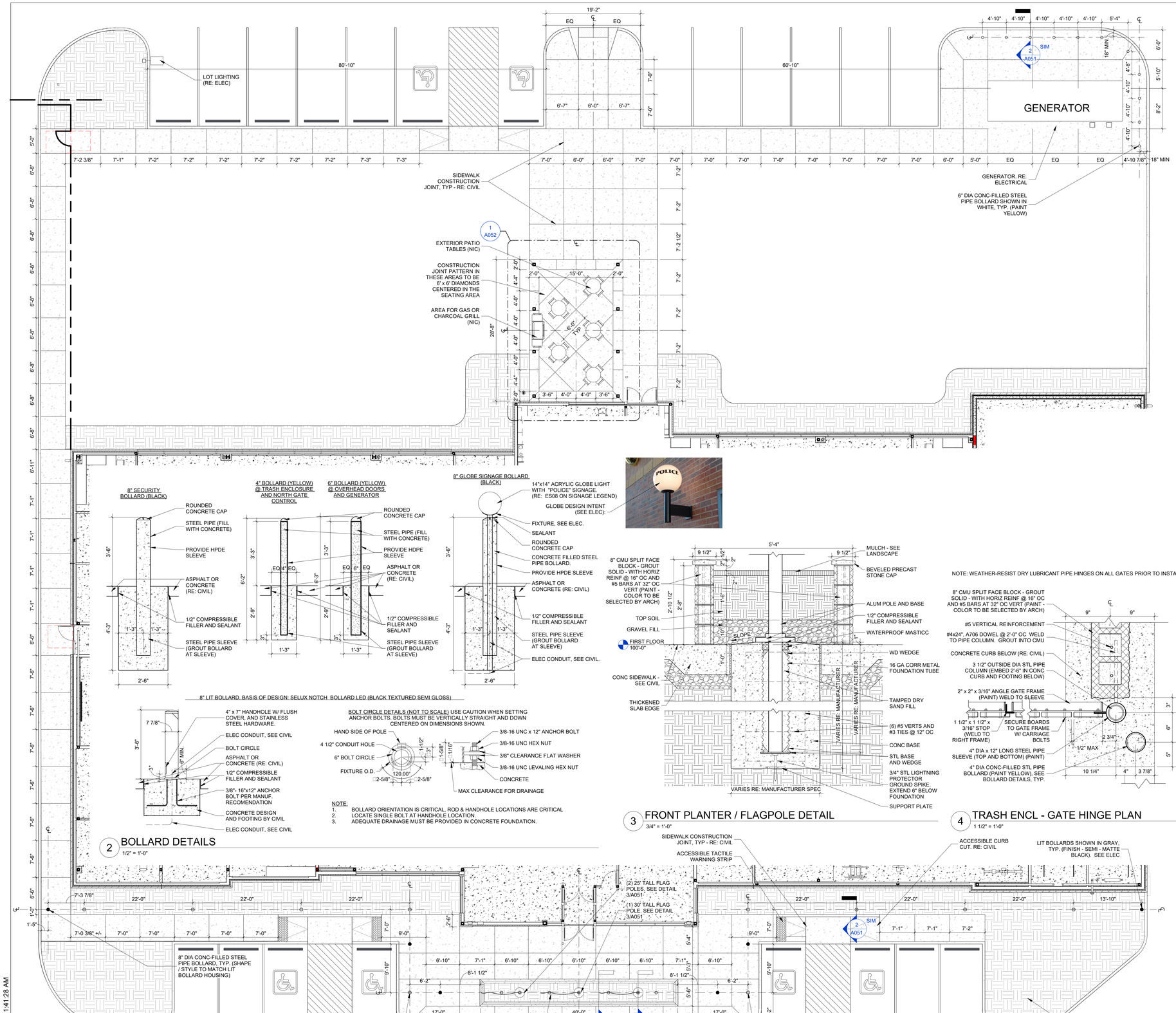

2 BOLLARD DETAILS
1/2" = 1'-0"

3 FRONT PLANTER / FLAGPOLE DETAIL
3/4" = 1'-0"

4 TRASH ENCL - GATE HINGE PLAN
1 1/2" = 1'-0"

5 TRASH ENCLOSURE PLAN
1/4" = 1'-0"

6 TRASH ENCLOSURE - SECTION - SPLIT FACE CMU
3/4" = 1'-0"

1 ENLARGED SITE PLAN - BUILDING HARDSCAPE
1/8" = 1'-0"

7 TRASH ENCLOSURE - GATE ELEVATION - SPLIT FACE CMU
3/4" = 1'-0"

PRIN'TED: 6/11/2025 11:41:28 AM

NIXA POLICE DEPARTMENT

305 N LEEANN DR
NIXA, MO 65714

INSIGHT DESIGN IDeA ARCHITECTS
112 S. Main St., Nixa, MO 65714 Ph: 417-724-8553

CJD Engineering | Energy | Innovation

olsson

METTEMEYER ENGINEERING LLC

Chiodini ARCHITECTS
Architecture / Interior Design / Graphics
1401 S. Brentwood Blvd. | Suite 675 | St. Louis, Missouri 63144
314-726-0888 | archi@chiodini.com

Reissue Date

Professional of Record

STATE OF MISSOURI
NATHAN P. RAPP
NUMBER
ARCHITECT

DATE 2025-06-11

Copyright 2025 ©
These prints are the property of the architect and shall be usedonly for the project referenced above

Architect
LMH / NPR

Project #
24-003

Date
2025-06-11

Drawing Title:
ENLARGED ARCHITECTURAL SITE PLANS

Sheet:
A051

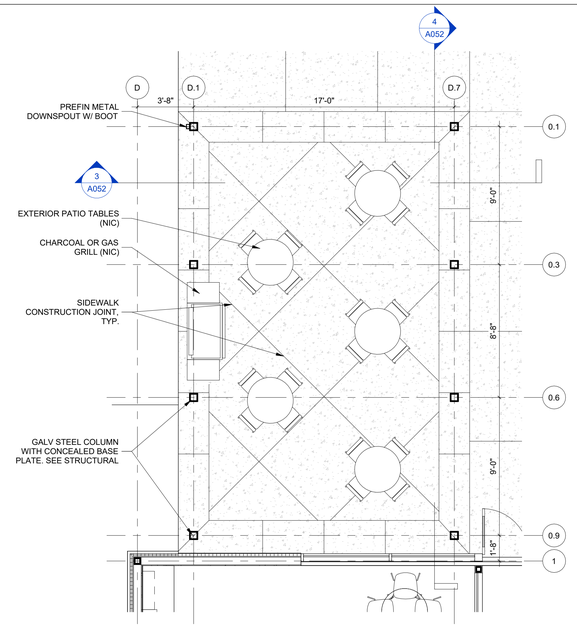

1 ENLARGED PLAN - SHADE STRUCTURE PLAN
1/4" = 1'-0"

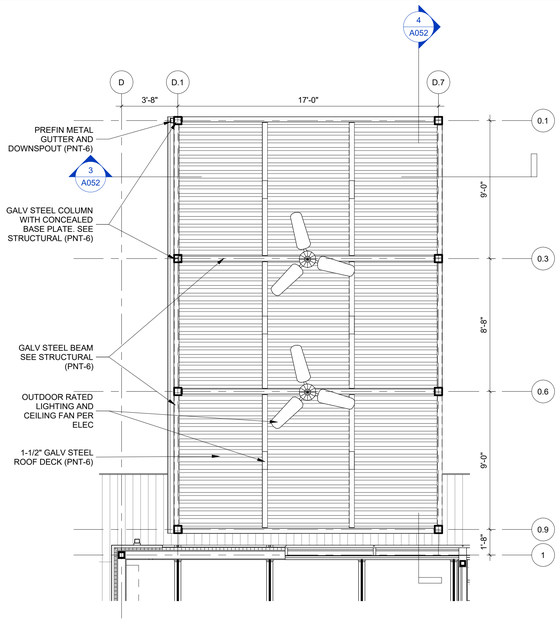

2 REFLECTED CEILING PLAN - SHADE STRUCTURE
1/4" = 1'-0"

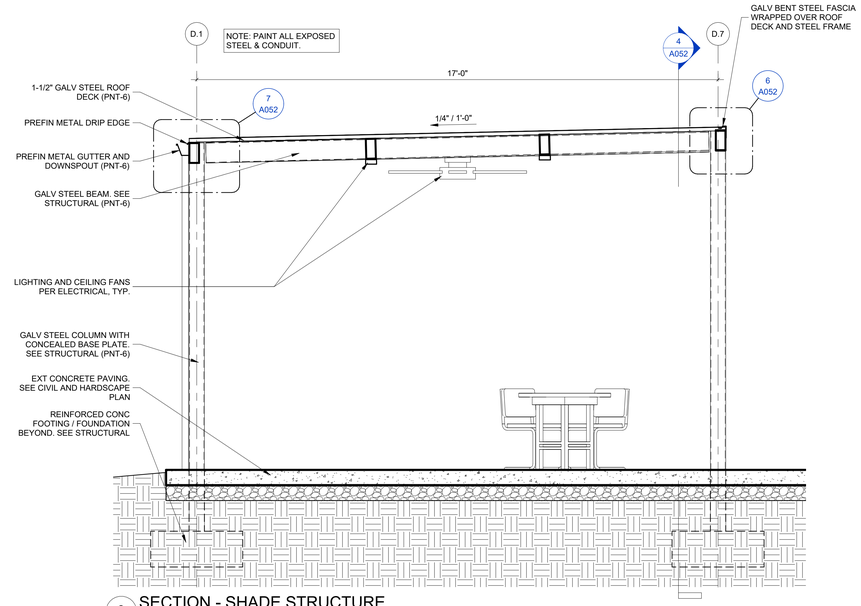

3 SECTION - SHADE STRUCTURE
1/2" = 1'-0"

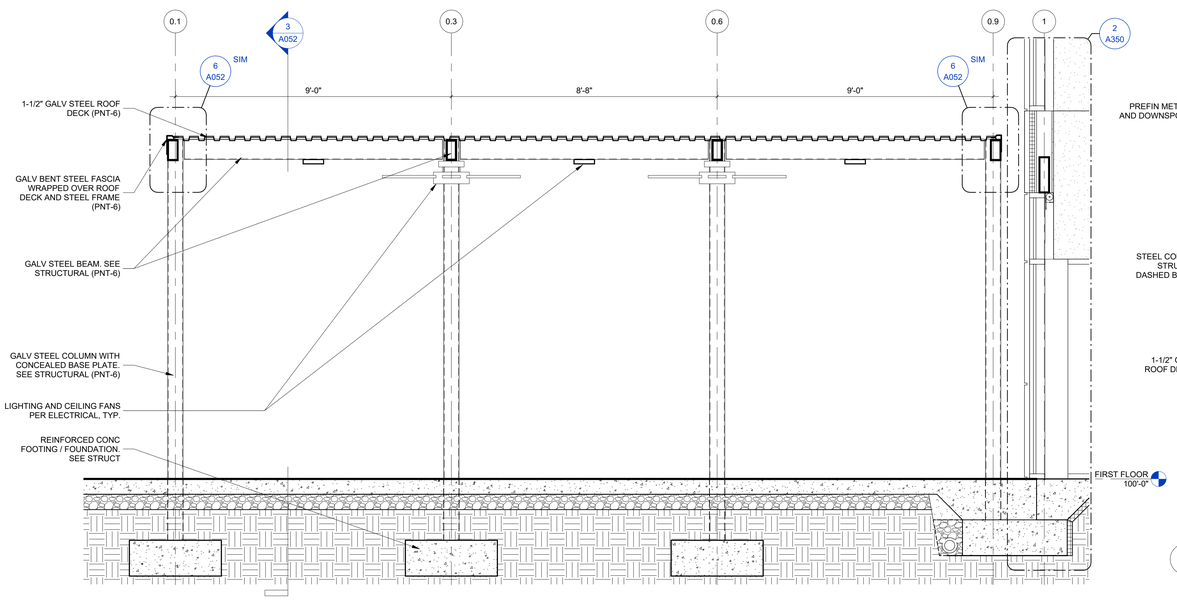

4 SECTION - SHADE STRUCTURE
1/2" = 1'-0"

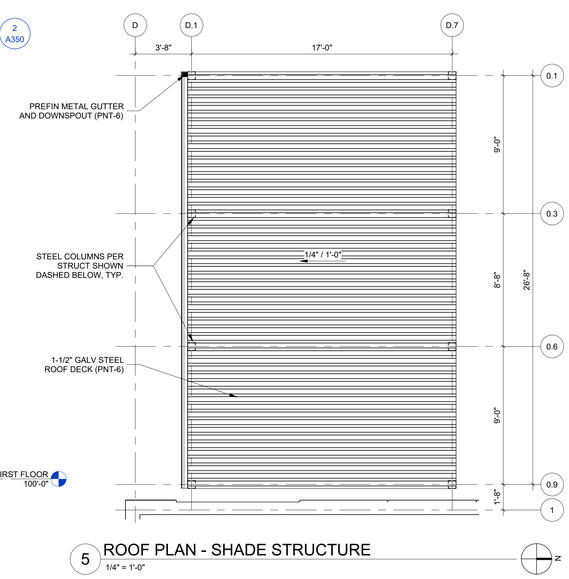

5 ROOF PLAN - SHADE STRUCTURE
1/4" = 1'-0"

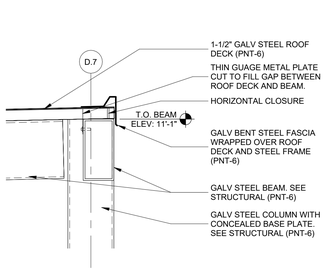

6 DETAIL - SHADE STRUCTURE
1 1/2" = 1'-0"

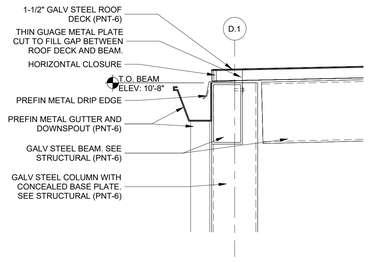

7 DETAIL - SHADE STRUCTURE
1 1/2" = 1'-0"

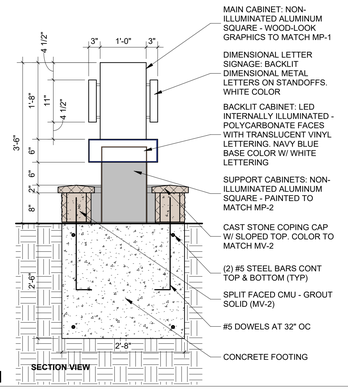

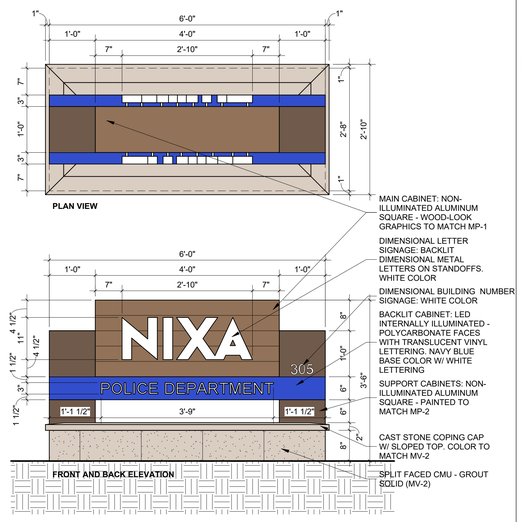

8 EXTERIOR MONUMENT SIGN
3/4" = 1'-0"

NIXA POLICE DEPARTMENT

305 N LEEANN DR
NIXA, MO 65714

INSPIRE DESIGN IDeA ARCHITECTS
112 S. Main St., Nixa, MO 65714 Ph: 417-724-8553

CJD Engineering | Energy | Innovation

olsson

METTEMEYER ENGINEERING LLC

Chiodini ARCHITECTS
Architecture / Interior Design / Graphics
1401 S. Brentwood Blvd. | Suite 370 | St. Louis, Missouri 63144
314-725-5088 | ann@jchiodini.com

Reissue Date

Professional of Record

STATE OF MISSOURI
NATHAN P. RAPP
NUMBER A-2001038751
PROFESSIONAL ARCHITECT

DATE 2025-06-11

Copyright 2025 ©
These prints are the property of the architect and shall be usedonly for the project referenced above

Architect
LMH / NPR

Project #
24-003

Date
2025-06-11

Drawing Title:
SHADE STRUCTURE DETAILS

Sheet:
A052

PRINTED: 6/11/2025 11:41:31 AM

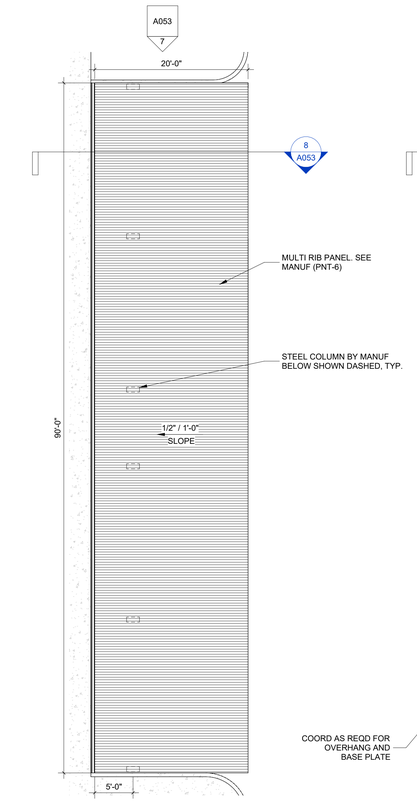

1 ROOF PLAN - COVERED PARKING STRUCTURE (NORTH)
1/8" = 1'-0"

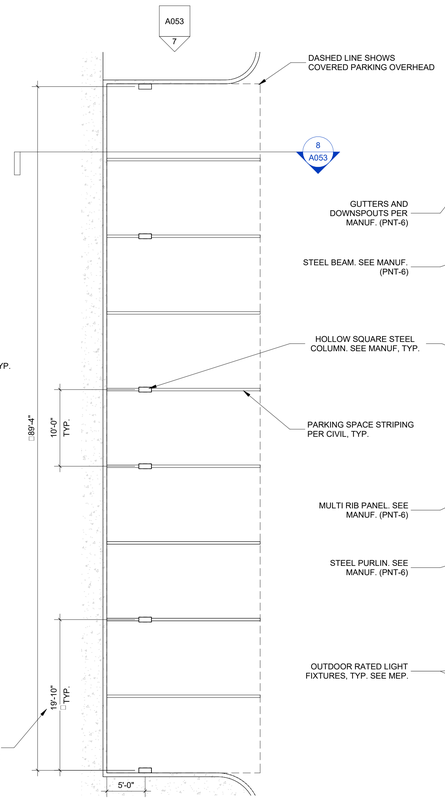

2 FLOOR PLAN - COVERED PARKING STRUCTURE (NORTH)
1/8" = 1'-0"

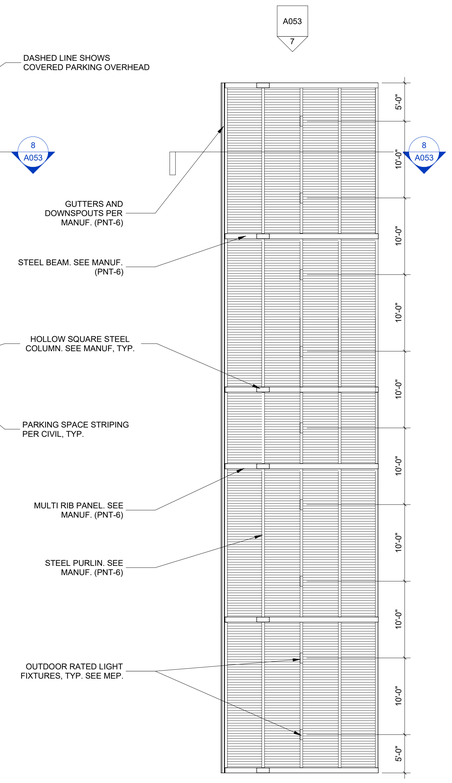

3 REFLECTED CEILING PLAN - PARKING SHADE STRUCTURE (NORTH)
1/8" = 1'-0"

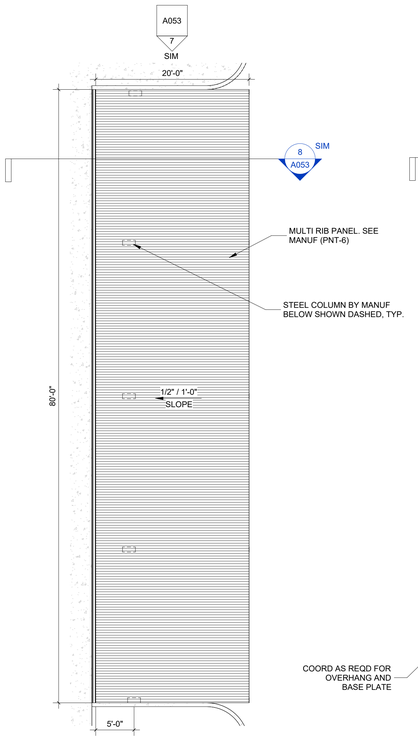

4 ROOF PLAN - COVERED PARKING STRUCTURE (SOUTH)
1/8" = 1'-0"

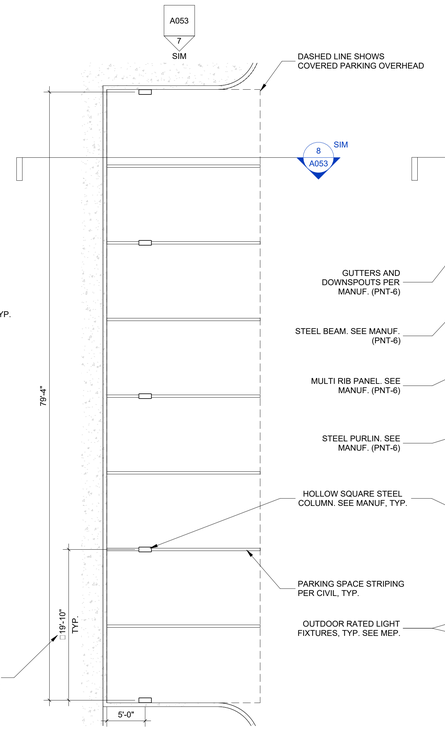

5 FLOOR PLAN - COVERED PARKING STRUCTURE (SOUTH)
1/8" = 1'-0"

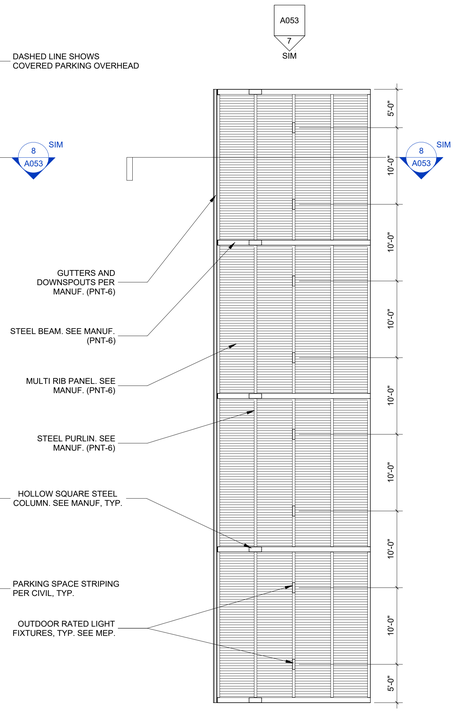

6 REFLECTED CEILING PLAN - PARKING SHADE STRUCTURE (SOUTH)
1/8" = 1'-0"

PROVIDE GUTTERS AND DOWNSPOUTS AS ADD ALTERNATE

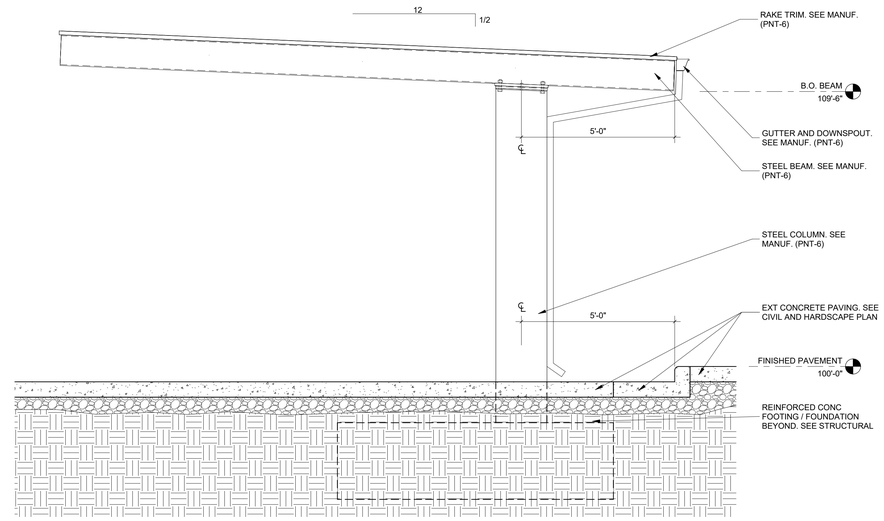

7 ELEVATION - COVERED PARKING STRUCTURE
1/2" = 1'-0"

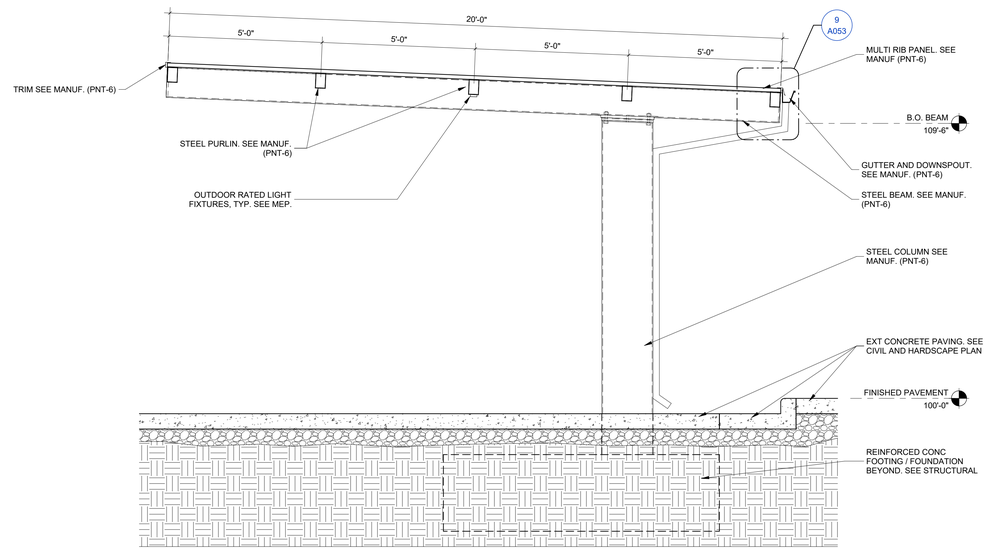

8 SECTION - COVERED PARKING STRUCTURE
1/2" = 1'-0"

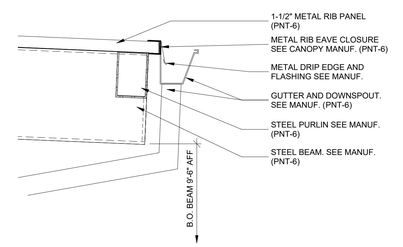

9 DETAIL - EAVE @ PARKING STRUCTURE
1 1/2" = 1'-0"

NIXA POLICE DEPARTMENT

305 N LEEANN DR
NIXA, MO 65714

INSIGHT DESIGN IDeA ARCHITECTS
112 S. Main St., Nixa, MO 65714 Ph: 417-724-8553

CJD Engineering | Energy | Innovation

olsson

METTEMEYER ENGINEERING LLC

Chiodini ARCHITECTS
Architecture / Interior Design / Graphics
1401 S. Brentwood Blvd. | Suite #251 St. Louis, Missouri 63144
314-25-0080 | arch@chiodini.com

Reissue Date

Professional of Record

STATE OF MISSOURI
NATHAN P. RAPP
NUMBER A-2001038751
ARCHITECT

DATE 2025-06-11

Copyright 2025 ©
These prints are the property of the architect and shall be usedonly for the project referenced above

Architect
LMH / NPR

Project #
24-003

Date
2025-06-11

Drawing Title:
COVERED PARKING STRUCTURE

Sheet:
A053

PRINTED: 6/11/2025 11:41:34 AM

KEYNOTES - FLOOR & ROOF PLAN	
3.01	BOLLARD @ OHD, TYP. SEE DETAIL 23/A500
3.02	BOLLARD, SEE SHEET A051, TYP.
4.01	CONTRACTOR TO VERIFY STUDS ALIGN WITH CMU FURRING. SEE DETAIL 8/A500
5.01	WALL-MOUNTED METAL LADDER. SEE DETAIL 12/A510
5.02	EXPOSED STRUCTURAL STEEL COLUMN, SEE STRUCTURAL. PAINT TO MATCH CEILING. SEE FINISH SCHEDULE.
5.03	GALVANIZED STEEL SHADE STRUCTURE. SEE STRUCTURAL.
5.04	EXPOSED STRUCTURAL STEEL CROSS BRACING, SEE STRUCTURAL. PAINT TO MATCH CEILING, TYP. SEE FINISH SCHEDULE
6.01	CASEWORK, COUNTERTOP, & UPPER CABINETS. SEE INTERIOR ELEVATIONS
6.02	12" DEEP CASEWORK, BUILT IN DISPLAY CASE
7.01	CRICKET - MIN 1/4" PER FOOT SLOPE
7.02	SCUPPER AND DOWNSPOUT WITH OVERFLOW
7.03	PREFIN METAL GUTTER AND DOWNSPOUT TO DAYLIGHT ON TPO ROOF. WATER FLOW SHOULD NOT EMPTY NEXT TO MECHANICAL OR ELECTRICAL EQUIPMENT, OR VENTS. ADJUST DOWNSPOUT AS NEEDED.
7.04	DOWNSPOUT NOZZLE
7.05	PRIMARY ROOF DRAIN PIPE. COLLECT BELOW GRADE. SEE CIVIL
7.06	SECONDARY OVERFLOW ROOF DRAIN PIPE - SEE PLUMBING
7.08	TRENCH DRAIN, RE: MEP
7.09	FIRE DEPARTMENT INLET CONNECTION (RE: PLUMBING)
8.01	PROVIDE TRANSPARENT BALLISTICS WINDOW FILM AT INTERIOR GLAZING IN LOCATIONS SHOWN. SEE EXTERIOR ELEVATONS FOR BALLISTICS FILM ON EXTERIOR GLAZING
8.02	PROVIDE SEMI-TRANSPARENT WINDOW FILM FOR VISUAL SCREENING AT INTERIOR OFFICE GLAZING. SEE FINISH SCHEDULE.
8.03	6' x 28' TEMPERED GLASS FITNESS MIRROR. SEE INTERIOR ELEVATIONS
8.04	ALUMINUM-FRAMED BULLET-RESISTANT (LEVEL 3 MIN) TRANSACTION WINDOW WITH TRANSCACTION TRAY. BLACK FINISH. BASIS OF DESIGN: ARMORTEX VI-TW-AL-SP
8.05	FORWARD SET GLASS @ INTERIOR ALUMINUM STOREFRONT IN LOCATIONS SHOWN TO CREATE ROOM ON MULLIONS FOR VESTIBULE PUSH BUTTONS
8.06	3'x3' ROOF HATCH WITH YELLOW SAFETY RAILS
10.01	MOVEABLE INDUSTRIAL FLOOR-MOUNTED SHELVING. OFOI

KEYNOTES - FLOOR & ROOF PLAN	
10.02	HIGH DENSITY MOBILE SHELVING UNITS - MANUAL OPERATION BY OTHERS.
10.03	BIOMETRIC PASS-TRHOUGH LOCKERS AND PACKAGE DROP BOX BY OTHERS.
10.06	PROVIDE FARADAY CAGE. SEE ALTERNATE 01 ON G001
10.07	4' x 8' GLASS DRY ERASE BOARD WITH MARKER TRAY. PROVIDED AND INSTALLED BY GC
10.08	FULL HEIGHT DEMOUNTABLE PARTITIONS. BASIS OF DESIGN: KI WALL GENIUS. SOLID WALLS ON 3 SIDES OF OFFICE AND GLASS WALL AT OFFICE FRONT (DOOR SIDE).
10.09	WRX WEAPONS STORAGE RACKS BY OTHERS.
10.10	24" W x 25" D x 7' TALL LOCKERS WITH VENTILATED BOOT BOX BY OTHERS
10.11	STORAGE CABINETS AND DESK, BY OTHERS.
10.12	STAINLESS STEEL WORK STATION BY OTHERS.
10.13	QUARTER MASTER STORAGE BY OTHERS
10.15	GUN WORK BENCH BY OTHERS
10.16	RECESSED FIREARM CABINET BY OTHERS.
10.17	30" DEEP METAL AWNING WITH INTEGRAL GUTTER & DOWNSPOUT - BASIS OF DESIGN - LAWRENCE FABRIC LFS-LFA
10.18	SEMI-RECESSED AED CABINET
10.19	SURFACE MOUNTED FIRE EXTINGUISHER CABINET WITH 10 LB ABC FIRE EXTINGUISHER
10.20	SEMI-RECESSED FIRE EXTINGUISHER CABINET AND 10LB ABC FIRE EXTINGUISHER
11.01	VENDING MACHINES (NIC)
11.02	CFCI DRYING CABINET. BASIS OF DESIGN: AIR SCIENCE SAFEKEEPER 72" FDC-010-A
11.03	TELEVISION MONITER BY GC. (SEE LV) CONTRACTOR TO PROVIDE FRT WD BLOCKING FOR TV MOUNT
11.04	TELEVISION MONITER ON SWIVEL MOUNT BY GC. (SEE LV) CONTRACTOR TO PROVIDE FRT WD BLOCKING FOR SWIVEL TV MOUNT.
11.05	CFCI MOVEABLE DUCTLESS FUME HOOD. BASIS OF DESIGN: AIR SCIENCE P5-24-XT-CART-A
11.06	CFCI DISHWASHER
11.07	CFCI UNDER COUNTER ICE MAKER
11.08	SECURE PACKAGE RECEIVER - BASIS OF DESIGN ARMORTEX SSPR-1818
11.09	CFCI FRIDGE / FREEZER SEE ELEC/PLUMBING
12.01	48" TALL PARTIAL-HEIGHT CUBICLE WALLS WITH TRANSLUCENT GLASS UPPER DIVIDERS. BASIS OF DESIGN: KIMBALL INTERNATIONAL XSITE POWERED PANEL SYSTEM BY FURNITURE VENDOR.
22.01	EMERGENCY SHOWER & EYE WASH STATION - SEE PLUMBING
22.03	DECK-MOUNTED EMERGENCY EYE WASH STATION - SEE PLUMBING
23.01	ROOFTOP MECHANICAL UNIT. SEE MECHANICAL
26.01	DISCONNECT SWITCH. SEE ELECTRICAL

GENERAL FLOOR PLAN NOTES:

A. REFER TO COVER SHEET FOR GENERAL PROJECT NOTES.
B. EGRESS DOORS SHALL NOT LOCK AGAINST THE DIRECTION OF EGRESS TRAVEL AT ANY TIME.
C. INTERIOR DIMENSIONS ARE GIVEN TO THE FINISHED FACE OF STEEL STUD OR CMU, UNLESS NOTED OTHERWISE.
D. ALL ROUGH OPENINGS FOR DOORS TO BE INSTALLED 4" FROM CLOSEST PARTITION UNLESS OTHERWISE NOTED.
E. PROVIDE CONTROL JOINTS IN GYPSUM BOARD AT SPACING NOT EXCEEDING 30'-0" OC, HORIZONTAL OR VERTICAL, AT ALL RUNS OF WALL OR SOFFIT. CONTROL JOINTS SHALL CONSIST OF DOUBLE STUDS OR DOUBLE FURRING CHANNELS PROVIDED BY CONTRACTOR. IN FIRE RATED PARTITIONS, PROVIDE FIRE RATED CONTROL JOINTS. DO NOT ALLOW BRACING TO SPAN ACROSS CONTROL JOINTS.
F. REFER TO PLAN FOR FIRE EXTINGUISHER CABINET (FEC) LOCATIONS. VERIFY SIZE AND CONFIGURATION WITH PROJECT MANUAL AND LIFE SAFETY SHEET PRIOR TO INSTALLATION. **OWNER SHALL PROVIDE ADDITIONAL FIRE EXTINGUISHER CABINETS (FEC) IF REQUESTED BY FIRE MARSHAL DURING INSPECTION OR WALK THROUGH, TO BE INSTALLED BY CONTRACTOR. COORDINATE ALL LOCATIONS WITH ARCHITECT PRIOR TO INSTALLATION.**
G. FURNITURE SHOWN IN HALFTONE ON PLAN

DEMO / NEW CONSTRUCTION LEGEND

- NEW CONSTRUCTION: UNRATED, PARTIAL-HEIGHT WALL TO CEILING
- NEW CONSTRUCTION: UNRATED, FULL-HEIGHT WALL TO DECK
- NEW CONSTRUCTION: 1 HOUR FIRE SEPARATION
- NEW CONSTRUCTION: 2 HOUR FIRE SEPARATION

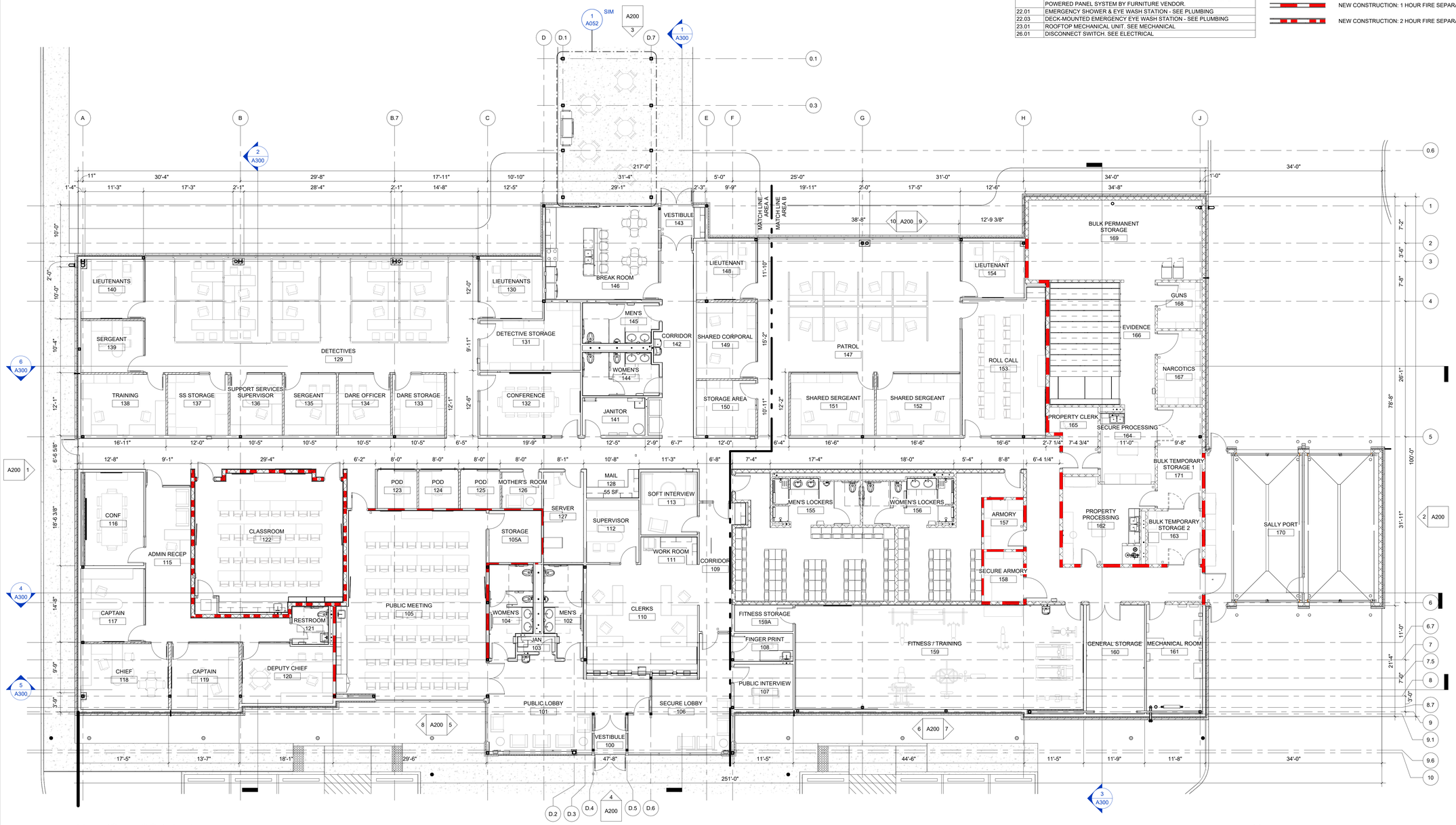

1 FIRST FLOOR PLAN
1/8" = 1'-0"

PRINTED: 6/11/2025 11:41:39 AM

NIXA POLICE DEPARTMENT

305 N LEEANN DR
NIXA, MO 65714

INSIGHT DESIGN IDeA ARCHITECTS
112 S. Main St., Nixa, MO 65714 Ph: 417-724-8553

CJD Engineering | Energy | Innovation

olsson

METTEMEYER ENGINEERING LLC

Chidini ARCHITECTS
Architecture / Interior Design / Graphics
1401 S. Brentwood Blvd. | Suite 370 | St. Louis, Missouri 63144
314-725-5088 | arch@chidini.com

Reissue Date

Professional of Record

STATE OF MISSOURI
NATHAN P. RAPP
NUMBER
ARCHITECT

DATE 2025-06-11

Copyright 2025 ©
These prints are the property of the architect and shall be usedonly for the project referenced above

Architect
LMH / NPR

Project #
24-003

Date
2025-06-11

Drawing Title:
FLOOR PLANS

Sheet:
A100

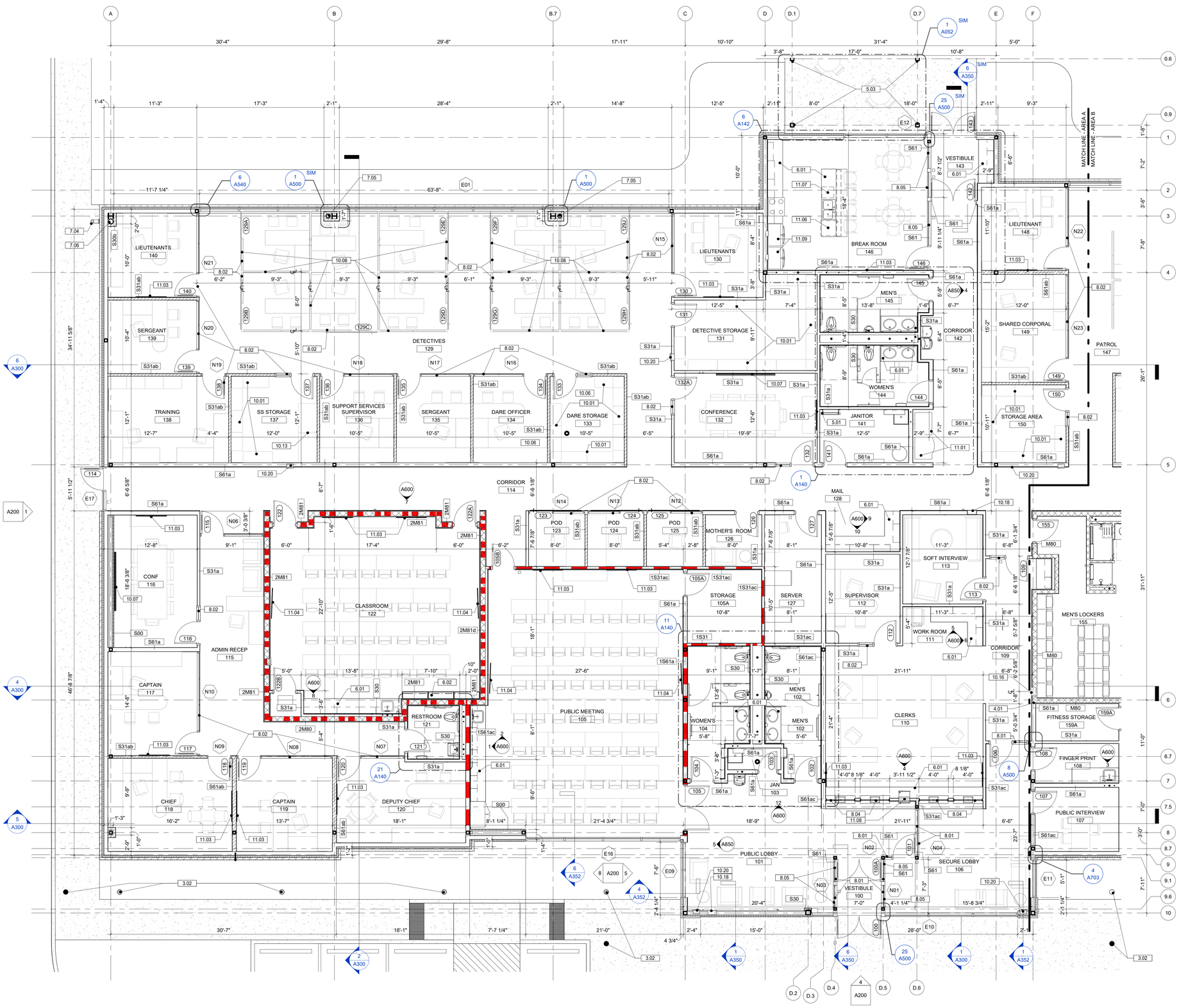

1 ENLARGED FLOOR PLAN - AREA A
3/16" = 1'-0"

GENERAL FLOOR PLAN NOTES:

A. REFER TO COVER SHEET FOR GENERAL PROJECT NOTES.
B. EGRESS DOORS SHALL NOT LOCK AGAINST THE DIRECTION OF EGRESS TRAVEL AT ANY TIME.
C. INTERIOR DIMENSIONS ARE GIVEN TO THE FINISHED FACE OF STEEL STUD OR CMU, UNLESS NOTED OTHERWISE.
D. ALL ROUGH OPENINGS FOR DOORS TO BE INSTALLED 4" FROM CLOSEST PARTITION UNLESS OTHERWISE NOTED.
E. PROVIDE CONTROL JOINTS IN GYPSUM BOARD AT SPACING NOT EXCEEDING 30'-0" OC, HORIZONTAL OR VERTICAL, AT ALL RUNS OF WALL OR SOFFIT. CONTROL JOINTS SHALL CONSIST OF DOUBLE STUDS OR DOUBLE FURRING CHANNELS PROVIDED BY CONTRACTOR. IN FIRE RATED PARTITIONS, PROVIDE FIRE RATED CONTROL JOINTS. DO NOT ALLOW BRACING TO SPAN ACROSS CONTROL JOINTS.
F. REFER TO PLAN FOR FIRE EXTINGUISHER CABINET (FEC) LOCATIONS. VERIFY SIZE AND CONFIGURATION WITH PROJECT MANUAL AND LIFE SAFETY SHEET PRIOR TO INSTALLATION. **OWNER SHALL PROVIDE ADDITIONAL FIRE EXTINGUISHER CABINETS (FEC) IF REQUESTED BY FIRE MARSHAL DURING INSPECTION OR WALK THROUGH, TO BE INSTALLED BY CONTRACTOR. COORDINATE ALL LOCATIONS WITH ARCHITECT PRIOR TO INSTALLATION.**
G. FURNITURE SHOWN IN HALFTONE ON PLAN

DEMO / NEW CONSTRUCTION LEGEND

- NEW CONSTRUCTION: UNRATED, PARTIAL-HEIGHT WALL TO CEILING
- NEW CONSTRUCTION: UNRATED, FULL-HEIGHT WALL TO DECK
- NEW CONSTRUCTION: 1 HOUR FIRE SEPARATION
- NEW CONSTRUCTION: 2 HOUR FIRE SEPARATION

KEYNOTES - FLOOR & ROOF PLAN	
3.01	BOLLARD @ OHD, TYP. SEE DETAIL 23/A500
3.02	BOLLARD. SEE SHEET A051, TYP.
4.01	CONTRACTOR TO VERIFY STUDS ALIGN WITH CMU FURRING. SEE DETAIL 8/A500
5.01	WALL-MOUNTED METAL LADDER. SEE DETAIL 12/A510
5.02	EXPOSED STRUCTURAL STEEL COLUMN, SEE STRUCTURAL. PAINT TO MATCH CEILING. SEE FINISH SCHEDULE
5.03	GALVANIZED STEEL SHADE STRUCTURE. SEE STRUCTURAL.
5.04	EXPOSED STRUCTURAL STEEL CROSS BRACING, SEE STRUCTURAL. PAINT TO MATCH CEILING, TYP. SEE FINISH SCHEDULE
6.01	CASEWORK, COUNTERTOP, & UPPER CABINETS. SEE INTERIOR ELEVATIONS
6.02	12" DEEP CASEWORK, BUILT IN DISPLAY CASE
7.01	CRICKET - MIN 1/4" PER FOOT SLOPE
7.02	SCUPPER AND DOWNSPOUT WITH OVERFLOW
7.03	PREFIN METAL GUTTER AND DOWNSPOUT TO DAYLIGHT ON TPO ROOF. WATER FLOW SHOULD NOT EMPTY NEXT TO MECHANICAL OR ELECTRICAL EQUIPMENT, OR VENTS. ADJUST DOWNSPOUT AS NEEDED.
7.04	DOWNSPOUT NOZZLE
7.05	PRIMARY ROOF DRAIN PIPE. COLLECT BELOW GRADE. SEE CIVIL
7.06	SECONDARY OVERFLOW ROOF DRAIN PIPE - SEE PLUMBING
7.08	TRENCH DRAIN, RE: MEP
7.09	FIRE DEPARTMENT INLET CONNECTION (RE: PLUMBING)
8.01	PROVIDE TRANSPARENT BALLISTICS WINDOW FILM AT INTERIOR GLAZING IN LOCATIONS SHOWN. SEE EXTERIOR ELEVATONS FOR BALLISTICS FILM ON EXTERIOR GLAZING
8.02	PROVIDE SEMI-TRANSPARENT WINDOW FILM FOR VISUAL SCREENING AT INTERIOR OFFICE GLAZING. SEE FINISH SCHEDULE.
8.03	6' x 28' TEMPERED GLASS FITNESS MIRROR. SEE INTERIOR ELEVATIONS
8.04	ALUMINUM-FRAMED BULLET-RESISTANT (LEVEL 3 MIN) TRANSACTION WINDOW WITH TRANSCACTION TRAY. BLACK FINISH. BASIS OF DESIGN: ARMORTEX WI-TW-AL-SP
8.05	FORWARD SET GLASS @ INTERIOR ALUMINUM STOREFRONT IN LOCATIONS SHOWN TO CREATE ROOM ON MULLIONS FOR VESTIBULE PUSH BUTTONS
8.06	3'x3' ROOF HATCH WITH YELLOW SAFETY RAILS
10.01	MOVEABLE INDUSTRIAL FLOOR-MOUNTED SHELVING. OFOI
10.02	HIGH DENSITY MOBILE SHELVING UNITS - MANUAL OPERATION BY OTHERS.
10.03	BIOMETRIC PASS-TRHOUGH LOCKERS AND PACKAGE DROP BOX BY OTHERS.
10.06	PROVIDE FARADAY CAGE. SEE ALTERNATE 01 ON G001
10.07	4' x 8" GLASS DRY ERASE BOARD WITH MARKER TRAY. PROVIDED AND INSTALLED BY GC
10.08	FULL HEIGHT DEMOUNTABLE PARTITIONS. BASIS OF DESIGN: KI WALL GENIUS. SOLID WALLS ON 3 SIDES OF OFFICE AND GLASS WALL AT OFFICE FRONT (DOOR SIDE).
10.09	WRX WEAPONS STORAGE RACKS BY OTHERS.
10.10	24" W x 25" D x 7' TALL LOCKERS WITH VENTILATED BOOT BOX BY OTHERS
10.11	STORAGE CABINETS AND DESK. BY OTHERS.
10.12	STAINLESS STEEL WORK STATION BY OTHERS.
10.13	QUARTER MASTER STORAGE BY OTHERS
10.15	GUN WORK BENCH BY OTHERS
10.16	RECESSED FIREARM CABINET BY OTHERS
10.17	30" DEEP METAL AWNING WITH INTEGRAL GUTTER & DOWNSPOUT - BASIS OF DESIGN - LAWRENCE FABRIC LFS-LFA
10.18	SEMI-RECESSED AED CABINET
10.19	SURFACE MOUNTED FIRE EXTINGUISHER CABINET WITH 10 LB ABC FIRE EXTINGUISHER
10.20	SEMI-RECESSED FIRE EXTINGUISHER CABINET AND 10LB ABC FIRE EXTINGUISHER
11.01	VENDING MACHINES (NIC)
11.02	CFCI DRYING CABINET. BASIS OF DESIGN: AIR SCIENCE SAFEKEEPER 72" FDC-010-A
11.03	TELEVISION MONITER BY GC. (SEE LV) CONTRACTOR TO PROVIDE FRT WD BLOCKING FOR TV MOUNT
11.04	TELEVISION MONITER ON SWIVEL MOUNT BY GC. (SEE LV) CONTRACTOR TO PROVIDE FRT WD BLOCKING FOR SWIVEL TV MOUNT.
11.05	CFCI MOVEABLE DUCTLESS FUME HOOD. BASIS OF DESIGN: AIR SCIENCE P5-24-XT-CART-A
11.06	CFCI DISHWASHER
11.07	CFCI UNDER COUNTER ICE MAKER
11.08	SECURE PACKAGE RECEIVER - BASIS OF DESIGN ARMORTEX SSPR-1818
11.09	CFCI FRIDGE / FREEZER SEE ELEC/PLUMBING
12.01	48" TALL PARTIAL-HEIGHT CUBICLE WALLS WITH TRANSLUCENT GLASS UPPER DIVIDERS. BASIS OF DESIGN: KIMBALL INTERNATIONAL XSITE POWERED PANEL SYSTEM BY FURNITURE VENDOR.
22.01	EMERGENCY SHOWER & EYE WASH STATION - SEE PLUMBING
22.03	DECK-MOUNTED EMERGENCY EYE WASH STATION - SEE PLUMBING
23.01	ROOFTOP MECHANICAL UNIT. SEE MECHANICAL
26.01	DISCONNECT SWITCH. SEE ELECTRICAL

NIXA POLICE DEPARTMENT

305 N LEEANN DR
NIXA, MO 65714

INSIGHT DESIGN IDeA ARCHITECTS
112 S. Main St., Nixa, MO 65714 Ph: 417-724-8553

CJD Engineering | Energy | Innovation

olsson

METTEMEYER ENGINEERING LLC

Chiodini ARCHITECTS
Architecture / Interior Design / Graphics
1401 S. Brentwood Blvd. | Suite 975 | St. Louis, Missouri 63144
314-726-0888 | info@chiodini.com

Reissue Date

Professional of Record

STATE OF MISSOURI — NATHAN P. RAPP NUMBER A-2001038754 — ARCHITECT

DATE 2025-06-11

Copyright 2025 ©
These prints are the property of the architect and shall be usedonly for the project referenced above

Architect
LMH / NPR

Project #
24-003

Date
2025-06-11

Drawing Title:
ENLARGED FLOOR PLANS - AREA A

Sheet:
A101

PRINTED: 6/11/2025 11:41:46 AM

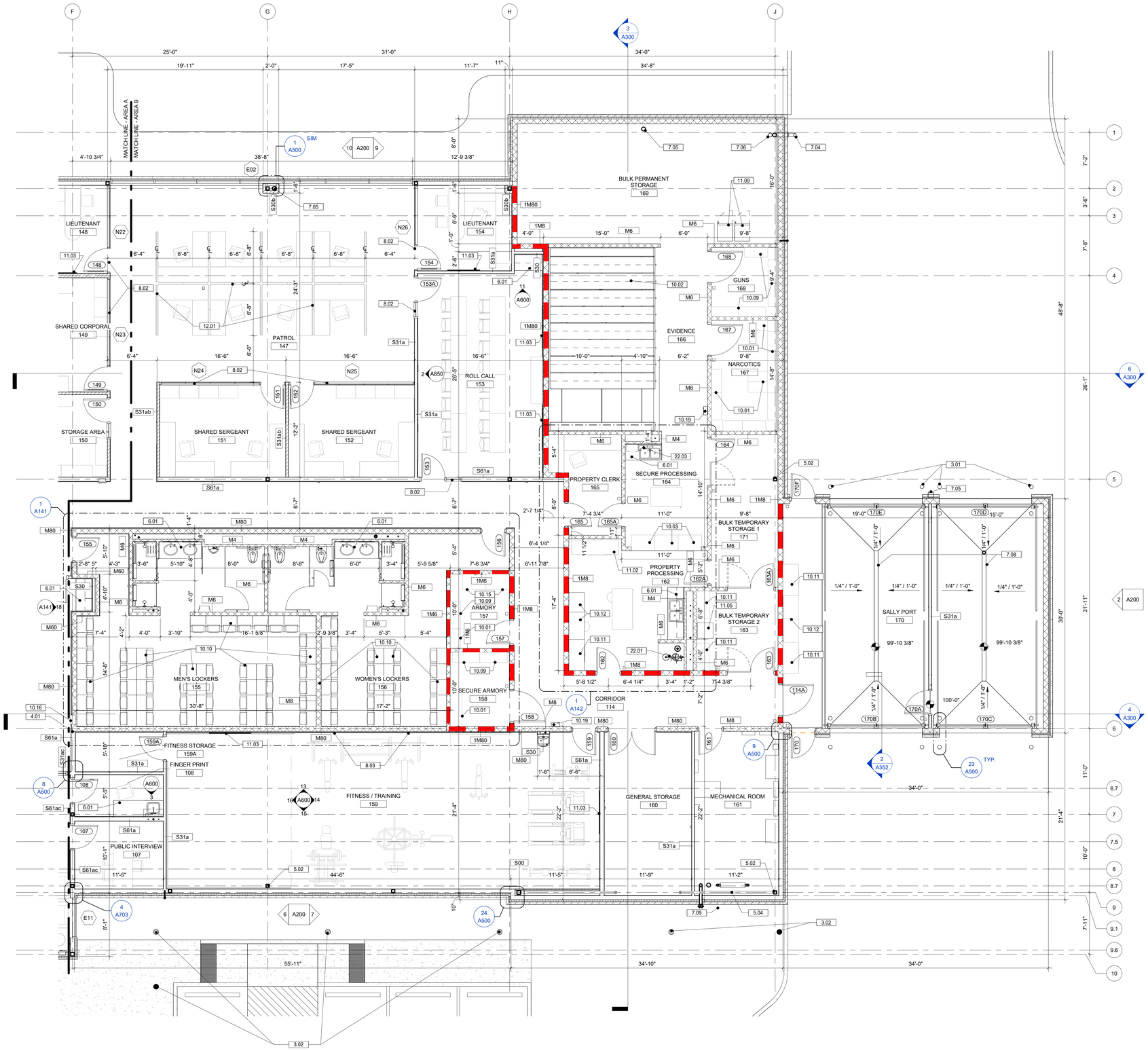

1 ENLARGED FLOOR PLAN - AREA B
3/16" = 1'-0"

GENERAL FLOOR PLAN NOTES:

A. REFER TO COVER SHEET FOR GENERAL PROJECT NOTES.
B. EGRESS DOORS SHALL NOT LOCK AGAINST THE DIRECTION OF EGRESS TRAVEL AT ANY TIME.
C. INTERIOR DIMENSIONS ARE GIVEN TO THE FINISHED FACE OF STEEL STUD OR CMU, UNLESS NOTED OTHERWISE.
D. ALL ROUGH OPENINGS FOR DOORS TO BE INSTALLED 4" FROM CLOSEST PARTITION UNLESS OTHERWISE NOTED.
E. PROVIDE CONTROL JOINTS IN GYPSUM BOARD AT SPACING NOT EXCEEDING 30'-0" OC, HORIZONTAL OR VERTICAL, AT ALL RUNS OF WALL OR SOFFIT. CONTROL JOINTS SHALL CONSIST OF DOUBLE STUDS OR DOUBLE FURRING CHANNELS PROVIDED BY CONTRACTOR. IN FIRE RATED PARTITIONS, PROVIDE FIRE RATED CONTROL JOINTS. DO NOT ALLOW BRACING TO SPAN ACROSS CONTROL JOINTS.
F. REFER TO PLAN FOR FIRE EXTINGUISHER CABINET (FEC) LOCATIONS. VERIFY SIZE AND CONFIGURATION WITH PROJECT MANUAL AND LIFE SAFETY SHEET PRIOR TO INSTALLATION. **OWNER SHALL PROVIDE ADDITIONAL FIRE EXTINGUISHER CABINETS (FEC) IF REQUESTED BY FIRE MARSHAL DURING INSPECTION OR WALK THROUGH, TO BE INSTALLED BY CONTRACTOR. COORDINATE ALL LOCATIONS WITH ARCHITECT PRIOR TO INSTALLATION.**
G. FURNITURE SHOWN IN HALFTONE ON PLAN

DEMO / NEW CONSTRUCTION LEGEND

- NEW CONSTRUCTION: UNRATED, PARTIAL-HEIGHT WALL TO CEILING
- NEW CONSTRUCTION: UNRATED, FULL-HEIGHT WALL TO DECK
- NEW CONSTRUCTION: 1 HOUR FIRE SEPARATION
- NEW CONSTRUCTION: 2 HOUR FIRE SEPARATION

KEYNOTES - FLOOR & ROOF PLAN	
3.01	BOLLARD @ OHD, TYP. SEE DETAIL 23/A500
3.02	BOLLARD. SEE SHEET A051, TYP.
4.01	CONTRACTOR TO VERIFY STUDS ALIGN WITH CMU FURRING. SEE DETAIL 8/A500
5.01	WALL-MOUNTED METAL LADDER. SEE DETAIL 12/A510
5.02	EXPOSED STRUCTURAL STEEL COLUMN, SEE STRUCTURAL. PAINT TO MATCH CEILING. SEE FINISH SCHEDULE
5.03	GALVANIZED STEEL SHADE STRUCTURE. SEE STRUCTURAL.
5.04	EXPOSED STRUCTURAL STEEL CROSS BRACING, SEE STRUCTURAL. PAINT TO MATCH CEILING. TYP. SEE FINISH SCHEDULE
6.01	CASEWORK, COUNTERTOP, & UPPER CABINETS. SEE INTERIOR ELEVATIONS
6.02	12" DEEP CASEWORK, BUILT IN DISPLAY CASE
7.01	CRICKET - MIN 1/4" PER FOOT SLOPE
7.02	SCUPPER AND DOWNSPOUT WITH OVERFLOW
7.03	PREFIN METAL GUTTER AND DOWNSPOUT TO DAYLIGHT ON TPO ROOF. WATER FLOW SHOULD NOT EMPTY NEXT TO MECHANICAL OR ELECTRICAL EQUIPMENT, OR VENTS. ADJUST DOWNSPOUT AS NEEDED.
7.04	DOWNSPOUT NOZZLE
7.05	PRIMARY ROOF DRAIN PIPE. COLLECT BELOW GRADE. SEE CIVIL
7.06	SECONDARY OVERFLOW ROOF DRAIN PIPE - SEE PLUMBING
7.08	TRENCH DRAIN. RE: MEP
7.09	FIRE DEPARTMENT INLET CONNECTION (RE: PLUMBING)
8.01	PROVIDE TRANSPARENT BALLISTICS WINDOW FILM AT INTERIOR GLAZING IN LOCATIONS SHOWN. SEE EXTERIOR ELEVATONS FOR BALLISTICS FILM ON EXTERIOR GLAZING
8.02	PROVIDE SEMI-TRANSPARENT WINDOW FILM FOR VISUAL SCREENING AT INTERIOR OFFICE GLAZING. SEE FINISH SCHEDULE.
8.03	6' x 28' TEMPERED GLASS FITNESS MIRROR. SEE INTERIOR ELEVATIONS
8.04	ALUMINUM-FRAMED BULLET-RESISTANT (LEVEL 3 MIN) TRANSACTION WINDOW WITH TRANSCACTION TRAY. BLACK FINISH. BASIS OF DESIGN: ARMORTEX WI-TW-AL-SP
8.05	FORWARD SET GLASS @ INTERIOR ALUMINUM STOREFRONT IN LOCATIONS SHOWN TO CREATE ROOM ON MULLIONS FOR VESTIBULE PUSH BUTTONS
8.06	3'x3' ROOF HATCH WITH YELLOW SAFETY RAILS
10.01	MOVEABLE INDUSTRIAL FLOOR-MOUNTED SHELVING. OFOI
10.02	HIGH DENSITY MOBILE SHELVING UNITS - MANUAL OPERATION BY OTHERS.
10.03	BIOMETRIC PASS-TRHOUGH LOCKERS AND PACKAGE DROP BOX BY OTHERS.
10.06	PROVIDE FARADAY CAGE. SEE ALTERNATE 01 ON G001
10.07	4' x 8" GLASS DRY ERASE BOARD WITH MARKER TRAY. PROVIDED AND INSTALLED BY GC
10.08	FULL HEIGHT DEMOUNTABLE PARTITIONS. BASIS OF DESIGN: KI WALL GENIUS. SOLID WALLS ON 3 SIDES OF OFFICE AND GLASS WALL AT OFFICE FRONT (DOOR SIDE).
10.09	WRX WEAPONS STORAGE RACKS BY OTHERS.
10.10	24" W x 25" D x 7' TALL LOCKERS WITH VENTILATED BOOT BOX BY OTHERS
10.11	STORAGE CABINETS AND DESK. BY OTHERS.
10.12	STAINLESS STEEL WORK STATION BY OTHERS.
10.13	QUARTER MASTER STORAGE BY OTHERS
10.15	GUN WORK BENCH BY OTHERS
10.16	RECESSED FIREARM CABINET BY OTHERS
10.17	30" DEEP METAL AWNING WITH INTEGRAL GUTTER & DOWNSPOUT - BASIS OF DESIGN - LAWRENCE FABRIC LFS-LFA
10.18	SEMI-RECESSED AED CABINET
10.19	SURFACE MOUNTED FIRE EXTINGUISHER CABINET WITH 10 LB ABC FIRE EXTINGUISHER
10.20	SEMI-RECESSED FIRE EXTINGUISHER CABINET AND 10LB ABC FIRE EXTINGUISHER
11.01	VENDING MACHINES (NIC)
11.02	CFCI DRYING CABINET. BASIS OF DESIGN: AIR SCIENCE SAFEKEEPER 72" FDC-010-A
11.03	TELEVISION MONITER BY GC. (SEE LV) CONTRACTOR TO PROVIDE FRT WD BLOCKING FOR TV MOUNT
11.04	TELEVISION MONITER ON SWIVEL MOUNT BY GC. (SEE LV) CONTRACTOR TO PROVIDE FRT WD BLOCKING FOR SWIVEL TV MOUNT.
11.05	CFCI MOVEABLE DUCTLESS FUME HOOD. BASIS OF DESIGN: AIR SCIENCE P5-24-XT-CART-A
11.06	CFCI DISHWASHER
11.07	CFCI UNDER COUNTER ICE MAKER
11.08	SECURE PACKAGE RECEIVER - BASIS OF DESIGN ARMORTEX SSPR-1818
11.09	CFCI FRIDGE / FREEZER SEE ELEC/PLUMBING
12.01	48" TALL PARTIAL-HEIGHT CUBICLE WALLS WITH TRANSLUCENT GLASS UPPER DIVIDERS. BASIS OF DESIGN: KIMBALL INTERNATIONAL XSITE POWERED PANEL SYSTEM BY FURNITURE VENDOR.
22.01	EMERGENCY SHOWER & EYE WASH STATION - SEE PLUMBING
22.03	DECK-MOUNTED EMERGENCY EYE WASH STATION - SEE PLUMBING
23.01	ROOFTOP MECHANICAL UNIT. SEE MECHANICAL
26.01	DISCONNECT SWITCH. SEE ELECTRICAL

NIXA POLICE DEPARTMENT

305 N LEEANN DR
NIXA, MO 65714

INSIGHTFUL DESIGN IDeA ARCHITECTS
112 S. Main St., Nixa, MO 65714 Ph: 417-724-8553

CJD Engineering | Energy | Innovation

olsson

METTEMEYER ENGINEERING LLC

Chipdine ARCHITECTS
Architecture / Interior Design / Graphics
1401 S. Brentwood Blvd. | Suite 270 | St. Louis, Missouri 63144
314-725-5080 | ann@chipdine.com

Reissue Date

Professional of Record

STATE OF MISSOURI
NATHAN P. RAPP
NUMBER A-6000
ARCHITECT

DATE 2025-06-11

Copyright 2025 ©
These prints are the property of the architect and shall be usedonly for the project referenced above

Architect
LMH / NPR

Project #
24-003

Date
2025-06-11

Drawing Title:
ENLARGED FLOOR PLANS - AREA B

Sheet:
A102

PRINTED: 6/11/2025 11:41:50 AM

KEYNOTES - FLOOR & ROOF PLAN	
3.01	BOLLARD @ OHD, TYP. SEE DETAIL 23/A500
3.02	BOLLARD, SEE SHEET A051, TYP.
4.01	CONTRACTOR TO VERIFY STUDS ALIGN WITH CMU FURRING. SEE DETAIL 8/A500
5.01	WALL-MOUNTED METAL LADDER. SEE DETAIL 12/A510
5.02	EXPOSED STRUCTURAL STEEL COLUMN, SEE STRUCTURAL. PAINT TO MATCH CEILING. SEE FINISH SCHEDULE
5.03	GALVANIZED STEEL SHADE STRUCTURE. SEE STRUCTURAL.
5.04	EXPOSED STRUCTURAL STEEL CROSS BRACING, SEE STRUCTURAL. PAINT TO MATCH CEILING, TYP. SEE FINISH SCHEDULE
6.01	CASEWORK, COUNTERTOP, & UPPER CABINETS. SEE INTERIOR ELEVATIONS
6.02	12" DEEP CASEWORK, BUILT IN DISPLAY CASE
7.01	CRICKET - MIN 1/4" PER FOOT SLOPE
7.02	SCUPPER AND DOWNSPOUT WITH OVERFLOW
7.03	PREFIN METAL GUTTER AND DOWNSPOUT TO DAYLIGHT ON TPO ROOF. WATER FLOW SHOULD NOT EMPTY NEXT TO MECHANICAL OR ELECTRICAL EQUIPMENT, OR VENTS. ADJUST DOWNSPOUT AS NEEDED.
7.04	DOWNSPOUT NOZZLE
7.05	PRIMARY ROOF DRAIN PIPE. COLLECT BELOW GRADE. SEE CIVIL
7.06	SECONDARY OVERFLOW ROOF DRAIN PIPE - SEE PLUMBING
7.08	TRENCH DRAIN, RE: MEP
7.09	FIRE DEPARTMENT INLET CONNECTION (RE: PLUMBING)
8.01	PROVIDE TRANSPARENT BALLISTICS WINDOW FILM AT INTERIOR GLAZING IN LOCATIONS SHOWN. SEE EXTERIOR ELEVATONS FOR BALLISTICS FILM ON EXTERIOR GLAZING
8.02	PROVIDE SEMI-TRANSPARENT WINDOW FILM FOR VISUAL SCREENING AT INTERIOR OFFICE GLAZING. SEE FINISH SCHEDULE.
8.03	6' x 28' TEMPERED GLASS FITNESS MIRROR. SEE INTERIOR ELEVATIONS
8.04	ALUMINUM-FRAMED BULLET-RESISTANT (LEVEL 3 MIN) TRANSACTION WINDOW WITH TRANSCACTION TRAY. BLACK FINISH. BASIS OF DESIGN: ARMORTEX WI-TW-AL-SP
8.05	FORWARD SET GLASS @ INTERIOR ALUMINUM STOREFRONT IN LOCATIONS SHOWN TO CREATE ROOM ON MULLIONS FOR VESTIBULE PUSH BUTTONS
8.06	3'x3' ROOF HATCH WITH YELLOW SAFETY RAILS
10.01	MOVEABLE INDUSTRIAL FLOOR-MOUNTED SHELVING. OFOI

KEYNOTES - FLOOR & ROOF PLAN	
10.02	HIGH DENSITY MOBILE SHELVING UNITS - MANUAL OPERATION BY OTHERS.
10.03	BIOMETRIC PASS-TRHOUGH LOCKERS AND PACKAGE DROP BOX BY OTHERS.
10.06	PROVIDE FARADAY CAGE. SEE ALTERNATE 01 ON G001
10.07	4' x 8" GLASS DRY ERASE BOARD WITH MARKER TRAY. PROVIDED AND INSTALLED BY GC
10.08	FULL HEIGHT DEMOUNTABLE PARTITIONS. BASIS OF DESIGN: KI WALL GENIUS. SOLID WALLS ON 3 SIDES OF OFFICE AND GLASS WALL AT OFFICE FRONT (DOOR SIDE).
10.09	WRX WEAPONS STORAGE RACKS BY OTHERS.
10.10	24" W x 25" D x 7' TALL LOCKERS WITH VENTILATED BOOT BOX BY OTHERS
10.11	STORAGE CABINETS AND DESK. BY OTHERS.
10.12	STAINLESS STEEL WORK STATION BY OTHERS.
10.13	QUARTER MASTER STORAGE BY OTHERS
10.15	GUN WORK BENCH BY OTHERS
10.16	RECESSED FIREARM CABINET BY OTHERS.
10.17	30" DEEP METAL AWNING WITH INTEGRAL GUTTER & DOWNSPOUT - BASIS OF DESIGN - LAWRENCE FABRIC LFS-LFA
10.18	SEMI-RECESSED AED CABINET
10.19	SURFACE MOUNTED FIRE EXTINGUISHER CABINET WITH 10 LB ABC FIRE EXTINGUISHER
10.20	SEMI-RECESSED FIRE EXTINGUISHER CABINET AND 10LB ABC FIRE EXTINGUISHER
11.01	VENDING MACHINES (NIC)
11.02	CFCI DRYING CABINET. BASIS OF DESIGN: AIR SCIENCE SAFEKEEPER 72" FDC-010-A
11.03	TELEVISION MONITER BY GC. (SEE LV) CONTRACTOR TO PROVIDE FRT WD BLOCKING FOR TV MOUNT
11.04	TELEVISION MONITER ON SWIVEL MOUNT BY GC. (SEE LV) CONTRACTOR TO PROVIDE FRT WD BLOCKING FOR SWIVEL TV MOUNT.
11.05	CFCI MOVEABLE DUCTLESS FUME HOOD. BASIS OF DESIGN: AIR SCIENCE PS-24-XT-CART-A
11.06	CFCI DISHWASHER
11.07	CFCI UNDER COUNTER ICE MAKER
11.08	SECURE PACKAGE RECEIVER - BASIS OF DESIGN ARMORTEX SSPR-1818
11.09	CFCI FRIDGE / FREEZER SEE ELEC/PLUMBING
12.01	48" TALL PARTIAL-HEIGHT CUBICLE WALLS WITH TRANSLUCENT GLASS UPPER DIVIDERS. BASIS OF DESIGN: KIMBALL INTERNATIONAL XSITE POWERED PANEL SYSTEM BY FURNITURE VENDOR.
22.01	EMERGENCY SHOWER & EYE WASH STATION - SEE PLUMBING
22.03	DECK-MOUNTED EMERGENCY EYE WASH STATION - SEE PLUMBING
23.01	ROOFTOP MECHANICAL UNIT. SEE MECHANICAL
26.01	DISCONNECT SWITCH. SEE ELECTRICAL

GENERAL ROOF PLAN NOTES:

A. REFER TO COVER SHEET FOR GENERAL PROJECT NOTES.
B. ALL ROOF EQUIPMENT SHALL HAVE CRICKETS FOR PROPER DRAINAGE
C. ALL ROOF SURFACES TO HAVE 1/4" / FOOT SLOPE MINIMUM TO MAINTAIN DRAINAGE.

DEMO / NEW CONSTRUCTION LEGEND

- NEW CONSTRUCTION: UNRATED, PARTIAL-HEIGHT WALL TO CEILING
- NEW CONSTRUCTION: UNRATED, FULL-HEIGHT WALL TO DECK
- NEW CONSTRUCTION: 1 HOUR FIRE SEPARATION
- NEW CONSTRUCTION: 2 HOUR FIRE SEPARATION

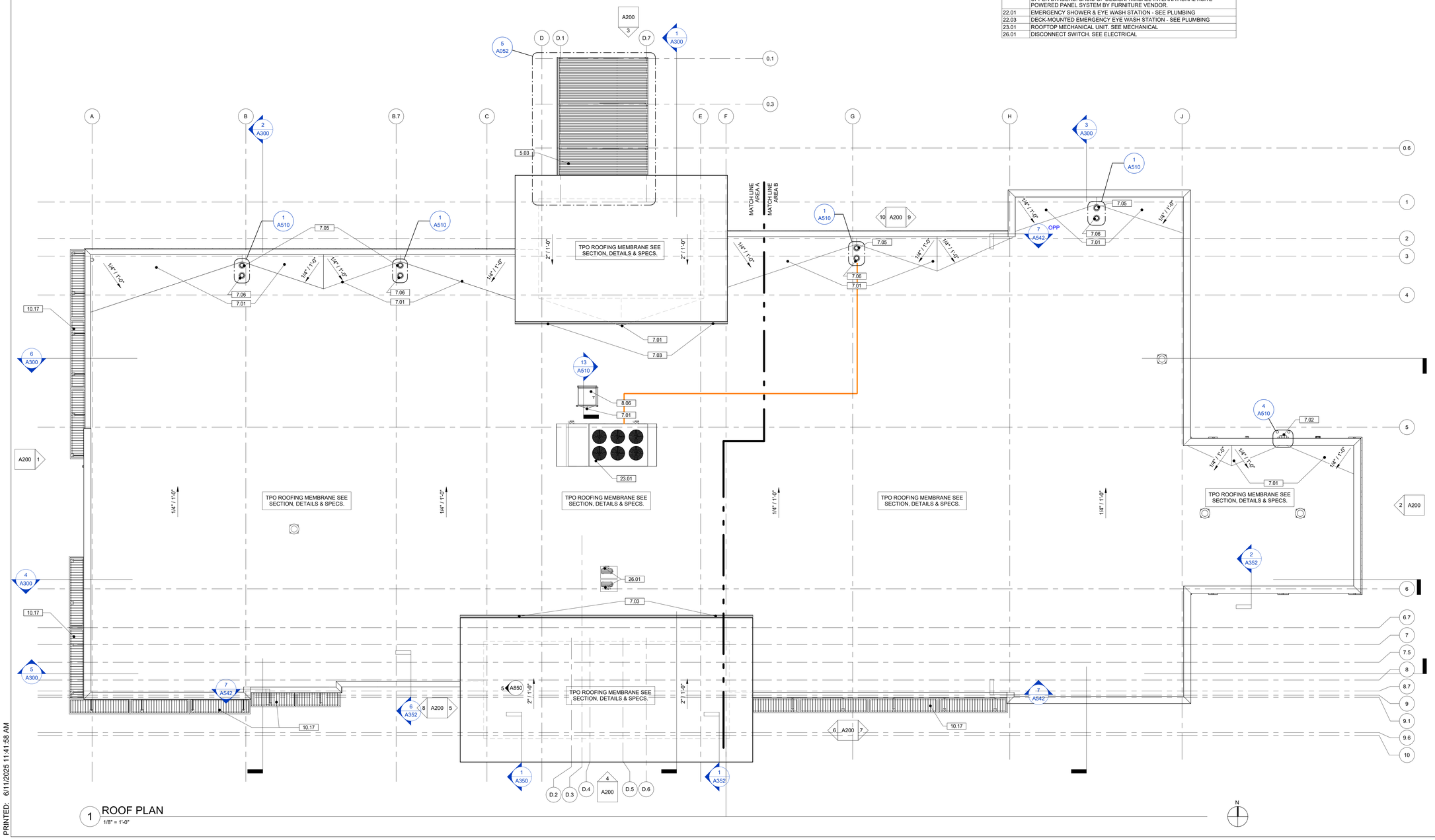

1 ROOF PLAN
1/8" = 1'-0"

PRINTED: 6/11/2025 11:41:58 AM

NIXA POLICE DEPARTMENT

305 N LEEANN DR
NIXA, MO 65714

INSIGHT DESIGN IDeA ARCHITECTS
112 S. Main St., Nixa, MO 65714 Ph: 417-724-8553

CJD Engineering | Energy | Innovation

olsson

METTEMEYER ENGINEERING LLC

Chiodini ARCHITECTS
Architecture / Interior Design / Graphics
14015 S. Bennwood Blvd. / Suite 370 / St. Louis, Missouri 63144
314-725-5888 | art@chiodini.com

Reissue Date

Professional of Record

STATE OF MISSOURI
NATHAN P. RAPP
NUMBER A-2001038751
ARCHITECT

DATE 2025-06-11

Copyright 2025 ©
These prints are the property of the architect and shall be usedonly for the project referenced above

Architect
LMH / NPR

Project #
24-003

Date
2025-06-11

Drawing Title:
ROOF PLAN

Sheet:
A110

KEYNOTES - RCP	
5.01	EXPOSED STRUCTURE. PAINT TO MATCH CEILING. SEE FINISH SCHEDULE
5.02	GALVANIZED STEEL SHADE STRUCTURE. SEE STRUCTURAL.
5.03	3'x3' ROOF HATCH WITH YELLOW SAFETY RAILS
7.02	ROOF DRAIN SEE PLUMBING/CIVIL
7.03	SCUPPER AND PRIMARY ROOF DRAIN SEE CIVIL/PLUMBING
9.01	GYP SOFFIT OR BULKHEAD. SEE ENLARGED PLANS FOR HEIGHT
10.01	30" DEEP METAL AWNING WITH INTEGRAL GUTTER & DOWNSPOUT - BASIS OF DESIGN - LAWRENCE FABRIC
11.01	TWO-SIDED CEILING-MOUNTED TV MONITOR STAND. CENTER OVER MIDDLE OF CUBICLES BELOW.
12.01	WINDOW SHADES WITH SHROUD (3% OPENNESS FACTOR) AT ALL WEST AND SOUTH EXTERIOR WINDOWS
12.02	WINDOW SHADES WITH SHROUD (5% OPENNESS FACTOR) AT ALL EAST EXTERIOR WINDOWS - WINDOWS STARTING 10' AFF TO BE MOTORIZED
12.03	WINDOW SHADES WITH SHROUD (5% OPENNESS FACTOR) ON BOTH EXTERIOR WINDOWS (118 CHIEF OFFICE)
23.01	EXPOSED HVAC DUCT & GRILLE. PAINT TO MATCH CEILING. SEE FINISH SCHEDULE
26.01	PENDANT LIGHT FIXTURE. SEE ELECTRICAL
26.02	EXTERIOR WALL SCONCE. SEE ELECTRICAL
26.03	LIGHT FIXTURE IN COVE. SEE ELECTRICAL AND A520 FOR DETAIL
26.04	OUTDOOR RATED LIGHT FIXTURE. SEE ELECTRICAL
26.05	SALLYPORT LIGHTING. SEE ELECTRICAL
27.01	AUDIO SPEAKER SYSTEM - SEE LOW VOLTAGE
28.01	CAMERA - SEE LOW VOLTAGE

SYMBOL LEGEND

- ACOUSTICAL CEILING (RE: SPEC & FINISH SCHEDULE)
- GYPSUM BOARD SOFFIT/CEILING (PAINT)
- METAL PANEL SOFFIT/CEILING (RE: SPEC & FINISH SCHEDULE)
- HVAC DIFFUSER/RETURN AIR GRILLE (RE: MECH)
- LIGHT FIXTURE (RE: ELEC)
- LIGHT FIXTURE (RE: ELEC)

FINISH SCHEDULE GUIDE

CEILINGS (RE: FINISH SCHEDULE)

ACT	ACOUSTICAL CEILING
PNT	GYPSUM BOARD - PAINT
MP	METAL PANEL
WD	WOOD CEILING
EX	EXPOSED
-	NO FINISH REQ'D / EXIST. TO REMAIN

Room name ← ROOM NAME
101 ← ROOM NUMBER
ACT-1 | 10'-0" ← CEILING HEIGHT
CEILING FINISH

DEMO / NEW CONSTRUCTION LEGEND

- NEW CONSTRUCTION: UNRATED, PARTIAL-HEIGHT WALL TO CEILING
- NEW CONSTRUCTION: UNRATED, FULL-HEIGHT WALL TO DECK
- NEW CONSTRUCTION: 1 HOUR FIRE SEPARATION
- NEW CONSTRUCTION: 2 HOUR FIRE SEPARATION

GENERAL CEILING NOTES:

A. ACOUSTIC CEILING TILE (ACT) HEIGHTS ARE TO FACE OF TILE, UNLESS NOTED OTHERWISE.
B. ALL EXPOSED METAL DECK, STEEL BAR JOISTS, BEAMS, ANGLES, CONDUITS, JUNCTION BOXES, DUCTWORK, ETC. ARE TO BE PAINTED, UNLESS NOTED OTHERWISE. SEE FINISH SCHEDULE.
C. COORDINATE REFLECTED CEILING PLAN LIGHT FIXTURE LOCATIONS WITH ELECTRICAL DRAWINGS. REPORT DISCREPANCIES AND CONFLICTS FOR ARCHITECT RESOLUTION PRIOR TO INSTALLATION.
D. LIGHT FIXTURE LOCATIONS ARE TO BE COORDINATED WITH FINAL FURNITURE PLANS. COORDINATE WITH ARCHITECT
E. SPRINKLER HEADS, SPEAKERS, SECURITY CAMERAS, AND CAN LIGHTS ARE TO BE MOUNTED IN THE CENTER OF A 2x2 ACOUSTIC CEILING TILE (ACT) OR IMPLIED 2x2 CENTER OF HALF A 2x4 TILE, UNO.

GENERAL SEISMIC LAY-IN SUSPENDED CEILING NOTES:
A. CODE REFERENCE STANDARDS: ASCE7, ASTM C636 AND ASTM E580.
B. CISCA SEISMIC CONSTRUCTION HANDBOOK FOR REFERENCE ONLY.
C. THE FOLLOWING IS A SUMMERY OF THE REQUIREMENTS OF THE REFERENCED CODE AND STANDARDS.
D. THE CONTRACTOR IS RESPONSIBLE FOR INSTALLATION IN ACCORDANCE WITH REFERENCED CODE AND STANDARDS, AND TO MAINTAIN A CODE AND STANDARDS REFERENCE ONSITE FOR REVIEW.
E. INTERNATIONAL BUILDING CODE (IBC) ALLOWS FOR THE USE OF PROPRIETARY ALTERNATES TESTED TO ESR 3336.
F. INTERNATIONAL BUILDING CODE (IBC) SEISMIC DESIGN CATEGORIES A AND B INSTALL PER ASTM C636 REQUIREMENTS.

SEISMIC DESIGN CATEGORY D, E AND F - LAY-IN CEILING
A. PROVIDE A 2" PERIMETER CLOSURE ANGLE WITH THE GRID CONNECTED TO THE ANGLE ON TWO ADJACENT SIDES AND UNATTACHED ON TWO ADJACENT SIDES. A MINIMUM CLEARANCE OF **3/4**" MUST BE MAINTAINED ON THE TWO UNATTACHED ADJACENT SIDES.
B. UNATTACHED PERIMETER RUNNER ENDS MUST BE TIED TOGETHER TO PREVENT SPREADING.
C. PERIMETER RUNNERS MUST BE SUPPORTED BY VERTICAL HANGER WIRES NOT MORE THAN 8" FROM THE WALL.
D. GRID MEMBERS MUST BE HEAVY DUTY LOAD RATING AS DEFINED IN ASTM C635.
E. GRID CONNECTIONS 180 LB. MINIMUM STRENGTH FOR MAIN RUNNER SPLICES AND CROSS RUNNER INTERSECTIONS.
F. VERTICAL SUSPENSION WIRES: NO. 12 GAGE WIRE MIN. AT 4'-0" MAX. OC EACH WAY. CONNECTIONS TO SUPPORTING STRUCTURE MUST BE CAPABLE OF CARRYING 90 LB. VERTICAL HANGER WIRES MUST BE STRAIGHT AND SHALL NOT USE BENDS OR LOCALIZED KINKS FOR LEVELING.
G. WIRES MAY NOT ATTACH TO OR BEND AROUND INTERFERING EQUIP.
H. FIELD-TIED CONNECTIONS, VERTICAL HANGER WIRES MUST BE SHARPLY BENT AND WRAPPED WITH THREE TURNS IN THREE INCHES OR LESS.
I. LATERAL FORCE BRACING: REQUIRED FOR ALL CEILINGS GREATER THAN 1000 SQUARE FEET. SHALL CONSIST OF FOR SPLAY WIRES, OR RIGID GRACING ACCOMPANIED BY A COMPRESSION POST LOCATED AT 12'-0" O. C. EACH WAY STARTING AT 6'-0" FROM TWO ADJACENT WALLS. THE BRACING CONNECTION STRENGTH SHALL BE 250LB. MIN.
J. SPRINKLER HEADS AND OTHER PENETRATIONS SHALL HAVE A MIN OF 1" CLEAR SPACE IN ALL DIRECTIONS.
K. AN ALTERNATE TO PROVIDING LARGE CLEARANCES AROUND SPRINKLER SYSTEM PENETRATIONS THROUGH CEILINGS, THE SPRINKLER SYSTEM AND CEILING GRID MAY BE TIED TOGETHER AS AN INTEGRAL UNIT. THE CEILING SHALL BE DESIGNED BY A DESIGN PROFESSIONAL AND SHALL CONSIDER THE MASS AND FLEXIBILITY OF ALL ELEMENTS; CEILING, SPRINKLER SYSTEM LIGHT FIXTURES AND MECHANICAL.
L. PARTITIONS MUST BE INDEPENDENT OF THE CEILING.
M. FOR CEILINGS GREATER THAN 2,500 SQ. FT., DIVIDE THE CEILING INTO AREAS LESS THAN OR EQUAL TO 2,500 SQ. FT. THE DIVIDED CEILING SUBSECTION MUST NOT EXCEED A RATIO OF 4:1 FOR LONG SIDE TO THE SHORT SIDE. ALLOW FOR 3/4" MOVEMENT.

SEISMIC DESIGN CATEGORY D, E AND F - LIGHT FIXTURES
A. LIGHT FIXTURES MUST BE POSITIVELY ATTACHED TO THE GRID BY AT LEAST TWO CONNECTIONS, EACH CAPABLE OF SUPPORTING THE WEIGHT OF THE FIXTURE.
B. SURFACE-MOUNTED LIGHT FIXTURES SHALL BE POSITIVELY CLAMPED TO THE GRID.
C. RIGID CONDUIT IS NOT PERMITTED FOR THE ATTACHMENT OF FIXTURES.
D. REQUIRED SUPPORT BY FIXTURE WEIGHT
   a. ≤ 10 LB MINIMUM ONE 12 GAGE HANGER WIRE CONNECTED FROM THE HOUSING TO THE STRUCTURE. WIRE MAY BE SLACK.
   b. ≤ 56 LB MINIMUM TWO 12 GAGE HANGER WIRES CONNECTED FROM THE HOUSING TO THE STRUCTURE. WIRE MAY BE SLACK.
   c. > 56 LB INDEPENDENTLY SUPPORTED FROM THE STRUCTURE BY APPROVED HANGERS.
   d. PENDANT LIGHT FIXTURES MINIMUM ONE 9 GAGE WIRE.

SEISMIC DESIGN CATEGORY D, E AND F - FLEXIBLE MOUNTED MECHANICAL DEVICES
A. REQUIRED SUPPORT BY WEIGHT
   a. ≤ 20 LB. ATTACHED TO MAIN RUNNERS OR CROSS RUNNERS WITH THE LAME LOAD CARRYING CAPACITY AS THE MAIN RUNNERS.
   b. ≤ 56 LB. AND > 20 LB. MINIMUM TWO NO. 12 GAGE HANGER WIRES. WIRES MAY BE SLACK.
   c. > 56 LB. DIRECTLY SUPPORTED FROM THE STRUCTURE.

SEISMIC DESIGN – ISLAND CEILINGS (CLOUDS)
A. THE EXCERPT BELOW FROM ASCE7-10, SECTION 13.5.1/ASTM E580 1.8 EXEMPTS CERTAIN ISLAND CEILINGS FROM COMPLIANCE WITH SEISMIC REQUIREMENTS:
EXCEPTION: COMPONENTS SUPPORTED BY CHAINS OR OTHERWISE SUSPENDED FROM THE STRUCTURE ARE NOT REQUIRED TO SATISFY THE SEISMIC FORCE AND RELATIVE DISPLACEMENT REQUIREMENTS PROVIDED THEY MEET ALL OF THE FOLLOWING CRITERIA:
   a. THE DESIGN LOAD FOR SUCH ITEMS SHALL BE EQUAL TO 1.4 TIMES THE OPERATING WEIGHT ACTING DOWN WITH A SIMULTANEOUS HORIZONTAL LOAD EQUAL TO 1.4 TIMES THE OPERATING WEIGHT. THE HORIZONTAL LOAD SHALL BE APPLIED IN THE DIRECTION THAT RESULTS IN THE MOST CRITICAL LOADING FOR DESIGN.
   b. SEISMIC INTERACTION EFFECTS SHALL BE CONSIDERED IN ACCORDANCE WITH ASCE 7-10 SECTION 12.2.3.
   c. THE CONNECTION TO THE STRUCTURE SHALL ALLOW A 360 DEGREE RANGE OF MOTION IN THE HORIZONTAL PLANE.

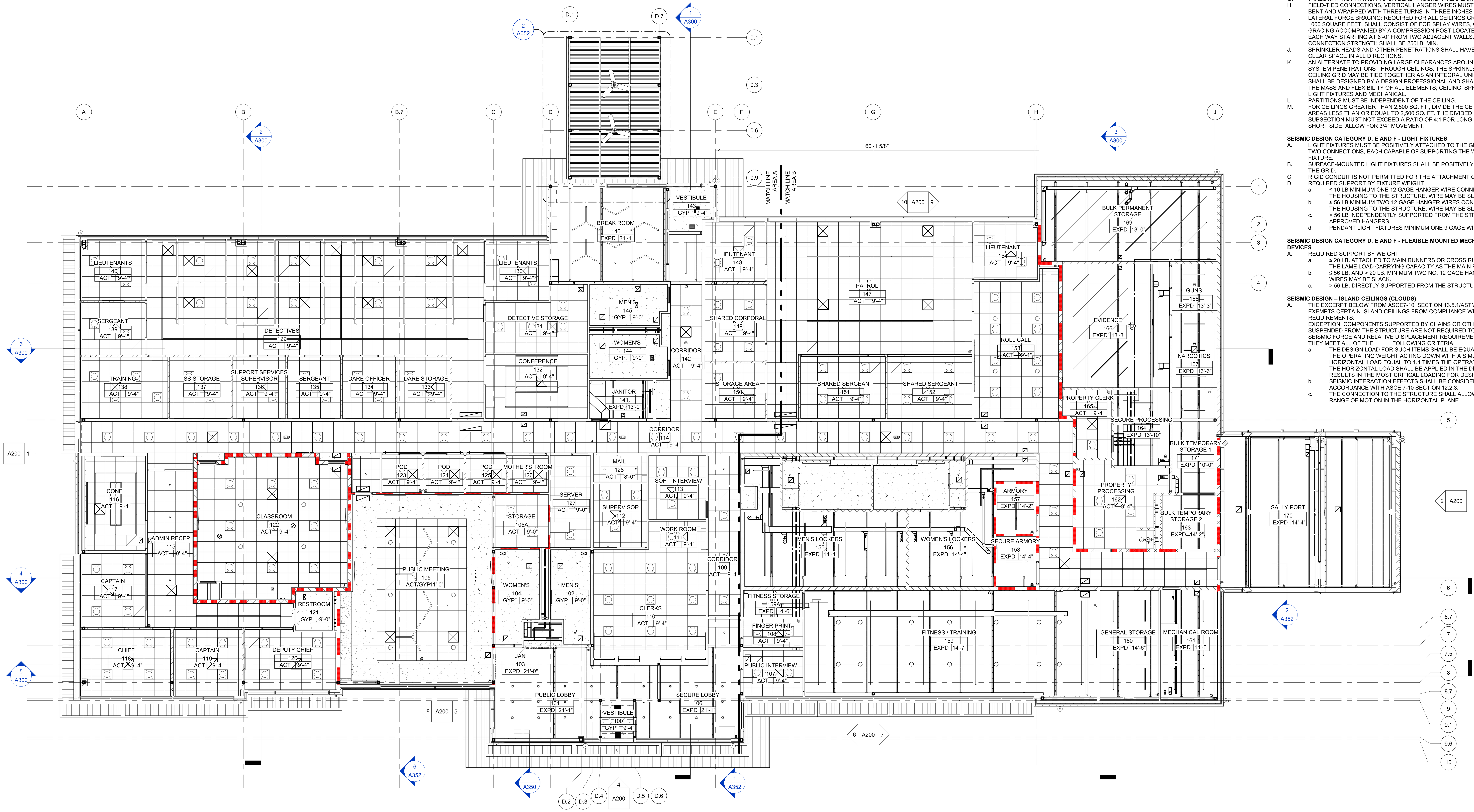

1 FIRST FLOOR REFLECTED CEILING PLAN
1/8" = 1'-0"

PRINTED: 6/11/2025 11:42:02 AM

NIXA POLICE DEPARTMENT
305 N LEEANN DR
NIXA, MO 65714

INSIGHT DESIGN IDeA ARCHITECTS
112 S. Main St., Nixa, MO 65714 Ph: 417-724-8553

CJD Engineering | Energy | Innovation

olsson

METTEMEYER ENGINEERING LLC

Chiodini ARCHITECTS
Architecture / Interior Design / Graphics
1401 S. Brentwood Blvd. / Suite 575 / St. Louis, Missouri 63144
314-725-5588 / arch@chiodini.com

Reissue Date

Professional of Record

STATE OF MISSOURI
NATHAN P. RAPP
NUMBER A-2000160201
ARCHITECT

DATE 2025-06-11

Copyright 2025 ©
These prints are the property of the architect and shall be usedonly for the project referenced above

Architect
LMH / NPR

Project #
24-003

Date
2025-06-11

Drawing Title:
REFLECTED CEILING PLAN

Sheet:
A120

KEYNOTES - RCP	
5.01	EXPOSED STRUCTURE. PAINT TO MATCH CEILING. SEE FINISH SCHEDULE
5.02	GALVANIZED STEEL SHADE STRUCTURE. SEE STRUCTURAL.
5.03	3'x3' ROOF HATCH WITH YELLOW SAFETY RAILS
7.02	ROOF DRAIN SEE PLUMBING/CIVIL
7.03	SCUPPER AND PRIMARY ROOF DRAIN SEE CIVIL/PLUMBING
9.01	GYP SOFFIT OR BULKHEAD. SEE ENLARGED PLANS FOR HEIGHT
10.01	30" DEEP METAL AWNING WITH INTEGRAL GUTTER & DOWNSPOUT - BASIS OF DESIGN - LAWRENCE FABRIC
11.01	TWO-SIDED CEILING-MOUNTED TV MONITOR STAND. CENTER OVER MIDDLE OF CUBICLES BELOW.
12.01	WINDOW SHADES WITH SHROUD (3% OPENNESS FACTOR) AT ALL WEST AND SOUTH EXTERIOR WINDOWS

KEYNOTES - RCP	
12.02	WINDOW SHADES WITH SHROUD (5% OPENNESS FACTOR) AT ALL EAST EXTERIOR WINDOWS - WINDOWS STARTING 10' AFF TO BE MOTORIZED
12.03	WINDOW SHADES WITH SHROUD (5% OPENNESS FACTOR) ON BOTH EXTERIOR WINDOWS (118 CHIEF OFFICE)
23.01	EXPOSED HVAC DUCT & GRILLE. PAINT TO MATCH CEILING. SEE FINISH SCHEDULE
26.01	PENDANT LIGHT FIXTURE. SEE ELECTRICAL
26.02	EXTERIOR WALL SCONCE. SEE ELECTRICAL
26.03	LIGHT FIXTURE IN COVE. SEE ELECTRICAL AND A520 FOR DETAIL
26.04	OUTDOOR RATED LIGHT FIXTURE. SEE ELECTRICAL
26.05	SALLYPORT LIGHTING. SEE ELECTRICAL
27.01	AUDIO SPEAKER SYSTEM - SEE LOW VOLTAGE
28.01	CAMERA - SEE LOW VOLTAGE

1 ENLARGED REFLECTED CEILING PLAN - AREA A
3/16" = 1'-0"

PRINTED: 6/11/2025 11:42:07 AM

GENERAL CEILING NOTES:

A. ACOUSTIC CEILING TILE (ACT) HEIGHTS ARE TO FACE OF TILE, UNLESS NOTED OTHERWISE.
B. ALL EXPOSED METAL DECK, STEEL BAR JOISTS, BEAMS, ANGLES, CONDUITS, JUNCTION BOXES, DUCTWORK, ETC. ARE TO BE PAINTED, UNLESS NOTED OTHERWISE. SEE FINISH SCHEDULE.
C. COORDINATE REFLECTED CEILING PLAN LIGHT FIXTURE LOCATIONS WITH ELECTRICAL DRAWINGS. REPORT DISCREPANCIES AND CONFLICTS FOR ARCHITECT RESOLUTION PRIOR TO INSTALLATION.
D. LIGHT FIXTURE LOCATIONS ARE TO BE COORDINATED WITH FINAL FURNITURE PLANS. COORDINATE WITH ARCHITECT
E. SPRINKLER HEADS, SPEAKERS, SECURITY CAMERAS, AND CAN LIGHTS ARE TO BE MOUNTED IN THE CENTER OF A 2x2 ACOUSTIC CEILING TILE (ACT) OR IMPLIED 2x2 CENTER OF HALF A 2x4 TILE, UNO.

GENERAL SEISMIC LAY-IN SUSPENDED CEILING NOTES:
A. CODE REFERENCE STANDARDS: ASCE7, ASTM C636 AND ASTM E580.
B. CISCA SEISMIC CONSTRUCTION HANDBOOK FOR REFERENCE ONLY.
C. THE FOLLOWING IS A SUMMERY OF THE REQUIREMENTS OF THE REFERENCED CODE AND STANDARDS.
D. THE CONTRACTOR IS RESPONSIBLE FOR INSTALLATION IN ACCORDANCE WITH REFERENCED CODE AND STANDARDS, AND TO MAINTAIN A CODE AND STANDARDS REFERENCE ONSITE FOR REVIEW.
E. INTERNATIONAL BUILDING CODE (IBC) ALLOWS FOR THE USE OF PROPRIETARY ALTERNATES TESTED TO ESR 3336.
F. INTERNATIONAL BUILDING CODE (IBC) SEISMIC DESIGN CATEGORIES A AND B INSTALL PER ASTM C636 REQUIREMENTS.

SEISMIC DESIGN CATEGORY D, E AND F - LAY-IN CEILING
A. PROVIDE A 2" PERIMETER CLOSURE ANGLE WITH THE GRID CONNECTED TO THE ANGLE ON TWO ADJACENT SIDES AND UNATTACHED ON TWO ADJACENT SIDES. A MINIMUM CLEARANCE OF **3/4**" MUST BE MAINTAINED ON THE TWO UNATTACHED ADJACENT SIDES.
B. UNATTACHED PERIMETER RUNNER ENDS MUST BE TIED TOGETHER TO PREVENT SPREADING.
C. PERIMETER RUNNERS MUST BE SUPPORTED BY VERTICAL HANGER WIRES NOT MORE THAN 8" FROM THE WALL.
D. GRID MEMBERS MUST BE HEAVY DUTY LOAD RATING AS DEFINED IN ASTM C635.
E. GRID CONNECTIONS 180 LB. MINIMUM STRENGTH FOR MAIN RUNNER SPLICES AND CROSS RUNNER INTERSECTIONS.
F. VERTICAL SUSPENSION WIRES: NO. 12 GAGE WIRE MIN. AT 4'-0" MAX. OC EACH WAY. CONNECTIONS TO SUPPORTING STRUCTURE MUST BE CAPABLE OF CARRYING 90 LB. VERTICAL HANGER WIRES MUST BE STRAIGHT AND SHALL NOT USE BENDS OR LOCALIZED KINKS FOR LEVELING.
G. WIRES MAY NOT ATTACH TO OR BEND AROUND INTERFERING EQUIP.
H. FIELD-TIED CONNECTIONS, VERTICAL HANGER WIRES MUST BE SHARPLY BENT AND WRAPPED WITH THREE TURNS IN THREE INCHES OR LESS.
I. LATERAL FORCE BRACING: REQUIRED FOR ALL CEILINGS GREATER THAN 1000 SQUARE FEET. SHALL CONSIST OF FOR SPLAY WIRES, OR RIGID GRACING ACCOMPANIED BY A COMPRESSION POST LOCATED AT 12'-0" O. C. EACH WAY STARTING AT 6'-0" FROM TWO ADJACENT WALLS. THE BRACING CONNECTION STRENGTH SHALL BE 250LB. MIN.
J. SPRINKLER HEADS AND OTHER PENETRATIONS SHALL HAVE A MIN OF 1" CLEAR SPACE IN ALL DIRECTIONS.
K. AN ALTERNATE TO PROVIDING LARGE CLEARANCES AROUND SPRINKLER SYSTEM PENETRATIONS THROUGH CEILINGS, THE SPRINKLER SYSTEM AND CEILING GRID MAY BE TIED TOGETHER AS AN INTEGRAL UNIT. THE CEILING SHALL BE DESIGNED BY A DESIGN PROFESSIONAL AND SHALL CONSIDER THE MASS AND FLEXIBILITY OF ALL ELEMENTS; CEILING, SPRINKLER SYSTEM LIGHT FIXTURES AND MECHANICAL.
L. PARTITIONS MUST BE INDEPENDENT OF THE CEILING.
M. FOR CEILINGS GREATER THAN 2,500 SQ. FT., DIVIDE THE CEILING INTO AREAS LESS THAN OR EQUAL TO 2,500 SQ. FT. THE DIVIDED CEILING SUBSECTION MUST NOT EXCEED A RATIO OF 4:1 FOR LONG SIDE TO THE SHORT SIDE. ALLOW FOR 3/4" MOVEMENT.

SEISMIC DESIGN CATEGORY D, E AND F - LIGHT FIXTURES
A. LIGHT FIXTURES MUST BE POSITIVELY ATTACHED TO THE GRID BY AT LEAST TWO CONNECTIONS, EACH CAPABLE OF SUPPORTING THE WEIGHT OF THE FIXTURE.
B. SURFACE-MOUNTED LIGHT FIXTURES SHALL BE POSITIVELY CLAMPED TO THE GRID.
C. RIGID CONDUIT IS NOT PERMITTED FOR THE ATTACHMENT OF FIXTURES.
D. REQUIRED SUPPORT BY FIXTURE WEIGHT
  a. ≤ 10 LB MINIMUM ONE 12 GAGE HANGER WIRE CONNECTED FROM THE HOUSING TO THE STRUCTURE. WIRE MAY BE SLACK.
  b. ≤ 56 LB MINIMUM TWO 12 GAGE HANGER WIRES CONNECTED FROM THE HOUSING TO THE STRUCTURE. WIRE MAY BE SLACK.
  c. > 56 LB INDEPENDENTLY SUPPORTED FROM THE STRUCTURE BY APPROVED HANGERS.
  d. PENDANT LIGHT FIXTURES MINIMUM ONE 9 GAGE WIRE.

SEISMIC DESIGN CATEGORY D, E AND F - FLEXIBLE MOUNTED MECHANICAL DEVICES
A. REQUIRED SUPPORT BY WEIGHT
  a. ≤ 20 LB. ATTACHED TO MAIN RUNNERS OR CROSS RUNNERS WITH THE LAME LOAD CARRYING CAPACITY AS THE MAIN RUNNERS.
  b. ≤ 56 LB. AND > 20 LB. MINIMUM TWO NO. 12 GAGE HANGER WIRES. WIRES MAY BE SLACK.
  c. > 56 LB. DIRECTLY SUPPORTED FROM THE STRUCTURE.

SEISMIC DESIGN – ISLAND CEILINGS (CLOUDS)
A. THE EXCERPT BELOW FROM ASCE7-10, SECTION 13.5.1/ASTM E580 1.8 EXEMPTS CERTAIN ISLAND CEILINGS FROM COMPLIANCE WITH SEISMIC REQUIREMENTS:
EXCEPTION: COMPONENTS SUPPORTED BY CHAINS OR OTHERWISE SUSPENDED FROM THE STRUCTURE ARE NOT REQUIRED TO SATISFY THE SEISMIC FORCE AND RELATIVE DISPLACEMENT REQUIREMENTS PROVIDED THEY MEET ALL OF THE FOLLOWING CRITERIA:
  a. THE DESIGN LOAD FOR SUCH ITEMS SHALL BE EQUAL TO 1.4 TIMES THE OPERATING WEIGHT ACTING DOWN WITH A SIMULTANEOUS HORIZONTAL LOAD EQUAL TO 1.4 TIMES THE OPERATING WEIGHT. THE HORIZONTAL LOAD SHALL BE APPLIED IN THE DIRECTION THAT RESULTS IN THE MOST CRITICAL LOADING FOR DESIGN.
  b. SEISMIC INTERACTION EFFECTS SHALL BE CONSIDERED IN ACCORDANCE WITH ASCE 7-10 SECTION 12.2.3.
  c. THE CONNECTION TO THE STRUCTURE SHALL ALLOW A 360 DEGREE RANGE OF MOTION IN THE HORIZONTAL PLANE.

SYMBOL LEGEND

- ACOUSTICAL CEILING (RE: SPEC & FINISH SCHEDULE)
- GYPSUM BOARD SOFFIT/CEILING (PAINT)
- METAL PANEL SOFFIT/CEILING (RE: SPEC & FINISH SCHEDULE)
- HVAC DIFFUSER/RETURN AIR GRILLE (RE: MECH)
- LIGHT FIXTURE (RE: ELEC)
- LIGHT FIXTURE (RE: ELEC)

FINISH SCHEDULE GUIDE

CEILINGS (RE: FINISH SCHEDULE)	
ACT	ACOUSTICAL CEILING
PNT	GYPSUM BOARD - PAINT
MP	METAL PANEL
WD	WOOD CEILING
EX	EXPOSED
-	NO FINISH REQ'D / EXIST. TO REMAIN

Room name → ROOM NAME; 101 → ROOM NUMBER; ACT-1 10'-0" → CEILING HEIGHT; CEILING FINISH

DEMO / NEW CONSTRUCTION LEGEND

- NEW CONSTRUCTION: UNRATED, PARTIAL-HEIGHT WALL TO CEILING
- NEW CONSTRUCTION: UNRATED, FULL-HEIGHT WALL TO DECK
- NEW CONSTRUCTION: 1 HOUR FIRE SEPARATION
- NEW CONSTRUCTION: 2 HOUR FIRE SEPARATION

NIXA POLICE DEPARTMENT
305 N LEEANN DR
NIXA, MO 65714

INSIGHT DESIGN iDeA ARCHITECTS
112 S. Main St., Nixa, MO 65714 Ph: 417-724-8553
CJD Engineering | Energy | Innovation
olsson
METTEMEYER ENGINEERING LLC
Chiodini ARCHITECTS
Architecture / Interior Design / Graphics
1401 S. Brentwood Blvd. / Suite 575 / St. Louis, Missouri 63144
314-725-5588 / arch@chiodini.com

Reissue Date

Professional of Record

STATE OF MISSOURI NATHAN P. RAPP NUMBER A-2008001201 ARCHITECT

DATE 2025-06-11

Copyright 2025 ©
These prints are the property of the architect and shall be usedonly for the project referenced above

Architect: LMH / NPR

Project #: 24-003

Date: 2025-06-11

Drawing Title: REFLECTED CEILING PLAN - AREA A

Sheet: A121

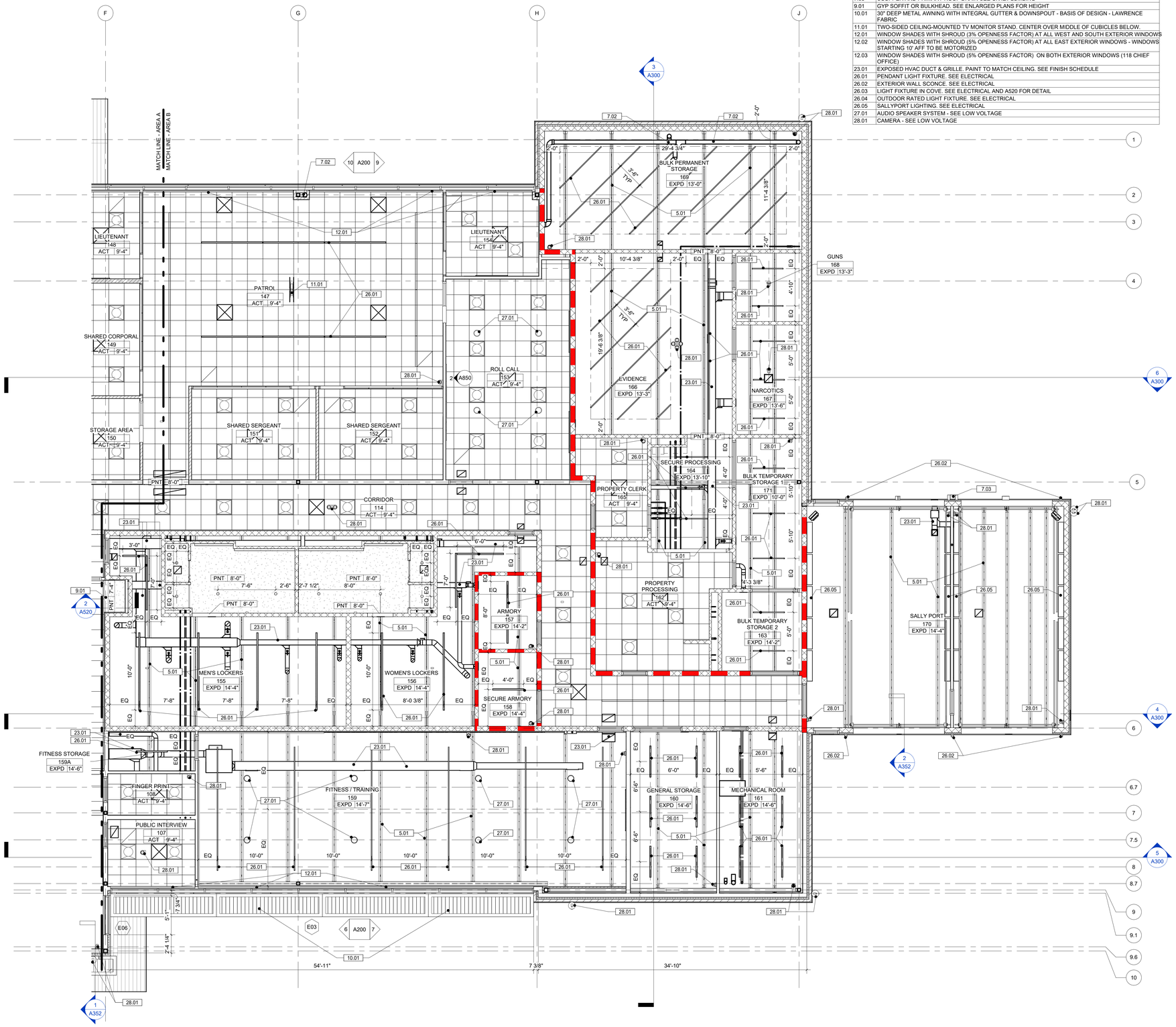

1 ENLARGED REFLECTED CEILING PLAN - AREA B
3/16" = 1'-0"

KEYNOTES - RCP	
5.01	EXPOSED STRUCTURE. PAINT TO MATCH CEILING. SEE FINISH SCHEDULE
5.02	GALVANIZED STEEL SHADE STRUCTURE. SEE STRUCTURAL.
5.03	3'x3' ROOF HATCH WITH YELLOW SAFETY RAILS
7.02	ROOF DRAIN SEE PLUMBING/CIVIL
7.03	SCUPPER AND PRIMARY ROOF DRAIN SEE CIVIL/PLUMBING
9.01	GYP SOFFIT OR BULKHEAD. SEE ENLARGED PLANS FOR HEIGHT
10.01	30" DEEP METAL AWNING WITH INTEGRAL GUTTER & DOWNSPOUT - BASIS OF DESIGN - LAWRENCE FABRIC
11.01	TWO-SIDED CEILING-MOUNTED TV MONITOR STAND. CENTER OVER MIDDLE OF CUBICLES BELOW.
12.01	WINDOW SHADES WITH SHROUD (3% OPENNESS FACTOR) AT ALL WEST AND SOUTH EXTERIOR WINDOWS
12.02	WINDOW SHADES WITH SHROUD (5% OPENNESS FACTOR) AT ALL EAST EXTERIOR WINDOWS - WINDOWS STARTING 10' AFF TO BE MOTORIZED
12.03	WINDOW SHADES WITH SHROUD (5% OPENNESS FACTOR) ON BOTH EXTERIOR WINDOWS (118 CHIEF OFFICE)
23.01	EXPOSED HVAC DUCT & GRILLE. PAINT TO MATCH CEILING. SEE FINISH SCHEDULE
26.01	PENDANT LIGHT FIXTURE. SEE ELECTRICAL
26.02	EXTERIOR WALL SCONCE. SEE ELECTRICAL
26.03	LIGHT FIXTURE IN COVE. SEE ELECTRICAL AND A520 FOR DETAIL
26.04	OUTDOOR RATED LIGHT FIXTURE. SEE ELECTRICAL
26.05	SALLYPORT LIGHTING. SEE ELECTRICAL
27.01	AUDIO SPEAKER SYSTEM - SEE LOW VOLTAGE
28.01	CAMERA - SEE LOW VOLTAGE

GENERAL CEILING NOTES:

A. ACOUSTIC CEILING TILE (ACT) HEIGHTS ARE TO FACE OF TILE, UNLESS NOTED OTHERWISE.
B. ALL EXPOSED METAL DECK, STEEL BAR JOISTS, BEAMS, ANGLES, CONDUITS, JUNCTION BOXES, DUCTWORK, ETC. ARE TO BE PAINTED, UNLESS NOTED OTHERWISE. SEE FINISH SCHEDULE
C. COORDINATE REFLECTED CEILING PLAN LIGHT FIXTURE LOCATIONS WITH ELECTRICAL DRAWINGS. REPORT DISCREPANCIES AND CONFLICTS FOR ARCHITECT RESOLUTION PRIOR TO INSTALLATION.
D. LIGHT FIXTURE LOCATIONS ARE TO BE COORDINATED WITH FINAL FURNITURE PLANS. COORDINATE WITH ARCHITECT
E. SPRINKLER HEADS, SPEAKERS, SECURITY CAMERAS, AND CAN LIGHTS ARE TO BE MOUNTED IN THE CENTER OF A 2x2 ACOUSTIC CEILING TILE (ACT) OR IMPLIED 2x2 CENTER OF HALF A 2x4 TILE, UNO.

GENERAL SEISMIC LAY-IN SUSPENDED CEILING NOTES:

A. CODE REFERENCE STANDARDS: ASCE7, ASTM C636 AND ASTM E580.
B. CISCA SEISMIC CONSTRUCTION HANDBOOK FOR REFERENCE ONLY.
C. THE FOLLOWING IS A SUMMERY OF THE REQUIREMENTS OF THE REFERENCED CODE AND STANDARDS.
D. THE CONTRACTOR IS RESPONSIBLE FOR INSTALLATION IN ACCORDANCE WITH REFERENCED CODE AND STANDARDS, AND TO MAINTAIN A CODE AND STANDARDS REFERENCE ONSITE FOR REVIEW.
E. INTERNATIONAL BUILDING CODE (IBC) ALLOWS FOR THE USE OF PROPRIETARY ALTERNATES TESTED TO ESR 3336.
F. INTERNATIONAL BUILDING CODE (IBC) SEISMIC DESIGN CATEGORIES A AND B INSTALL PER ASTM C636 REQUIREMENTS.

SEISMIC DESIGN CATEGORY D, E AND F - LAY-IN CEILING

A. PROVIDE A 2" PERIMETER CLOSURE ANGLE WITH THE GRID CONNECTED TO THE ANGLE ON TWO ADJACENT SIDES AND UNATTACHED ON TWO ADJACENT SIDES. A MINIMUM CLEARANCE OF **3/4"** MUST BE MAINTAINED ON THE TWO UNATTACHED ADJACENT SIDES.
B. UNATTACHED PERIMETER RUNNER ENDS MUST BE TIED TOGETHER TO PREVENT SPREADING.
C. PERIMETER RUNNERS MUST BE SUPPORTED BY VERTICAL HANGER WIRES NOT MORE THAN 8" FROM THE WALL.
D. GRID MEMBERS MUST BE HEAVY DUTY LOAD RATING AS DEFINED IN ASTM C635.
E. GRID CONNECTIONS 180 LB. MINIMUM STRENGTH FOR MAIN RUNNER SPLICES AND CROSS RUNNER INTERSECTIONS.
F. VERTICAL SUSPENSION WIRES: NO. 12 GAGE WIRE MIN. AT 4'-0" MAX. OC EACH WAY. CONNECTIONS TO SUPPORTING STRUCTURE MUST BE CAPABLE OF CARRYING 90 LB. VERTICAL HANGER WIRES MUST BE STRAIGHT AND SHALL NOT USE BENDS OR LOCALIZED KINKS FOR LEVELING.
G. WIRES MAY NOT ATTACH TO OR BEND AROUND INTERFERING EQUIP.
H. FIELD-TIED CONNECTIONS, VERTICAL HANGER WIRES MUST BE SHARPLY BENT AND WRAPPED WITH THREE TURNS IN THREE INCHES OR LESS.
I. LATERAL FORCE BRACING: REQUIRED FOR ALL CEILINGS GREATER THAN 1000 SQUARE FEET. SHALL CONSIST OF FOR SPLAY WIRES, OR RIGID BRACING ACCOMPANIED BY A COMPRESSION POST LOCATED AT 12'-0" O. C. EACH WAY STARTING AT 6'-0" FROM TWO ADJACENT WALLS. THE BRACING CONNECTION STRENGTH SHALL BE 250LB. MIN.
J. SPRINKLER HEADS AND OTHER PENETRATIONS SHALL HAVE A MIN OF 1" CLEAR SPACE IN ALL DIRECTIONS.
K. AN ALTERNATE TO PROVIDING LARGE CLEARANCES AROUND SPRINKLER SYSTEM PENETRATIONS THROUGH CEILINGS, THE SPRINKLER SYSTEM AND CEILING GRID MAY BE TIED TOGETHER AS AN INTEGRAL UNIT. THE CEILING SHALL BE DESIGNED BY A DESIGN PROFESSIONAL AND SHALL CONSIDER THE MASS AND FLEXIBILITY OF ALL ELEMENTS; CEILING, SPRINKLER SYSTEM LIGHT FIXTURES AND MECHANICAL.
L. PARTITIONS MUST BE INDEPENDENT OF THE CEILING.
M. FOR CEILINGS GREATER THAN 2,500 SQ. FT., DIVIDE THE CEILING INTO AREAS LESS THAN OR EQUAL TO 2,500 SQ. FT. THE DIVIDED CEILING SUBSECTION MUST NOT EXCEED A RATIO OF 4:1 FOR LONG SIDE TO THE SHORT SIDE. ALLOW FOR 3/4" MOVEMENT.

SEISMIC DESIGN CATEGORY D, E AND F - LIGHT FIXTURES

A. LIGHT FIXTURES MUST BE POSITIVELY ATTACHED TO THE GRID BY AT LEAST TWO CONNECTIONS, EACH CAPABLE OF SUPPORTING THE WEIGHT OF THE FIXTURE.
B. SURFACE-MOUNTED LIGHT FIXTURES SHALL BE POSITIVELY CLAMPED TO THE GRID.
C. RIGID CONDUIT IS NOT PERMITTED FOR THE ATTACHMENT OF FIXTURES.
D. REQUIRED SUPPORT BY FIXTURE WEIGHT
   a. ≤ 10 LB MINIMUM ONE 12 GAGE HANGER WIRE CONNECTED FROM THE HOUSING TO THE STRUCTURE. WIRE MAY BE SLACK.
   b. ≤ 56 LB MINIMUM TWO 12 GAGE HANGER WIRES CONNECTED FROM THE HOUSING TO THE STRUCTURE. WIRE MAY BE SLACK.
   c. > 56 LB INDEPENDENTLY SUPPORTED FROM THE STRUCTURE BY APPROVED HANGERS.
   d. PENDANT LIGHT FIXTURES MINIMUM ONE 9 GAGE WIRE.

SEISMIC DESIGN CATEGORY D, E AND F - FLEXIBLE MOUNTED MECHANICAL DEVICES

A. REQUIRED SUPPORT BY WEIGHT
   a. ≤ 20 LB. ATTACHED TO MAIN RUNNERS OR CROSS RUNNERS WITH THE LAME LOAD CARRYING CAPACITY AS THE MAIN RUNNERS.
   b. ≤ 56 LB. AND > 20 LB. MINIMUM TWO NO. 12 GAGE HANGER WIRES. WIRES MAY BE SLACK.
   c. > 56 LB. DIRECTLY SUPPORTED FROM THE STRUCTURE.

SEISMIC DESIGN – ISLAND CEILINGS (CLOUDS)

A. THE EXCERPT BELOW FROM ASCE7-10, SECTION 13.5.1/ASTM E580 1.8 EXEMPTS CERTAIN ISLAND CEILINGS FROM COMPLIANCE WITH SEISMIC REQUIREMENTS:
   EXCEPTION: COMPONENTS SUPPORTED BY CHAINS OR OTHERWISE SUSPENDED FROM THE STRUCTURE ARE NOT REQUIRED TO SATISFY THE SEISMIC FORCE AND RELATIVE DISPLACEMENT REQUIREMENTS PROVIDED THEY MEET ALL OF THE FOLLOWING CRITERIA:
   a. THE DESIGN LOAD FOR SUCH ITEMS SHALL BE EQUAL TO 1.4 TIMES THE OPERATING WEIGHT ACTING DOWN WITH A SIMULTANEOUS HORIZONTAL LOAD EQUAL TO 1.4 TIMES THE OPERATING WEIGHT. THE HORIZONTAL LOAD SHALL BE APPLIED IN THE DIRECTION THAT RESULTS IN THE MOST CRITICAL LOADING FOR DESIGN.
   b. SEISMIC INTERACTION EFFECTS SHALL BE CONSIDERED IN ACCORDANCE WITH ASCE 7-10 SECTION 12.2.3.
   c. THE CONNECTION TO THE STRUCTURE SHALL ALLOW A 360 DEGREE RANGE OF MOTION IN THE HORIZONTAL PLANE.

SYMBOL LEGEND

- ACOUSTICAL CEILING (RE: SPEC & FINISH SCHEDULE)
- GYPSUM BOARD SOFFIT/CEILING (PAINT)
- METAL PANEL SOFFIT/CEILING (RE: SPEC & FINISH SCHEDULE)
- HVAC DIFFUSER/RETURN AIR GRILLE (RE: MECH)
- LIGHT FIXTURE (RE: ELEC)
- LIGHT FIXTURE (RE: ELEC)

FINISH SCHEDULE GUIDE

CEILINGS (RE: FINISH SCHEDULE)

ACT	ACOUSTICAL CEILING
PNT	GYPSUM BOARD - PAINT
MP	METAL PANEL
WD	WOOD CEILING
EX	EXPOSED
-	NO FINISH REQ'D / EXIST. TO REMAIN

Room name — ROOM NAME
101 — ROOM NUMBER
ACT-1 10'-0" — CEILING HEIGHT
CEILING FINISH

DEMO / NEW CONSTRUCTION LEGEND

- NEW CONSTRUCTION: UNRATED, PARTIAL-HEIGHT WALL TO CEILING
- NEW CONSTRUCTION: UNRATED, FULL-HEIGHT WALL TO DECK
- NEW CONSTRUCTION: 1 HOUR FIRE SEPARATION
- NEW CONSTRUCTION: 2 HOUR FIRE SEPARATION

NIXA POLICE DEPARTMENT

305 N LEEANN DR
NIXA, MO 65714

INSIGHT DESIGN IDeA ARCHITECTS
112 S. Main St., Nixa, MO 65714 Ph: 417-724-8553

CJD Engineering | Energy | Innovation

olsson

METTEMEYER ENGINEERING LLC

Chiodini ARCHITECTS
Architecture / Interior Design / Graphics
1401 S. Brentwood Blvd. | Suite 570 | St. Louis, Missouri 63144
314-725-0888 | ari@chiodini.com

Reissue Date

Professional of Record

STATE OF MISSOURI — NATHAN P. RAPP — NUMBER A-2001038751 — ARCHITECT

DATE 2025-06-11

Copyright 2025 ©

These prints are the property of the architect and shall be usedonly for the project referenced above

Architect
LMH / NPR

Project #
24-003

Date
2025-06-11

Drawing Title:
REFLECTED CEILING PLAN - AREA B

Sheet:
A122

PRINTED: 6/11/2025 11:42:11 AM

RESTROOM ACCESSORIES SCHEDULE

NO.	DESCRIPTION	MOUNTING HEIGHT	WIDTH	HEIGHT	DEPTH	MANUFACTURER	MODEL	COMMENTS
A	18" HORIZONTAL GRAB BAR	36" TO TOP OF HORIZONTAL GRAB BAR	18"	-	1 1/2" DIA	BOBRICK	B-6806 x 18	
B	36" HORIZONTAL GRAB BAR	36" TO TOP OF HORIZONTAL GRAB BAR	36"	-	1 1/2" DIA	BOBRICK	B-6806 x 36	
C	42" HORIZONTAL GRAB BAR	36" TO TOP OF HORIZONTAL GRAB BAR	42"	-	1 1/2" DIA	BOBRICK	B-6806 x 42	
D	48" HORIZONTAL GRAB BAR	36" TO TOP OF HORIZONTAL GRAB BAR	48"	-	1 1/2" DIA	BOBRICK	B-6806 x 48	
E	18" VERTICAL GRAB BAR	39" TO BOTTOM FLANGE	-	18"	1 1/2" DIA	BOBRICK	B-6806 x 18	
F	SOAP DISPENSER - LAVATORY MOUNTED	MOUNTED TO COUNTERTOP	4 1/4"	3"	6 1/2"	BOBRICK	B-865	34 FL OZ CAPACITY
G	SANITARY NAPKIN DISPOSAL	28" T.O. LID	7 1/2"	10"	3 13/16"	BOBRICK	B-270	
H	TOILET PAPER HOLDER	22" T.O. SHELF	10.56"	6.89."	6.75"	CINTAS	27081	
J	BABY CHANGING STATION	22 31/32" TO BOTTOM OF UNIT	43 3/4"	28 5/8"	6 5/8"	KOALA KARE	KB310-SSWM	
K	MOP / BROOM RACK WITH SHELF	61" T.O. SHELF	34"	13"	8"	BOBRICK	B-239 x 34	
L	COAT HOOK	48" T.O. HOOK	1 1/2"	1 5/16"	3"	BOBRICK	B-9542	
M	AUTOMATIC SOAP DISPENSER	49" T. O. UNIT	4.13"	10.56"	4.75"	CINTAS	27055	
N	MIRROR	40" B.O. REFLECTING SURFACE	24"	36"	1/2"	BOBRICK	B-1658-2436	
O	BACKLIT MIRROR	40" B.O. REFLECTING SURFACE	24"	36"	1/2"	BOBRICK	B-164 2436	PROVIDE ELECTRIC
P	AUTOMATIC PAPER TOWEL DISPENSER	51" T.O. UNIT	12.87"	16.38"	9.83"	CINTAS	20008	COLOR: BLACK
Q	SHOWER SEAT	18" T.O. SEAT WHEN FOLDED DOWN	22"	13 3/4"	15 13/16"	BOBRICK	B-5192	
R	WALL SHELF	48" T.O. SHELF	26"	2"	5 3/4"	BOBRICK	B-683	
S	CURTAIN ROD	78" T.O. BAR	36"	2 9/16"	2 9/16"	BOBRICK	B-6047x36	
T	RECESSED WALL MOUNTED WASTE RECEPTACLE	45" T.O. UNIT	4 15/16"	27 3/4"	4 15/16"	BOBRICK	B-43644	

RESTROOM ACCESSORIES

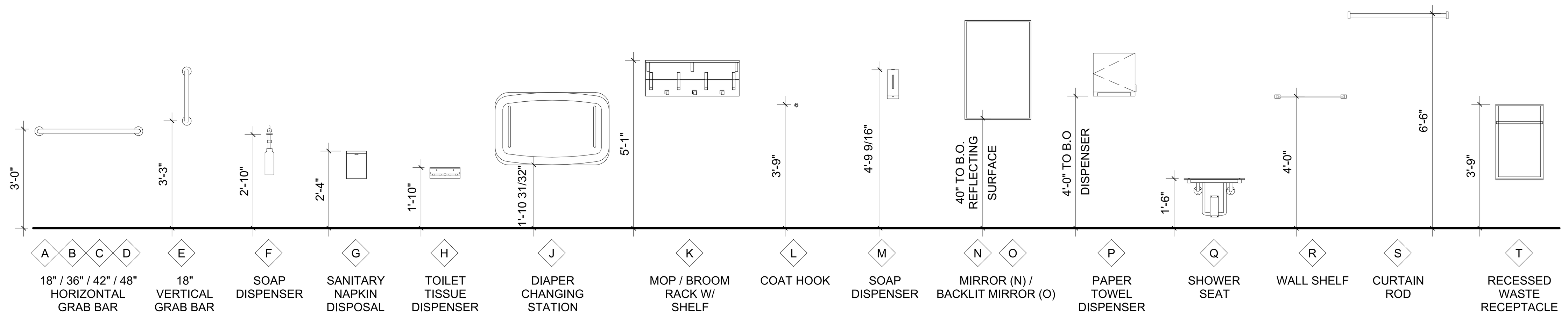

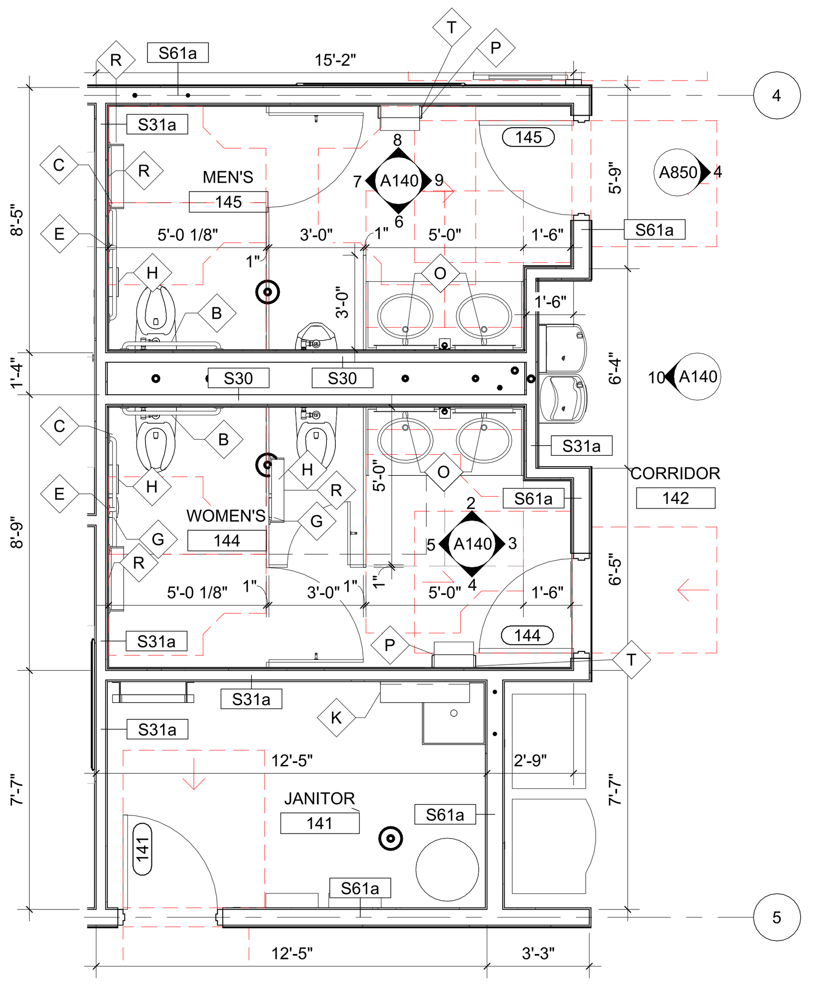

1 144 WOMEN/145 MEN ENLARGED RESTROOM FLOOR PLAN
1/4" = 1'-0"

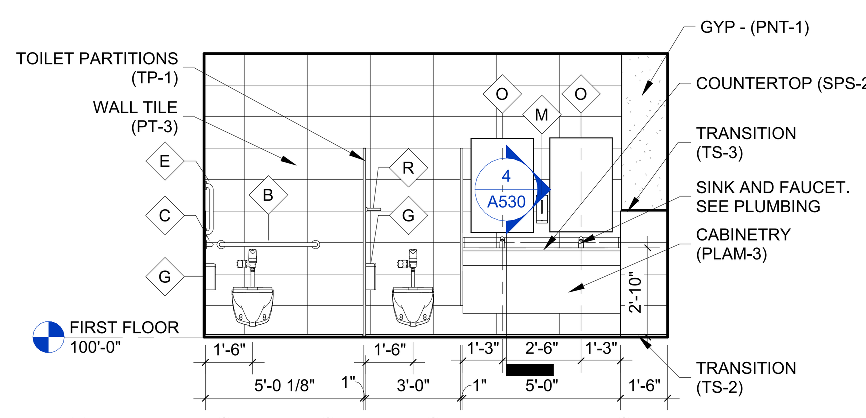

2 144 WOMEN'S - WEST ELEVATION
1/4" = 1'-0"

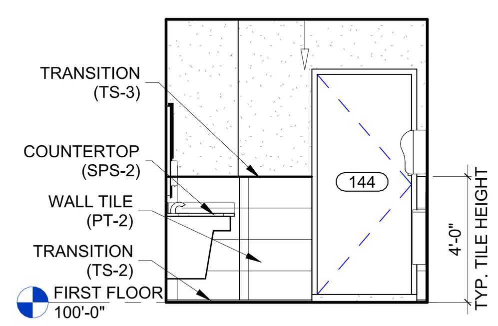

3 144 WOMEN'S NORTH ELEVATION
1/4" = 1'-0"

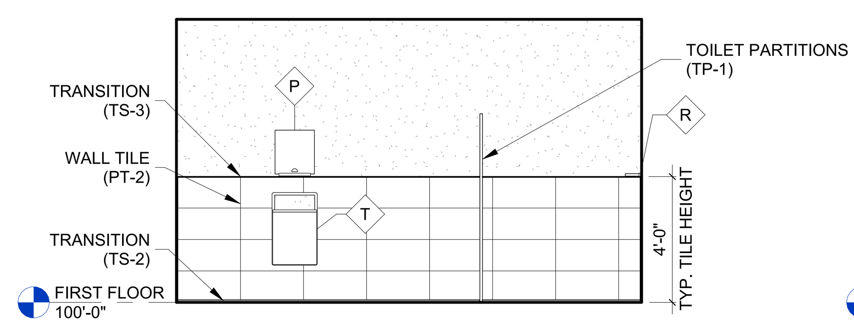

4 144 WOMEN'S - EAST ELEVATION
1/4" = 1'-0"

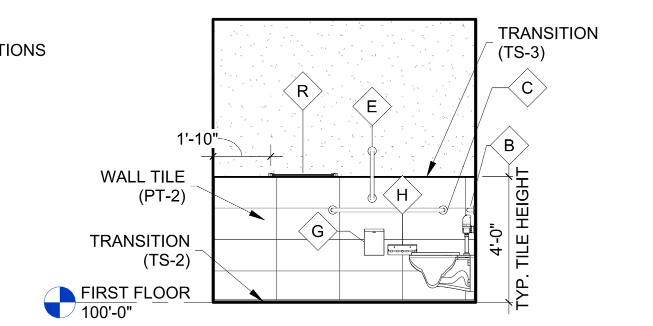

5 144 WOMEN'S - SOUTH ELEVATION
1/4" = 1'-0"

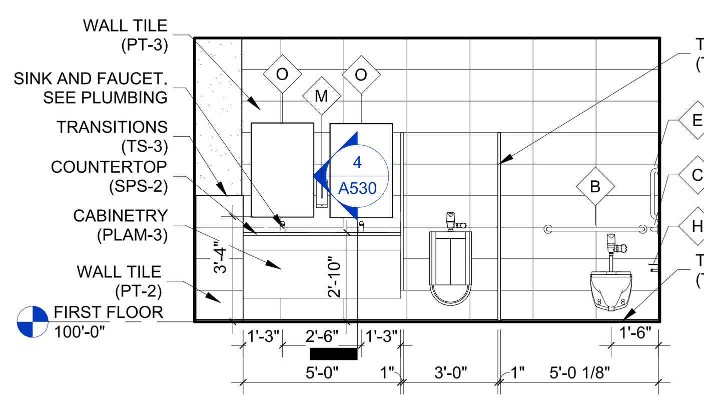

6 145 MEN'S - EAST ELEVATION
1/4" = 1'-0"

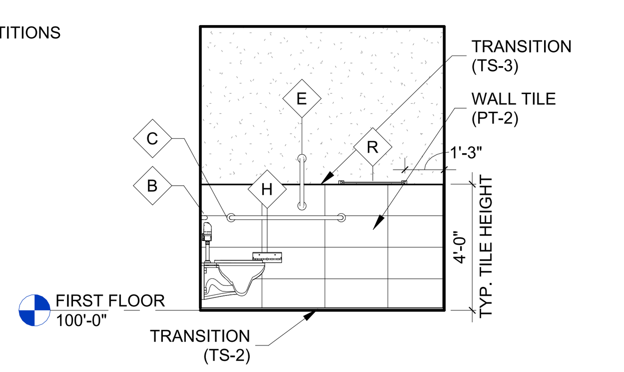

7 145 MEN'S - SOUTH ELEVATION
1/4" = 1'-0"

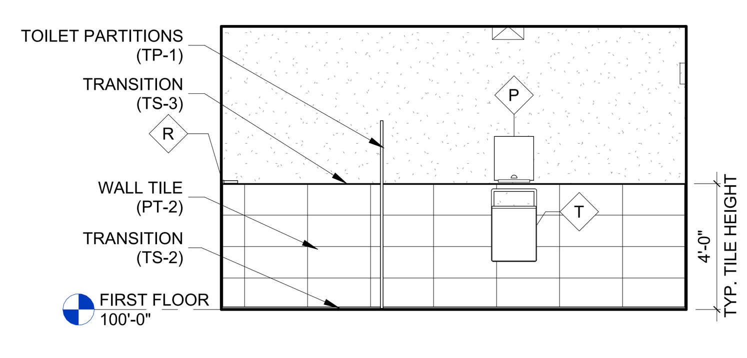

8 145 MEN'S - WEST ELEVATION
1/4" = 1'-0"

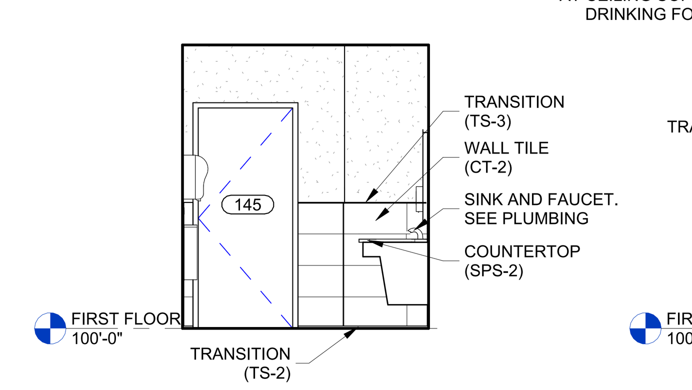

9 145 MEN'S - NORTH ELEVATION
1/4" = 1'-0"

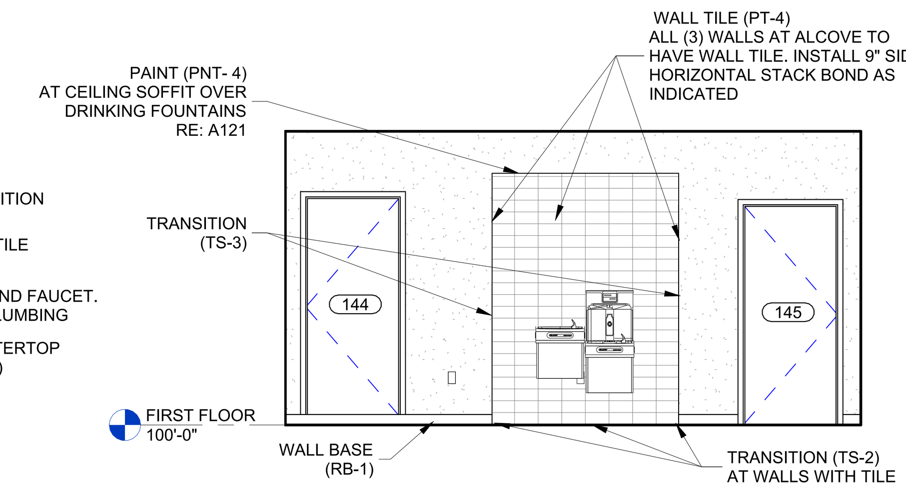

10 142 CORRIDOR - SOUTH ELEVATION
1/4" = 1'-0"

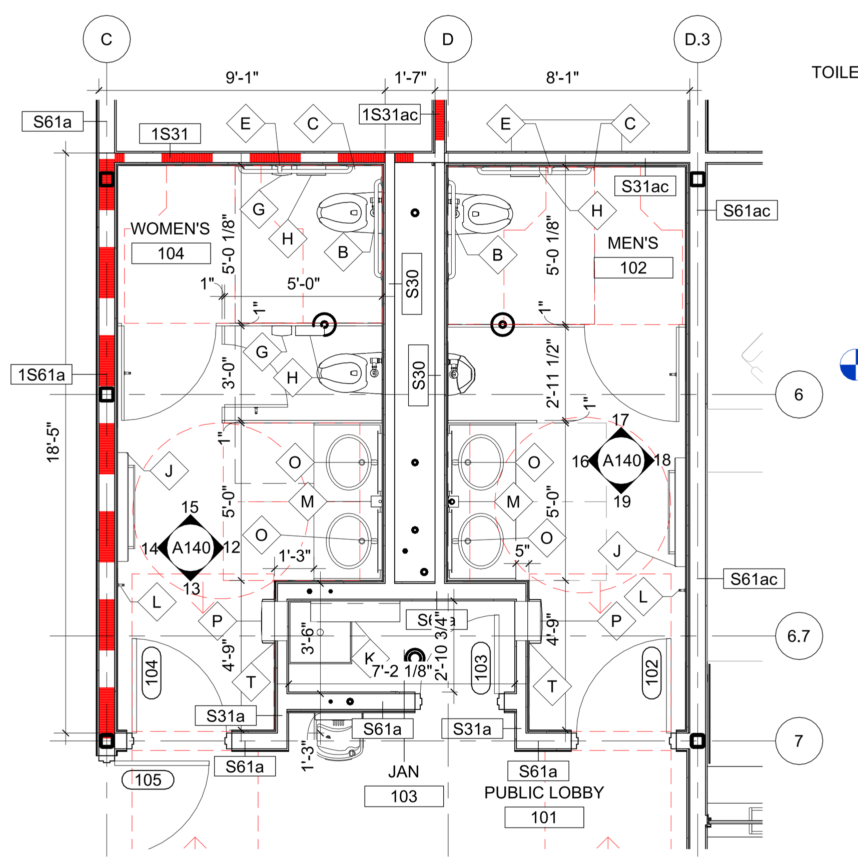

11 102 MEN/104 WOMEN ENLARGED RESTROOM FLOOR PLAN
1/4" = 1'-0"

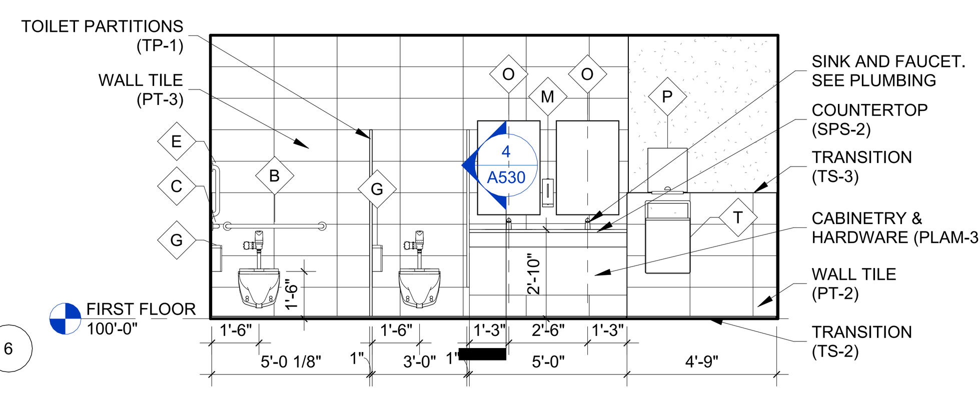

12 104 WOMEN'S - NORTH ELEVATION
1/4" = 1'-0"

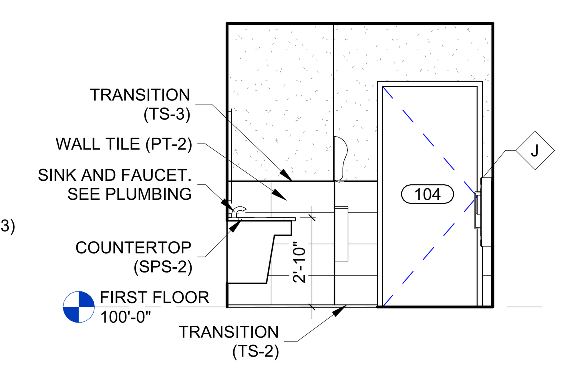

13 104 WOMEN'S - EAST ELEVATION
1/4" = 1'-0"

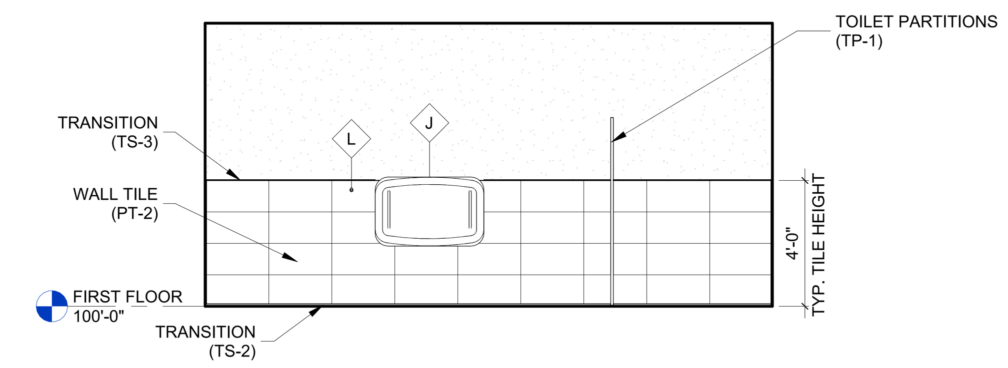

14 104 WOMEN'S - SOUTH ELEVATION
1/4" = 1'-0"

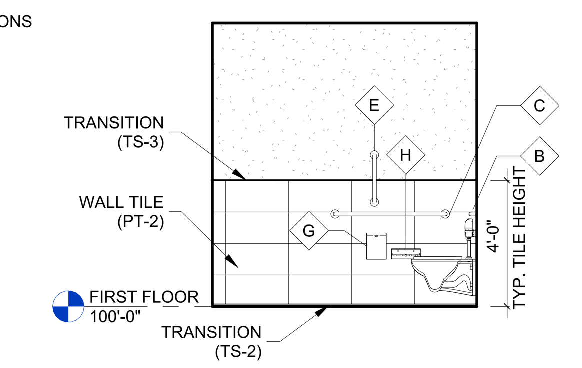

15 104 WOMEN'S - WEST ELEVATION
1/4" = 1'-0"

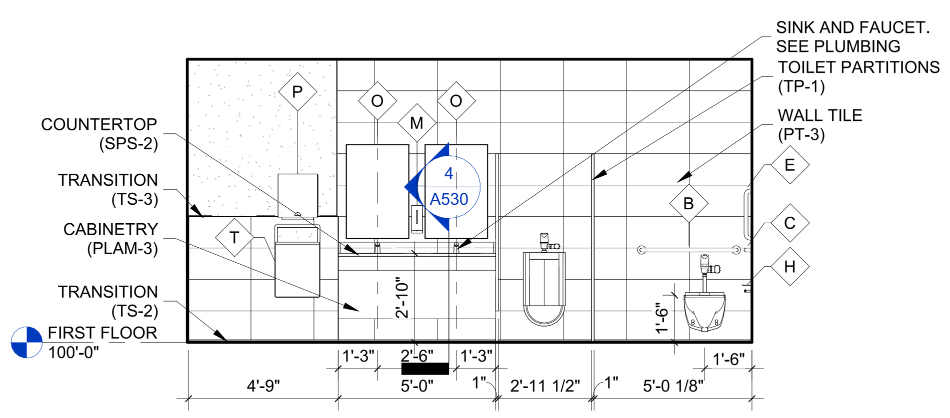

16 102 MEN'S - SOUTH ELEVATION
1/4" = 1'-0"

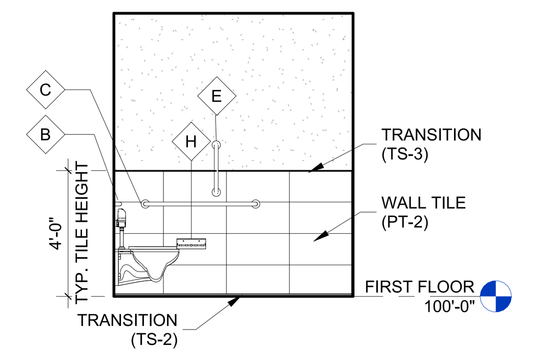

17 102 MEN'S - WEST ELEVATION
1/4" = 1'-0"

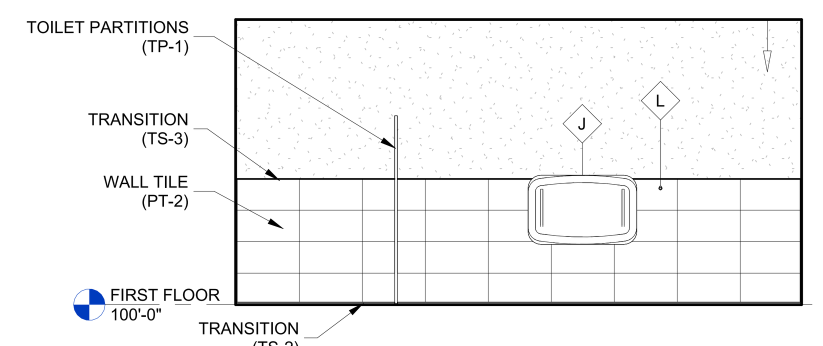

18 102 MEN'S - NORTH ELEVATION
1/4" = 1'-0"

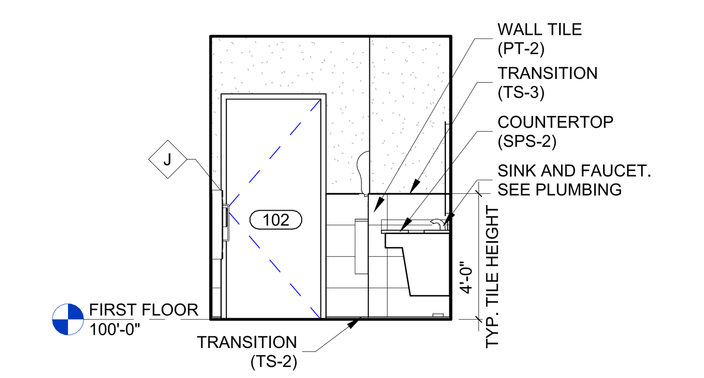

19 102 MEN'S - EAST ELEVATION
1/4" = 1'-0"

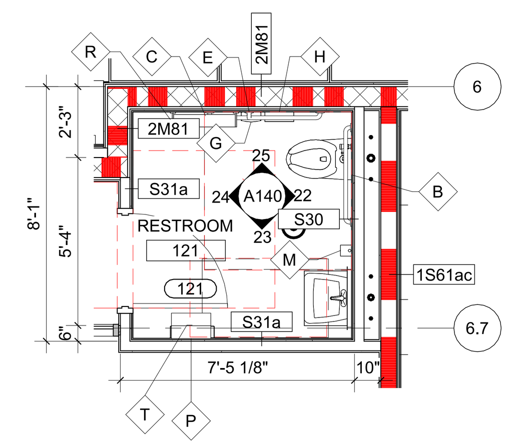

21 121 RESTROOM ENLARGED FLOOR PLAN
1/4" = 1'-0"

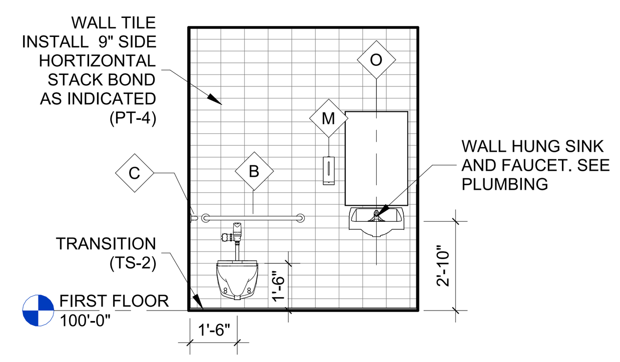

22 121 RESTROOM - NORTH ELEV
1/4" = 1'-0"

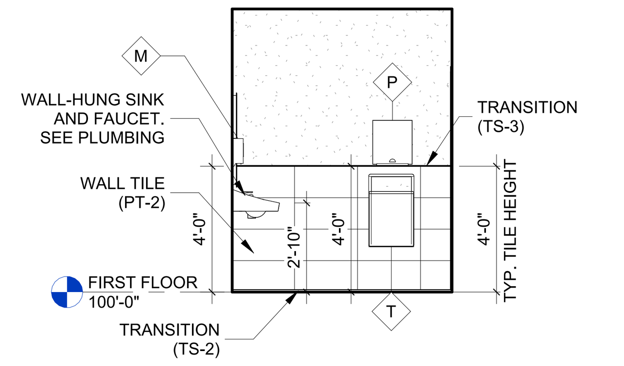

23 121 RESTROOM - EAST ELEV
1/4" = 1'-0"

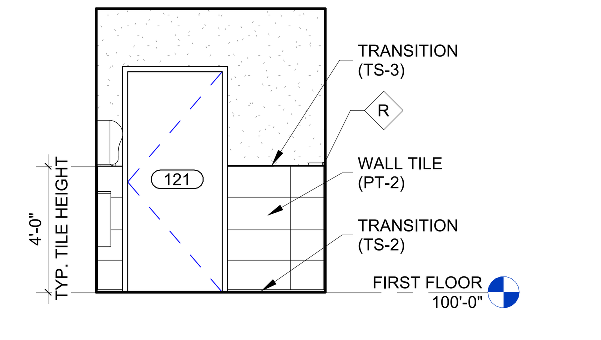

24 121 RESTROOM - SOUTH ELEV
1/4" = 1'-0"

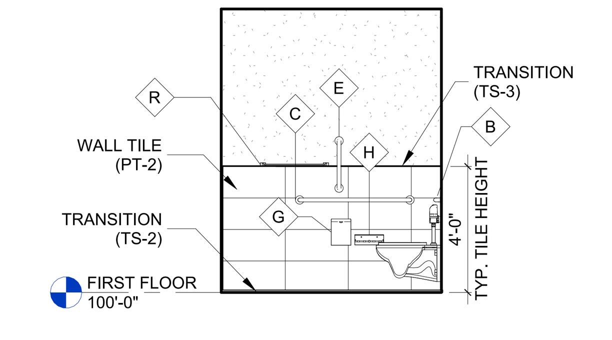

25 121 RESTROOM - WEST ELEV
1/4" = 1'-0"

GENERAL FLOOR PLAN NOTES:

A. REFER TO COVER SHEET FOR GENERAL PROJECT NOTES.
B. EGRESS DOORS SHALL NOT LOCK AGAINST THE DIRECTION OF EGRESS TRAVEL AT ANY TIME.
C. INTERIOR DIMENSIONS ARE GIVEN TO THE FINISHED FACE OF STEEL STUD OR CMU, UNLESS NOTED OTHERWISE.
D. ALL ROUGH OPENINGS FOR DOORS TO BE INSTALLED 4" FROM CLOSEST PARTITION UNLESS OTHERWISE NOTED.
E. PROVIDE CONTROL JOINTS IN GYPSUM BOARD AT SPACING NOT EXCEEDING 30'-0" OC, HORIZONTAL OR VERTICAL, AT ALL RUNS OF WALL OR SOFFIT. CONTROL JOINTS SHALL CONSIST OF DOUBLE STUDS OR DOUBLE FURRING CHANNELS PROVIDED BY CONTRACTOR. IN FIRE RATED PARTITIONS, PROVIDE FIRE RATED CONTROL JOINTS. DO NOT ALLOW BRACING TO SPAN ACROSS CONTROL JOINTS.
F. REFER TO PLAN FOR FIRE EXTINGUISHER CABINET (FEC) LOCATIONS. VERIFY SIZE AND CONFIGURATION WITH PROJECT MANUAL AND LIFE SAFETY SHEET PRIOR TO INSTALLATION. **OWNER SHALL PROVIDE ADDITIONAL FIRE EXTINGUISHER CABINETS (FEC) IF REQUESTED BY FIRE MARSHAL DURING INSPECTION OR WALK THROUGH, TO BE INSTALLED BY CONTRACTOR. COORDINATE ALL LOCATIONS WITH ARCHITECT PRIOR TO INSTALLATION.**
G. FURNITURE SHOWN IN HALFTONE ON PLAN

GENERAL INTERIOR ELEVATION NOTES:

A. PROVIDE FIRE RETARDANT TREATED WOOD BLOCKING IN WALLS AT CASEWORK, COUNTERTOPS, SHELVING, MONITOR BRACKETS, WALL MOUNTED EQUIPMENT, ETC.
B. COORDINATE PLASTIC LAMINATE, SOLID POLYMER, QUARTZ SURFACE, ETC SURFACE PATTERN/GRAIN TO RUN IN THE SAME DIRECTION AT CORNERS AND RETURNS. COORDINATE 3-SIDED CORNERS WITH ARCHITECT FOR PATTERN DIRECTION.

RESTROOM ACCESSORIES SCHEDULE NOTES

A. CONTRACTOR RESPONSIBLE FOR PROVIDING ALL FIRE-RETARDANT WOOD BLOCKING AS REQUIRED FOR PROPER INSTALLATION OF ACCESSORIES, INCLUDING OWNER PROVIDED ITEMS.
B. ALL ACCESSORIES TO BE INSTALLED PER ADA REQUIREMENTS.
C. MODEL NUMBERS SHOWN FOR DESIGN INTENT. SEE APPROVED EQUALS.

NIXA POLICE DEPARTMENT

305 N LEEANN DR
NIXA, MO 65714

INSIGHT DESIGN iDeA ARCHITECTS
112 S. Main St., Nixa, MO 65714 Ph: 417-724-8553

CJD Engineering | Energy | Innovation

olsson

METTEMEYER ENGINEERING LLC

Chiodini ARCHITECTS
Architecture / Interior Design / Graphics
1401 S. Brentwood Blvd. / Suite 575 / St. Louis, Missouri 63144
314-725-5588 / arch@chiodini.com

Reissue Date

Professional of Record

STATE OF MISSOURI
NATHAN P. RAPP
NUMBER A-2008001201
ARCHITECT

DATE 2025-06-11

Copyright 2025 ©
These prints are the property of the architect and shall be usedonly for the project referenced above

Architect
KM / NPR

Project #
24-003

Date
2025-06-11

Drawing Title:
ENLARGED RESTROOM PLANS

Sheet:
A140

PRINTED: 6/11/2025 11:42:26 AM

RESTROOM ACCESSORIES SCHEDULE

NO.	DESCRIPTION	MOUNTING HEIGHT	WIDTH	HEIGHT	DEPTH	MANUFACTURER	MODEL	COMMENTS
A	18" HORIZONTAL GRAB BAR	36" TO TOP OF HORIZONTAL GRAB BAR	18"	-	1 1/2" DIA	BOBRICK	B-6806 x 18	
B	36" HORIZONTAL GRAB BAR	36" TO TOP OF HORIZONTAL GRAB BAR	36"	-	1 1/2" DIA	BOBRICK	B-6806 x 36	
C	42" HORIZONTAL GRAB BAR	36" TO TOP OF HORIZONTAL GRAB BAR	42"	-	1 1/2" DIA	BOBRICK	B-6806 x 42	
D	48" HORIZONTAL GRAB BAR	36" TO TOP OF HORIZONTAL GRAB BAR	48"	-	1 1/2" DIA	BOBRICK	B-6806 x 48	
E	18" VERTICAL GRAB BAR	39" TO BOTTOM FLANGE	-	18"	1 1/2" DIA	BOBRICK	B-6806 x 18	
F	SOAP DISPENSER - LAVATORY MOUNTED	MOUNTED TO COUNTERTOP	4 1/4"	3"	6 1/2"	BOBRICK	B-865	34 FL OZ CAPACITY
G	SANITARY NAPKIN DISPOSAL	28" T.O. LID	7 1/2"	10"	3 13/16"	BOBRICK	B-270	
H	TOILET PAPER HOLDER	22" T.O. SHELF	10.56"	6.89"	6.75"	CINTAS	27081	
J	BABY CHANGING STATION	22 31/32" TO BOTTOM OF UNIT	43 3/4"	28 5/8"	6 5/8"	KOALA KARE	KB310-SSWM	
K	MOP / BROOM RACK WITH SHELF	61" T.O. SHELF	34"	13"	8"	BOBRICK	B-239 x 34	
L	COAT HOOK	48" T.O. HOOK	1 1/2"	1 5/16"	3"	BOBRICK	B-9542	
M	AUTOMATIC SOAP DISPENSER	49" T. O. UNIT	4.13"	10.56"	4.75"	CINTAS	27055	
N	MIRROR	40" B.O. REFLECTING SURFACE	24"	36"	1/2"	BOBRICK	B-1658-2436	
O	BACKLIT MIRROR	40" B.O. REFLECTING SURFACE	24"	36"	1/2"	BOBRICK	B-164 2436	PROVIDE ELECTRIC
P	AUTOMATIC PAPER TOWEL DISPENSER	51" T.O. UNIT	12.87"	16.38"	9.83"	CINTAS	20008	COLOR: BLACK
Q	SHOWER SEAT	18" T.O. SEAT WHEN FOLDED DOWN	22"	13 3/4"	15 13/16"	BOBRICK	B-5192	
R	WALL SHELF	48" T.O. SHELF	26"	2"	5 3/4"	BOBRICK	B-683	
S	CURTAIN ROD	78" T.O. BAR	36"	2 9/16"	2 9/16"	BOBRICK	B-6047x36	
T	RECESSED WALL MOUNTED WASTE RECEPTACLE	45" T.O. UNIT	4 15/16"	27 3/4"	4 15/16"	BOBRICK	B-43644	

RESTROOM ACCESSORIES

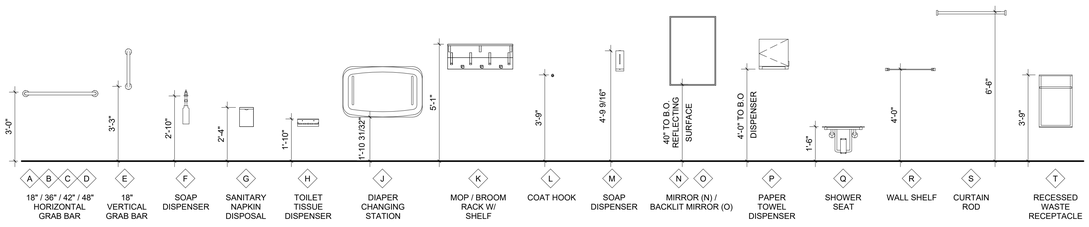

GENERAL FLOOR PLAN NOTES:

A. REFER TO COVER SHEET FOR GENERAL PROJECT NOTES.
B. EGRESS DOORS SHALL NOT LOCK AGAINST THE DIRECTION OF EGRESS TRAVEL AT ANY TIME.
C. INTERIOR DIMENSIONS ARE GIVEN TO THE FINISHED FACE OF STEEL STUD OR CMU, UNLESS NOTED OTHERWISE.
D. ALL ROUGH OPENINGS FOR DOORS TO BE INSTALLED 4" FROM CLOSEST PARTITION UNLESS OTHERWISE NOTED.
E. PROVIDE CONTROL JOINTS IN GYPSUM BOARD AT SPACING NOT EXCEEDING 30'-0" OC, HORIZONTAL OR VERTICAL, AT ALL RUNS OF WALL OR SOFFIT. CONTROL JOINTS SHALL CONSIST OF DOUBLE STUDS OR DOUBLE FURRING CHANNELS PROVIDED BY CONTRACTOR. IN FIRE RATED PARTITIONS, PROVIDE FIRE RATED CONTROL JOINTS. DO NOT ALLOW BRACING TO SPAN ACROSS CONTROL JOINTS.
F. REFER TO PLAN FOR FIRE EXTINGUISHER CABINET (FEC) LOCATIONS. VERIFY SIZE AND CONFIGURATION WITH PROJECT MANUAL AND LIFE SAFETY SHEET PRIOR TO INSTALLATION. **OWNER SHALL PROVIDE ADDITIONAL FIRE EXTINGUISHER CABINETS (FEC) IF REQUESTED BY FIRE MARSHAL DURING INSPECTION OR WALK THROUGH, TO BE INSTALLED BY CONTRACTOR. COORDINATE ALL LOCATIONS WITH ARCHITECT PRIOR TO INSTALLATION.**
G. FURNITURE SHOWN IN HALFTONE ON PLAN

GENERAL INTERIOR ELEVATION NOTES:

A. PROVIDE FIRE RETARDANT TREATED WOOD BLOCKING IN WALLS AT CASEWORK, COUNTERTOPS, SHELVING, MONITOR BRACKETS, WALL MOUNTED EQUIPMENT, ETC.
B. COORDINATE PLASTIC LAMINATE, SOLID POLYMER, QUARTZ SURFACE, ETC SURFACE PATTERN/GRAIN TO RUN IN THE SAME DIRECTION AT CORNERS AND RETURNS. COORDINATE 3-SIDED CORNERS WITH ARCHITECT FOR PATTERN DIRECTION.

RESTROOM ACCESSORIES SCHEDULE NOTES

A. CONTRACTOR RESPONSIBLE FOR PROVIDING ALL FIRE-RETARDANT WOOD BLOCKING AS REQUIRED FOR PROPER INSTALLATION OF ACCESSORIES, INCLUDING OWNER PROVIDED ITEMS.
B. ALL ACCESSORIES TO BE INSTALLED PER ADA REQUIREMENTS.
C. MODEL NUMBERS SHOWN FOR DESIGN INTENT. SEE APPROVED EQUALS.

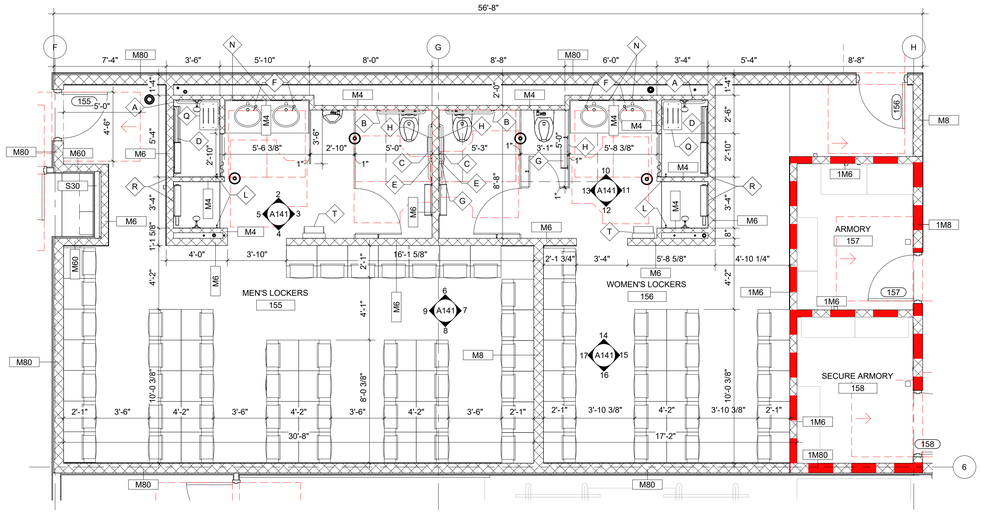

1 155 MEN/156 WOMEN'S ENLARGED LOCKER ROOM PLAN
1/4" = 1'-0"

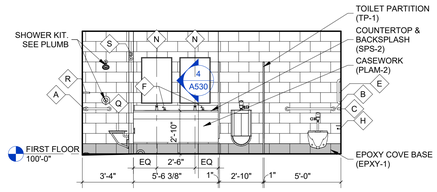

2 155 MEN'S LOCKERS RR - WEST ELEV
1/4" = 1'-0"

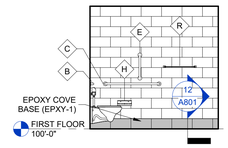

3 155 MEN'S LOCKERS RR - NORTH ELEV
1/4" = 1'-0"

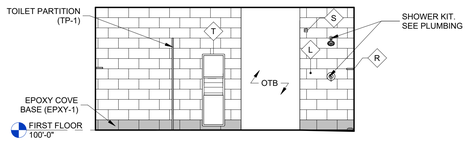

4 155 MEN'S LOCKERS RR - EAST ELEV
1/4" = 1'-0"

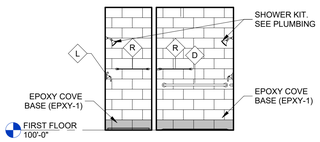

5 155 MEN'S LOCKERS RR - SOUTH ELEV
1/4" = 1'-0"

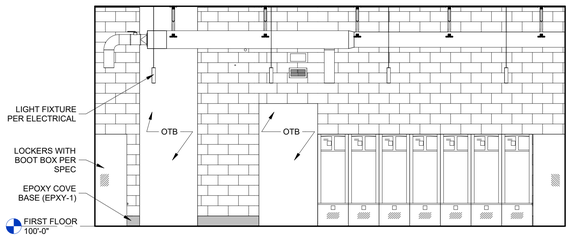

6 155 MEN'S LOCKERS - WEST ELEVATION
1/4" = 1'-0"

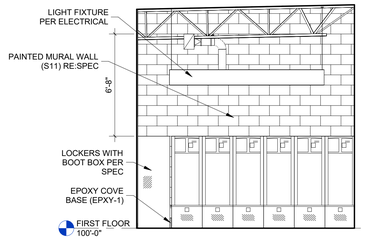

7 155 MEN'S LOCKERS - NORTH ELEV
1/4" = 1'-0"

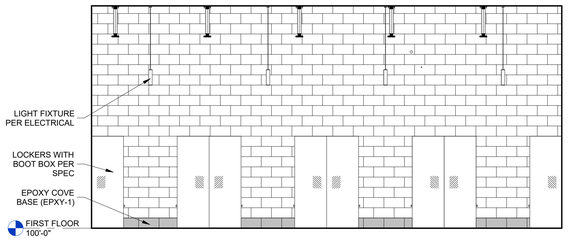

8 155 MEN'S LOCKERS - EAST ELEV
1/4" = 1'-0"

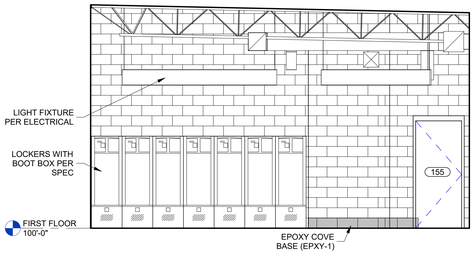

9 155 MEN'S LOCKERS - SOUTH ELEV
1/4" = 1'-0"

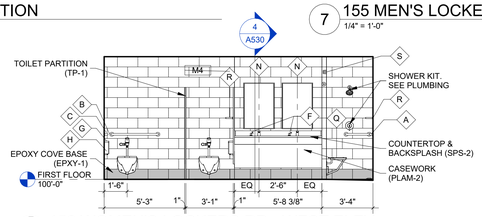

10 156 WOMEN'S LOCKERS RR - WEST ELEV
1/4" = 1'-0"

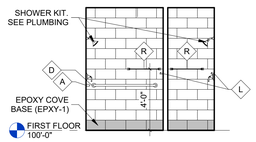

11 156 WOMEN'S LOCKERS RR - NORTH ELEV
1/4" = 1'-0"

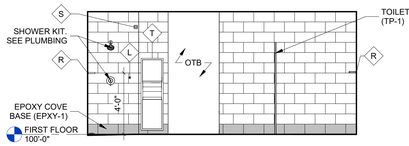

12 156 WOMEN'S LOCKERS RR - EAST ELEV
1/4" = 1'-0"

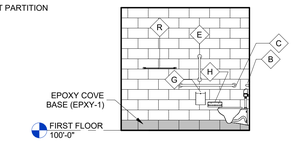

13 156 WOMEN'S LOCKERS RR - SOUTH ELEV
1/4" = 1'-0"

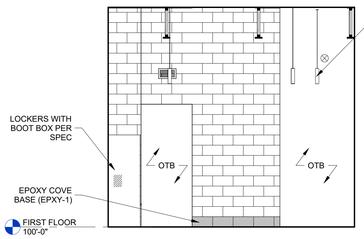

14 156 WOMEN'S LOCKERS - WEST ELEV
1/4" = 1'-0"

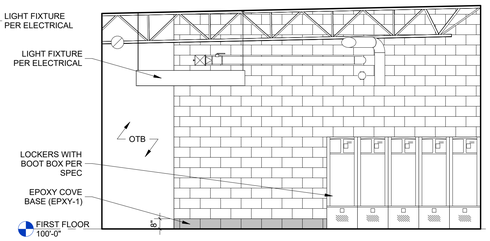

15 156 WOMEN'S LOCKERS - NORTH ELEV
1/4" = 1'-0"

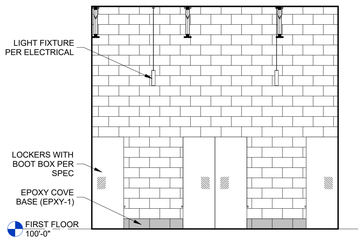

16 156 WOMEN'S LOCKERS - EAST ELEV
1/4" = 1'-0"

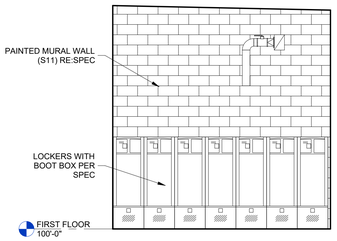

17 156 WOMEN'S LOCKERS - SOUTH ELEV
1/4" = 1'-0"

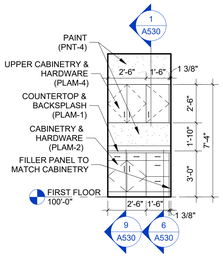

18 109 CORRIDOR - CASEWORK
1/4" = 1'-0"

PRINTED: 6/11/2025 11:42:34 AM

NIXA POLICE DEPARTMENT

305 N LEEANN DR
NIXA, MO 65714

INSIGHT DESIGN IDeA ARCHITECTS
112 S. Main St., Nixa, MO 65714 Ph: 417-724-8553

CJD Engineering | Energy | Innovation

olsson

METTEMEYER ENGINEERING LLC

Christini ARCHITECTS
Architecture / Interior Design / Graphics
1401 S. Brentwood Blvd. | Suite 975 | St. Louis, Missouri 63144
314-725-0880 | arch@christini.com

Reissue Date

Professional of Record

STATE OF MISSOURI
NATHAN P. RAPP
NUMBER A-6000
ARCHITECT

DATE 2025-06-11

Copyright 2025 ©
These prints are the property of the architect and shall be usedonly for the project referenced above

Architect
LMH / NPR

Project #
24-003

Date
2025-06-11

Drawing Title:
ENLARGED LOCKER ROOM PLANS

Sheet:
A141

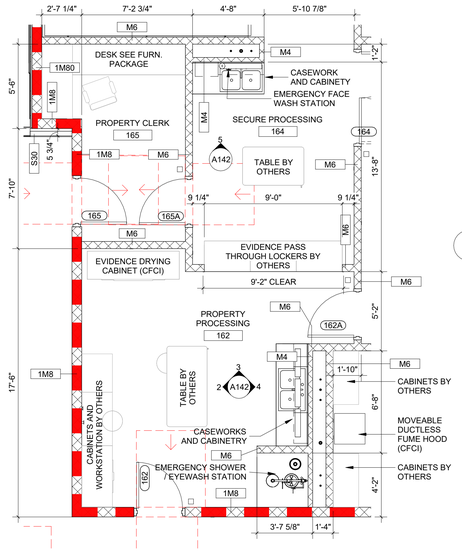

1 EVIDENCE AREA ENLARGED PLANS
1/4" = 1'-0"

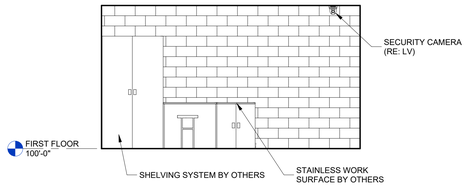

2 162 PROPERTY PROCESS. - SOUTH ELEVATION
1/4" = 1'-0"

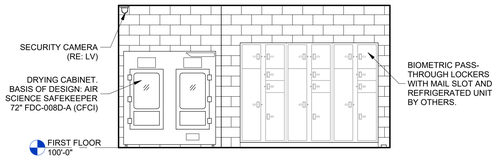

3 162 PROPERTY PROCESS. - WEST ELEVATION
1/4" = 1'-0"

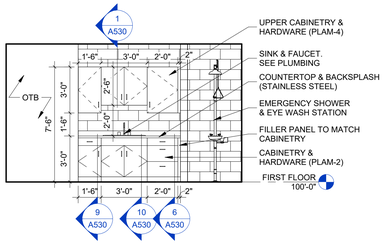

4 162 PROPERTY PROCESS. - NORTH ELEVATION
1/4" = 1'-0"

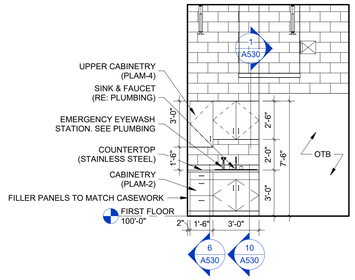

5 164 SECURE PROCESS. - WEST ELEVATION
1/4" = 1'-0"

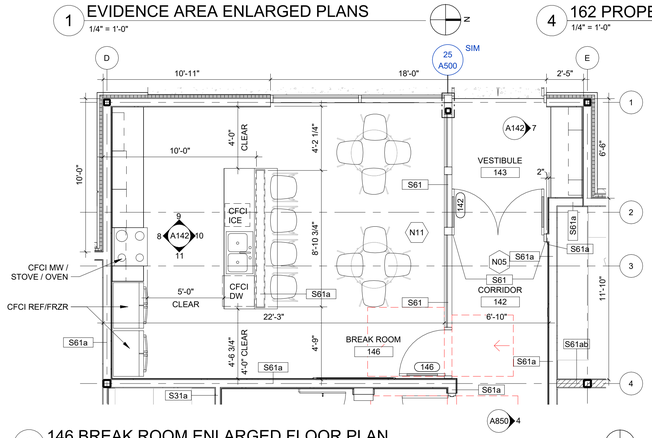

6 146 BREAK ROOM ENLARGED FLOOR PLAN
1/4" = 1'-0"

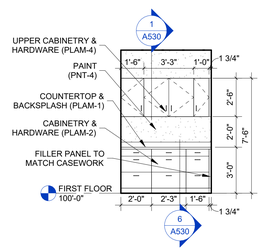

7 143 VESTIBULE - NORTH ELEVATION
1/4" = 1'-0"

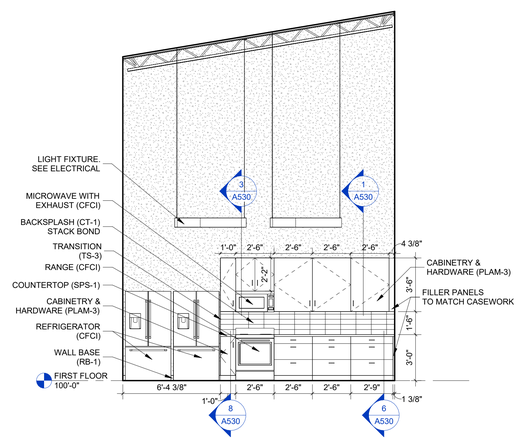

8 146 BREAKROOM - SOUTH ELEVATION
1/4" = 1'-0"

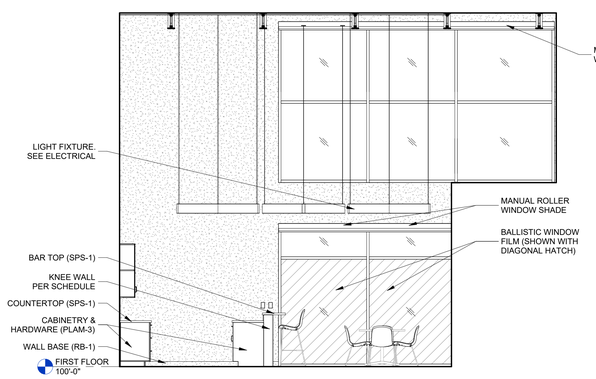

9 146 BREAK ROOM - WEST ELEVATION
1/4" = 1'-0"

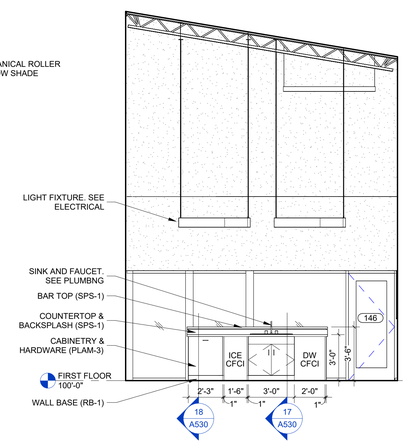

10 146 BREAKROOM - NORTH ELEVATION
1/4" = 1'-0"

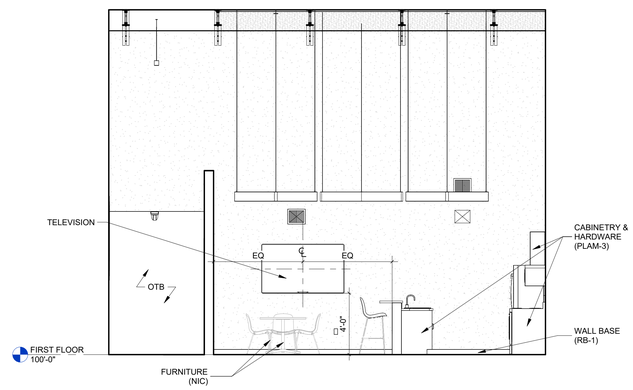

11 146 BREAK ROOM - EAST ELEVATION
1/4" = 1'-0"

GENERAL FLOOR PLAN NOTES:

A. REFER TO COVER SHEET FOR GENERAL PROJECT NOTES.
B. EGRESS DOORS SHALL NOT LOCK AGAINST THE DIRECTION OF EGRESS TRAVEL AT ANY TIME.
C. INTERIOR DIMENSIONS ARE GIVEN TO THE FINISHED FACE OF STEEL STUD OR CMU, UNLESS NOTED OTHERWISE.
D. ALL ROUGH OPENINGS FOR DOORS TO BE INSTALLED 4" FROM CLOSEST PARTITION UNLESS OTHERWISE NOTED.
E. PROVIDE CONTROL JOINTS IN GYPSUM BOARD AT SPACING NOT EXCEEDING 30'-0" OC, HORIZONTAL OR VERTICAL, AT ALL RUNS OF WALL OR SOFFIT. CONTROL JOINTS SHALL CONSIST OF DOUBLE STUDS OR DOUBLE FURRING CHANNELS PROVIDED BY CONTRACTOR. IN FIRE RATED PARTITIONS, PROVIDE FIRE RATED CONTROL JOINTS. DO NOT ALLOW BRACING TO SPAN ACROSS CONTROL JOINTS.
F. REFER TO PLAN FOR FIRE EXTINGUISHER CABINET (FEC) LOCATIONS. VERIFY SIZE AND CONFIGURATION WITH PROJECT MANUAL AND LIFE SAFETY SHEET PRIOR TO INSTALLATION. **OWNER SHALL PROVIDE ADDITIONAL FIRE EXTINGUISHER CABINETS (FEC) IF REQUESTED BY FIRE MARSHAL DURING INSPECTION OR WALK THROUGH, TO BE INSTALLED BY CONTRACTOR. COORDINATE ALL LOCATIONS WITH ARCHITECT PRIOR TO INSTALLATION.**
G. FURNITURE SHOWN IN HALFTONE ON PLAN

GENERAL INTERIOR ELEVATION NOTES:

A. PROVIDE FIRE RETARDANT TREATED WOOD BLOCKING IN WALLS AT CASEWORK, COUNTERTOPS, SHELVING, MONITOR BRACKETS, WALL MOUNTED EQUIPMENT, ETC.
B. COORDINATE PLASTIC LAMINATE, SOLID POLYMER, QUARTZ SURFACE, ETC SURFACE PATTERN/GRAIN TO RUN IN THE SAME DIRECTION AT CORNERS AND RETURNS. COORDINATE 3-SIDED CORNERS WITH ARCHITECT FOR PATTERN DIRECTION.

RESTROOM ACCESSORIES SCHEDULE NOTES

A. CONTRACTOR RESPONSIBLE FOR PROVIDING ALL FIRE-RETARDANT WOOD BLOCKING AS REQUIRED FOR PROPER INSTALLATION OF ACCESSORIES, INCLUDING OWNER PROVIDED ITEMS.
B. ALL ACCESSORIES TO BE INSTALLED PER ADA REQUIREMENTS.
C. MODEL NUMBERS SHOWN FOR DESIGN INTENT. SEE APPROVED EQUALS.

NIXA POLICE DEPARTMENT

305 N LEEANN DR
NIXA, MO 65714

INSPIRE DESIGN IDeA ARCHITECTS
112 S. Main St., Nixa, MO 65714 Ph: 417-724-8553

CJD Engineering | Energy | Innovation

olsson

METTEMEYER ENGINEERING LLC

Chiodini ARCHITECTS
Architecture / Interior Design / Graphics
1401 S. Brentwood Blvd. | Suite 975 | St. Louis, Missouri 63144
314-725-0088 | arch@chiodini.com

Reissue Date

Professional of Record

STATE OF MISSOURI — NATHAN P. RAPP — NUMBER A-6000 — ARCHITECT

DATE 2025-06-11

Copyright 2025 ©
These prints are the property of the architect and shall be usedonly for the project referenced above

Architect
LMH / NPR

Project #
24-003

Date
2025-06-11

Drawing Title:
ENLARGED PLANS AND ELEVATIONS

Sheet:
A142

PRINTED: 6/11/2025 11:42:40 AM

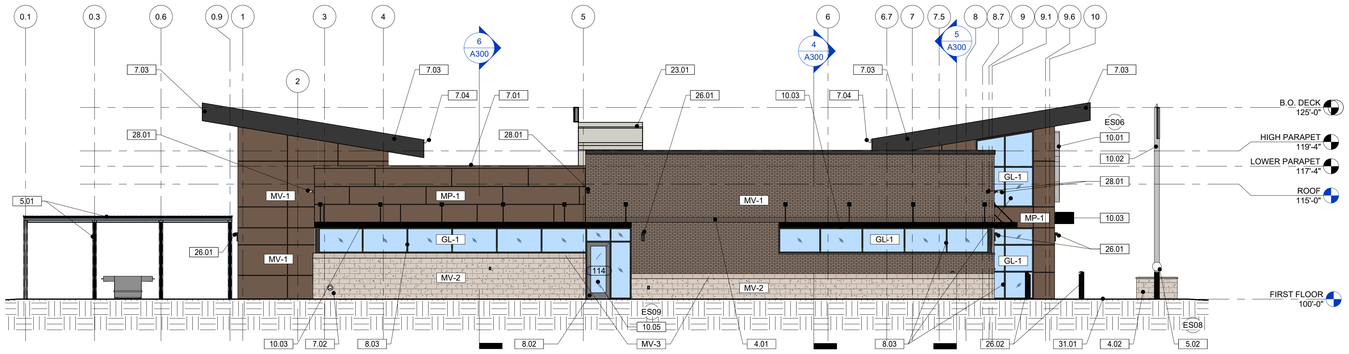

1 SOUTH ELEVATION
1/8" = 1'-0"

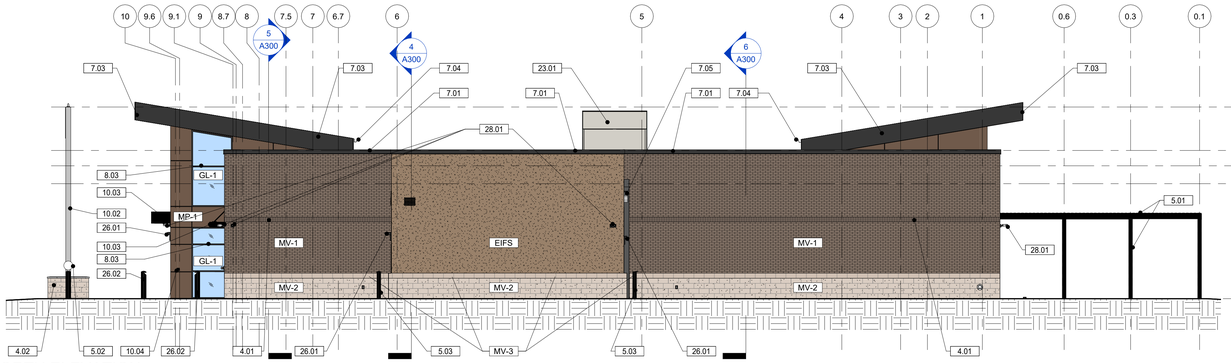

2 NORTH ELEVATION
1/8" = 1'-0"

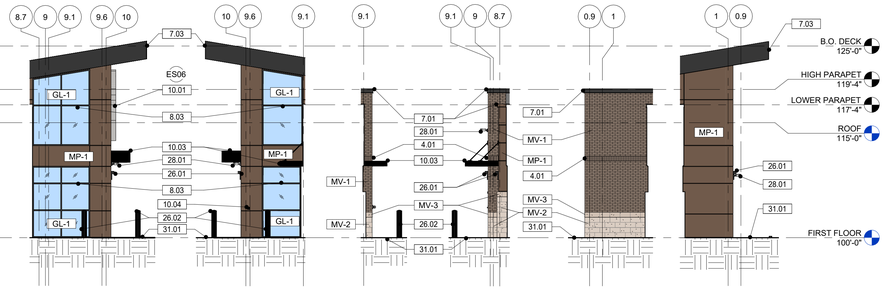

5 ELEV
1/8" = 1'-0"

6 ELEV
1/8" = 1'-0"

7 ELEV
1/8" = 1'-0"

8 ELEV
1/8" = 1'-0"

9 ELEV
1/8" = 1'-0"

10 ELEV
1/8" = 1'-0"

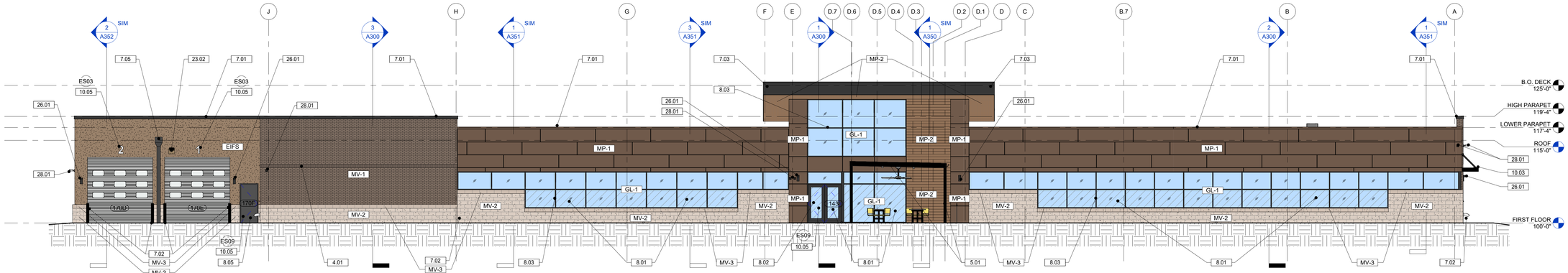

3 WEST ELEVATION
1/8" = 1'-0"

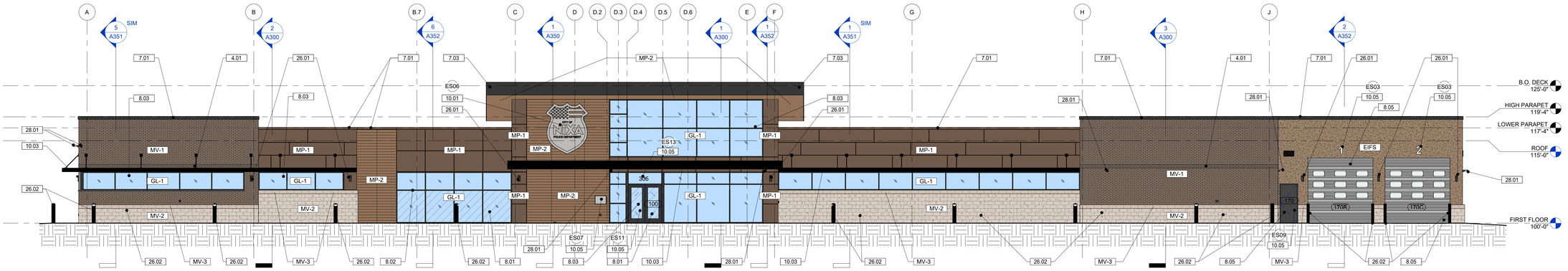

4 EAST ELEVATION
1/8" = 1'-0"

DEMO / NEW CONSTRUCTION LEGEND

- NEW CONSTRUCTION: UNRATED, PARTIAL-HEIGHT WALL TO CEILING
- NEW CONSTRUCTION: UNRATED, FULL-HEIGHT WALL TO DECK
- NEW CONSTRUCTION: 1 HOUR FIRE SEPARATION
- NEW CONSTRUCTION: 2 HOUR FIRE SEPARATION

KEYNOTES - ELEVATIONS	
4.01	BRICK SOLDIER COURSE MASONRY VENEEER SEE WALL SECTIONS
4.02	CUSTOM PLANTER BOX, SEE SHEET A051
5.01	GALVANIZED METAL SHADE STRUCTURE. SEE STRUCTURAL
5.02	LIT GLOBE SIGNAGE BOLLARD, SEE SHEET A051
5.03	BOLLARD @ OVERHEAD DOOR, TYP.
7.01	PREFIN SHEET METAL COPING SYSTEM. SEE EXTERIOR MATERIAL LEGEND.
7.02	DOWNSPOUT NOZZLE
7.03	FLAT PROFILE METAL PANELS. BASIS OF DESIGN: LONGBOARD TRIM PANELS
7.04	PREFIN METAL K-STYLE GUTTER AND DOWNSPOUT
7.05	PREFIN METAL SCUPPER AND DOWNSPOUT
8.01	BALLISTIC WINDOW FILM (SHOWN WITH DIAGONAL HATCH)
8.02	THERMALLY BROKEN ALUMINUM STOREFRONT SYSTEM W/ INSULATED GLASS DOORS
8.03	THERMALLY BROKEN ALUMINUM STOREFRONT SYSTEM
8.05	HOLLOW METAL DOOR AND FRAME SEE SCHEDULE AND DETAILS
10.01	LIT BUILDING SIGNAGE. PROVIDE ELECTRICAL HOOKUP. COORDINATE WITH OWNER AND SIGNAGE VENDOR
10.02	(3) FLAG POLES. SEE DETAIL AND ENLARGED SITE PLAN
10.03	30" DEEP METAL AWNING WITH INTEGRAL GUTTER & DOWNSPOUT - BASIS OF DESIGN - LAWRENCE FABRIC LFS-LFA
10.04	RAPID ENTRY SYSTEM EQUAL TO KNOX 3200 SERIES KEYBOX. SEE SHEET G002
10.05	EXTERIOR SIGNAGE (RE: SIGNAGE SPEC AND SIGNAGE LEGEND)
23.01	ROOFTOP MECHANICAL UNIT. SEE MECHANICAL
23.02	HVAC GRILLE - SEE MEP. PAINT TO MATCH SURROUNDING MATERIAL
26.01	EXTERIOR LIGHT FIXTURE - SEE ELEC
26.02	BOLLARD. SEE SHEET A051 FOR LOCATION AND DETAILS.
28.01	CAMERA - SEE LOW VOLTAGE
31.01	GRADE / PAVING / PATHWAY (RE: CIVIL)

GENERAL EXTERIOR ELEVATION NOTES

A. COORDINATE ALL GRADES WITH CIVIL DOCUMENTS
B. VERIFY FINAL CIVIL GRADES AT BUILDING PRIOR TO CONCRETE FOUNDATION AND BRICK SHELF INSTALLATION.
C. FIELD VERIFY FINAL MASONRY SHELF ELEVATION PRIOR TO MASONRY VENEER INSTALLATION.
D. REFER TO DOOR SCHEDULE AND FRAME ELEVATIONS FOR ADDITIONAL OPENINGS INFORMATION.

EXTERIOR MATERIAL LEGEND

- **MV-1 - MASONRY VENEER 1** RUNNING BOND, 4"x2-2/3"x8" (NOMINAL) BRICK VENEER (RE: SPEC)
- **EIFS - EXTERIOR INSULATION FINISHING SYSTEMS** EIFS, STUCCO TEXTURE (RE: SPEC)
- **MV-2 - MASONRY VENEER 2** RUNNING BOND, 8"x16"x4" (NOMINAL) SPLIT FACED CMU VENEER (RE: SPEC)
- **MV-3 - MASONRY VENEER 3** RUNNING BOND, 8"x16"x4" (NOMINAL) SMOOTH CMU VENEER (RE: SPEC)
- **PREFINISHED METAL COPING CAP @ T.O. BRICK & EIFS WALLS** FINISH: STATUATORY BRONZE (RE: SPEC)
- **FASCIA @ OVERHANG** FINISH: STATUATORY BRONZE (RE: SPEC)
- **MP-1 - METAL PANEL 1** FLAT PROFILE METAL PANELS, SOLID COLOR (RE: SPEC)
- **COPING CAP @ T.O. MP-1 WALLS - PREFINISHED METAL** FINISH TO MATCH MP-1 (RE: SPEC)
- **MP-2 - METAL PANEL 2** WOOD-LOOK METAL PANEL (RE: SPEC)
- **GL-1 - GLAZING 1** GLAZING UNIT (RE: FRAME ELEVATIONS AND SPEC)
- **GL-2 - GLAZING 2** NOT USED
- **GL-3 - GLAZING 3** NOT USED

NIXA POLICE DEPARTMENT

305 N LEEANN DR
NIXA, MO 65714

INSPIRE DESIGN IDeA ARCHITECTS
112 S. Main St., Nixa, MO 65714 Ph: 417-724-8553

CJD Engineering | Energy | Innovation

olsson

METTEMEYER ENGINEERING LLC

Chiodini ARCHITECTS
Architecture / Interior Design / Graphics
1401 S. Brentwood Blvd. | Suite 925 | St. Louis, Missouri 63144
314-725-0088 | arch@chiodini.com

Reissue Date

Professional of Record

STATE OF MISSOURI — NATHAN P. RAPP — NUMBER A-6001038 — ARCHITECT

DATE 2025-06-11

Copyright 2025 ©
These prints are the property of the architect and shall be usedonly for the project referenced above

Architect
LMH / NPR

Project #
24-003

Date
2025-06-11

Drawing Title:
EXTERIOR ELEVATIONS

Sheet:
A200

PRINTED: 6/11/2025 11:43:10 AM

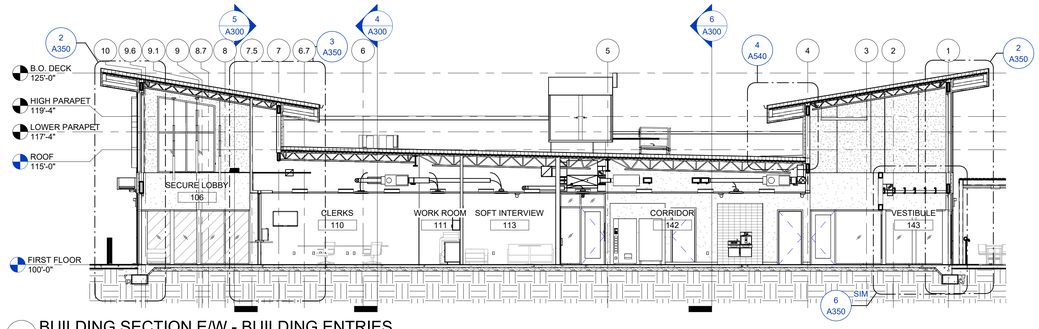

1 BUILDING SECTION E/W - BUILDING ENTRIES
1/8" = 1'-0"

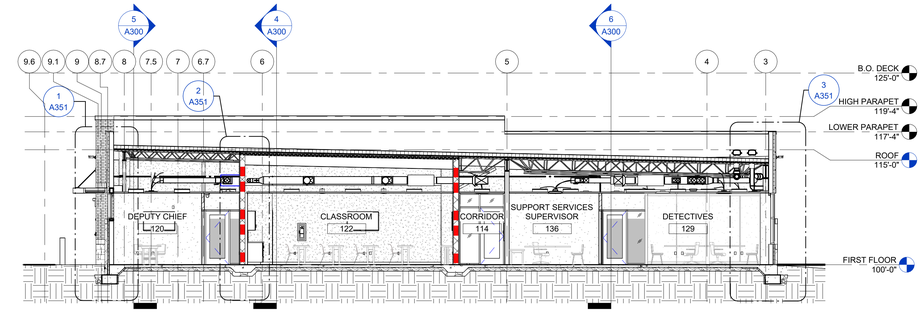

2 BUILDING SECTION E/W - OFFICES
1/8" = 1'-0"

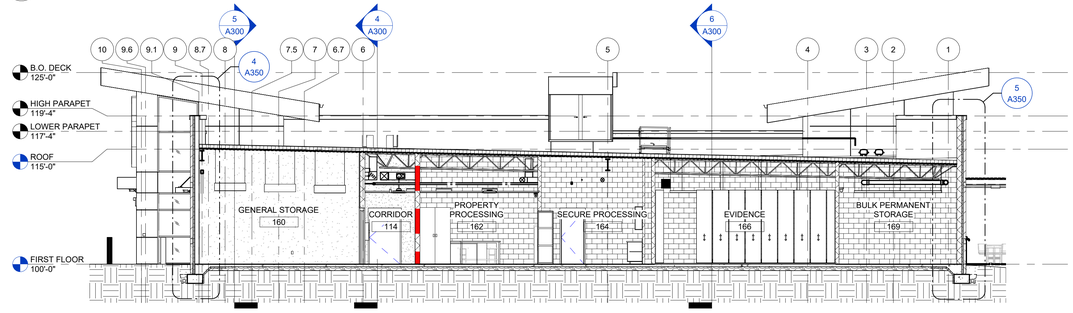

3 BUILDING SECTION E/W - EVIDENCE
1/8" = 1'-0"

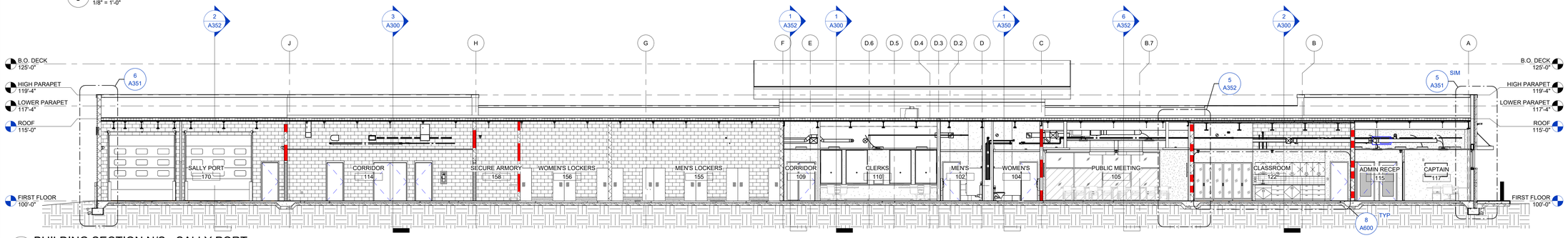

4 BUILDING SECTION N/S - SALLY PORT
1/8" = 1'-0"

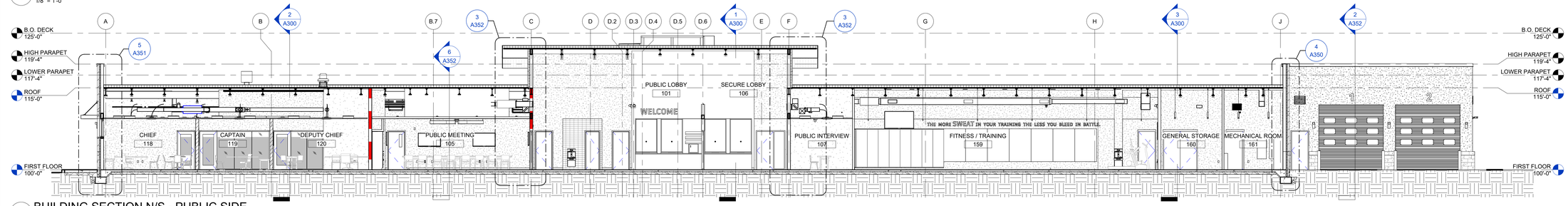

5 BUILDING SECTION N/S - PUBLIC SIDE
1/8" = 1'-0"

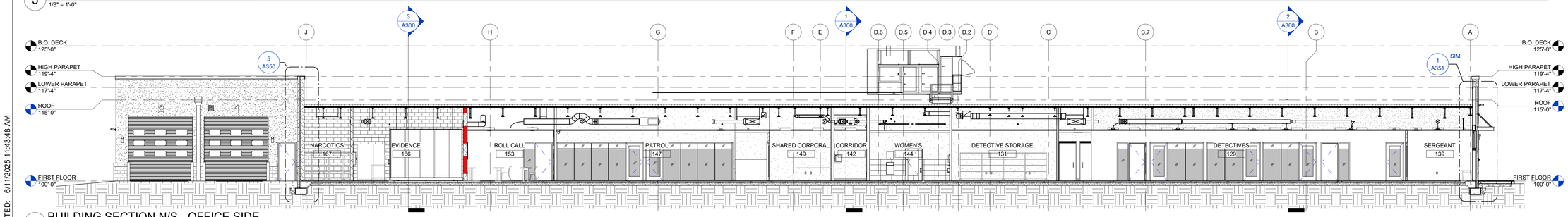

6 BUILDING SECTION N/S - OFFICE SIDE
1/8" = 1'-0"

PRINTED: 6/11/2025 11:43:48 AM

NIXA POLICE DEPARTMENT

305 N LEEANN DR
NIXA, MO 65714

IDeA ARCHITECTS
112 S. Main St., Nixa, MO 65714 Ph: 417-724-8553

CJD Engineering | Energy | Innovation

olsson

METTEMEYER ENGINEERING LLC

Christine ARCHITECTS
Architecture / Interior Design / Graphics
1401 S. Brentwood Blvd. | Suite 375 | St. Louis, Missouri 63144
314-725-5888 | ann@christinearch.com

Reissue Date

Professional of Record

STATE OF MISSOURI
NATHAN P. RAPP
NUMBER A-2001038751
ARCHITECT

DATE 2025-06-11

Copyright 2025 ©
These prints are the property of the architect and shall be usedonly for the project referenced above

Architect
LMH / NPR

Project #
24-003

Date
2025-06-11

Drawing Title:
BUILDING SECTIONS

Sheet:
A300

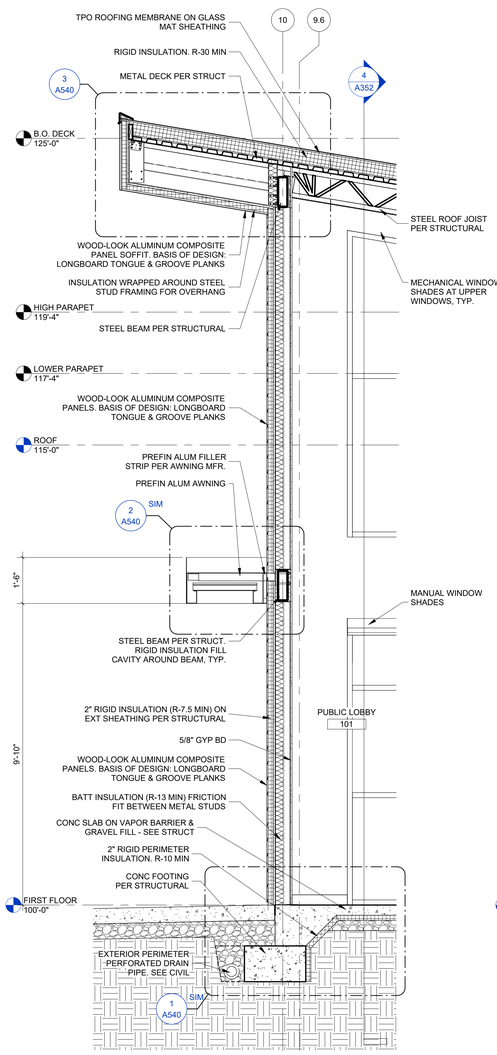

1 WALL SECTION - HIGH ENTRY OVERHANG @ WOOD LOOK SIDING
1/2" = 1'-0"

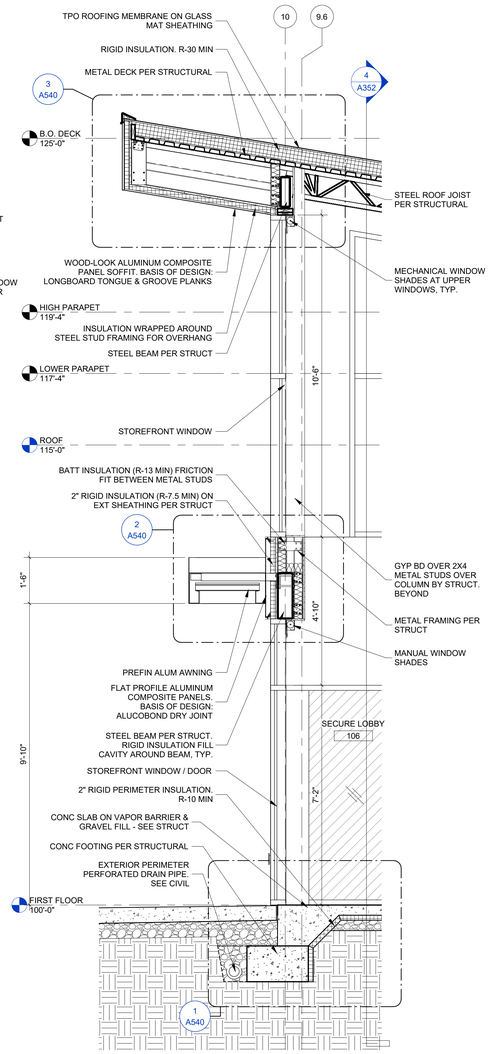

2 WALL SECTION - HIGH ENTRY OVERHANG
1/2" = 1'-0"

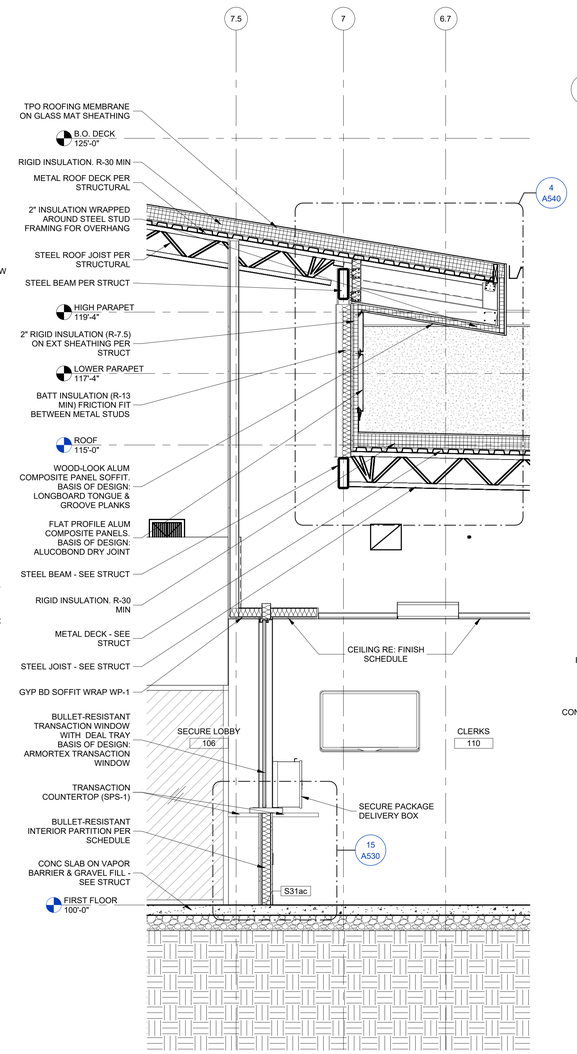

3 WALL SECTION - LOW ENTRY OVERHANG @ CLERK DESK
1/2" = 1'-0"

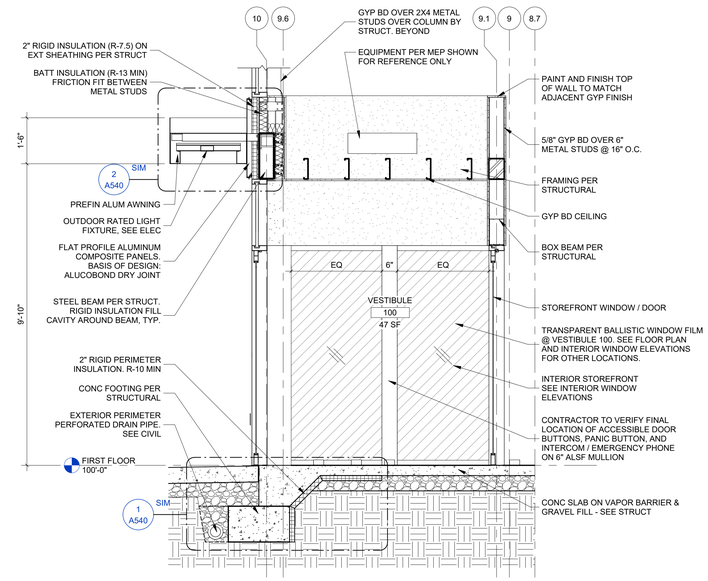

6 WALL SECTION - VESTIBULE
1/2" = 1'-0"

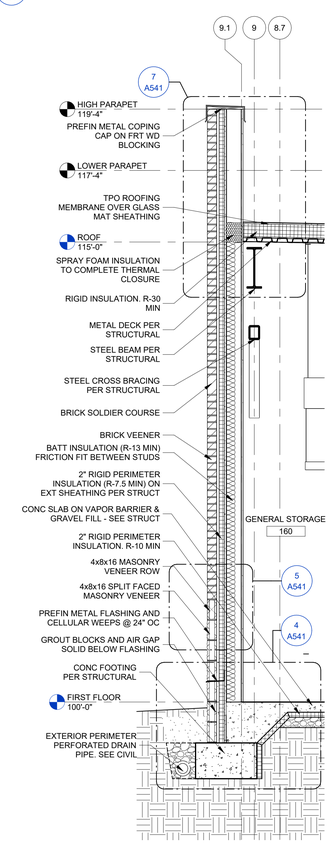

4 WALL SECTION - TYP BRICK VENEER AT METAL STUD
1/2" = 1'-0"

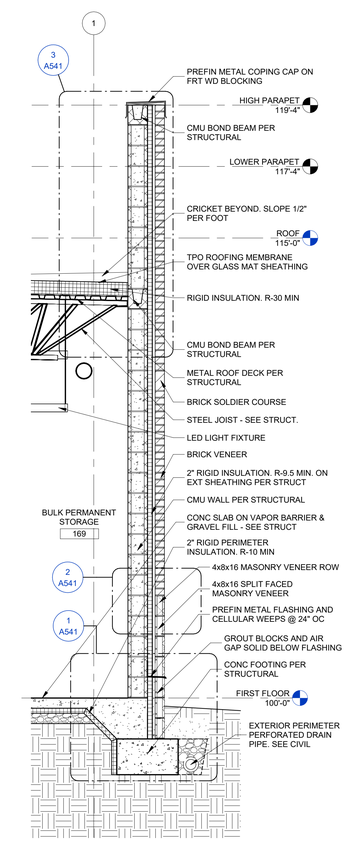

5 WALL SECTION - TYP BRICK VENEER AT CMU
1/2" = 1'-0"

PRINTED: 6/11/2025 11:43:51 AM

NIXA POLICE DEPARTMENT

305 N LEEANN DR
NIXA, MO 65714

IDeA ARCHITECTS
112 S. Main St., Nixa, MO 65714 Ph: 417-724-8553
CJD Engineering | Energy | Innovation
olsson
METTEMEYER ENGINEERING LLC
Chiodini ARCHITECTS
Architecture / Interior Design / Graphics
1401 S. Brentwood Blvd. | Suite 575 | St. Louis, Missouri 63144
314-725-0088 | arch@chiodini.com

Reissue Date

Professional of Record

STATE OF MISSOURI — NATHAN P. RAPP — NUMBER A-2001038754 — ARCHITECT

DATE 2025-06-11

Copyright 2025 ©
These prints are the property of the architect and shall be usedonly for the project referenced above

Architect
LMH / NPR

Project #
24-003

Date
2025-06-11

Drawing Title:
WALL SECTIONS

Sheet:
A350

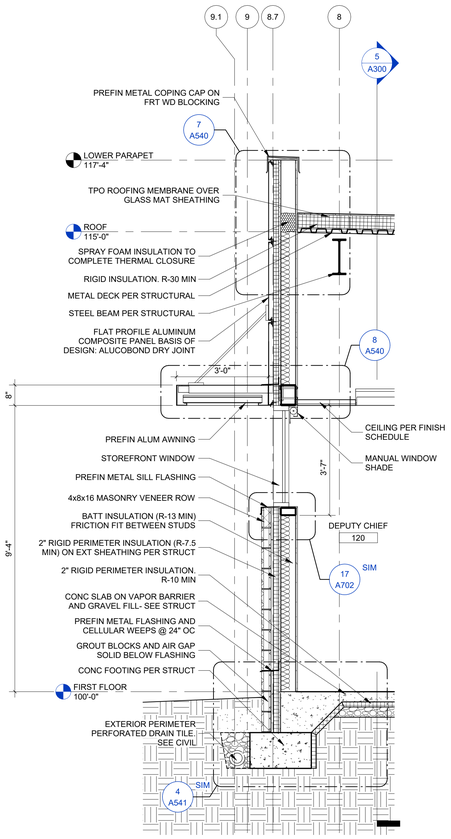

1 WALL SECTION - TYP METAL PANEL AND SUN SHADE
1/2" = 1'-0"

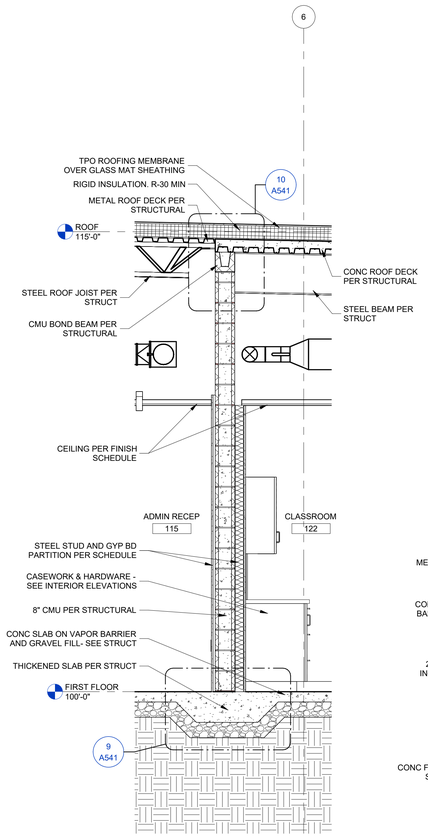

2 WALL SECTION - HARDENED STORM SHELTER WALL
1/2" = 1'-0"

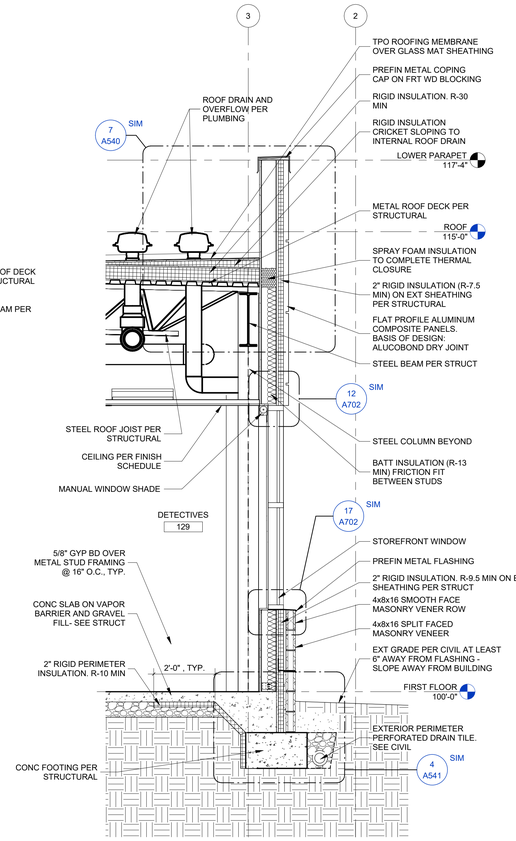

3 WALL SECTION - OFFICE STOREFRONT
1/2" = 1'-0"

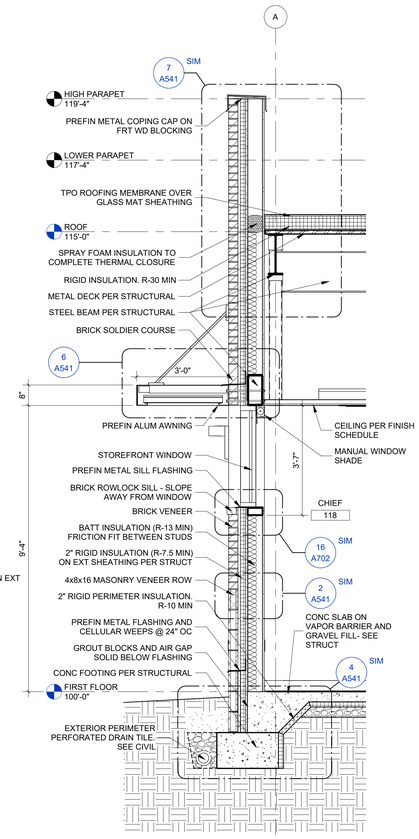

5 WALL SECTION - TYP BRICK VENEER AND SUN SHADE
1/2" = 1'-0"

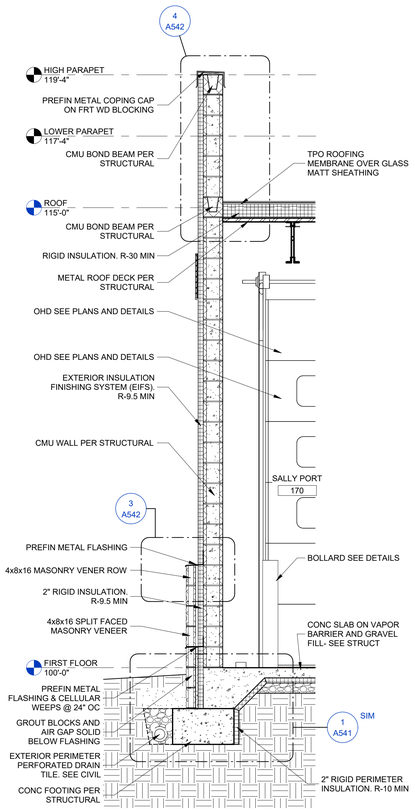

6 WALL SECTION - TYP EIFS AT CMU
1/2" = 1'-0"

PRINTED: 6/11/2025 11:43:53 AM

NIXA POLICE DEPARTMENT

305 N LEEANN DR
NIXA, MO 65714

MISSOURI DESIGN IDeA ARCHITECTS
112 S. Main St., Nixa, MO 65714 Ph: 417-724-8553

CJD Engineering | Energy | Innovation

olsson

METTEMEYER ENGINEERING LLC

Christine ARCHITECTS
Architecture / Interior Design / Graphics
1421 S. Brentwood Blvd. | Suite 575 | St. Louis, Missouri 63144
314-725-5080 | arch@christin.com

Reissue Date

Professional of Record

STATE OF MISSOURI
NATHAN P. RAPP
NUMBER
A-2006038877
ARCHITECT

DATE 2025-06-11

Copyright 2025 ©
These prints are the property of the architect and shall be usedonly for the project referenced above

Architect
LMH / NPR

Project #
24-003

Date
2025-06-11

Drawing Title:
WALL SECTIONS

Sheet:
A351

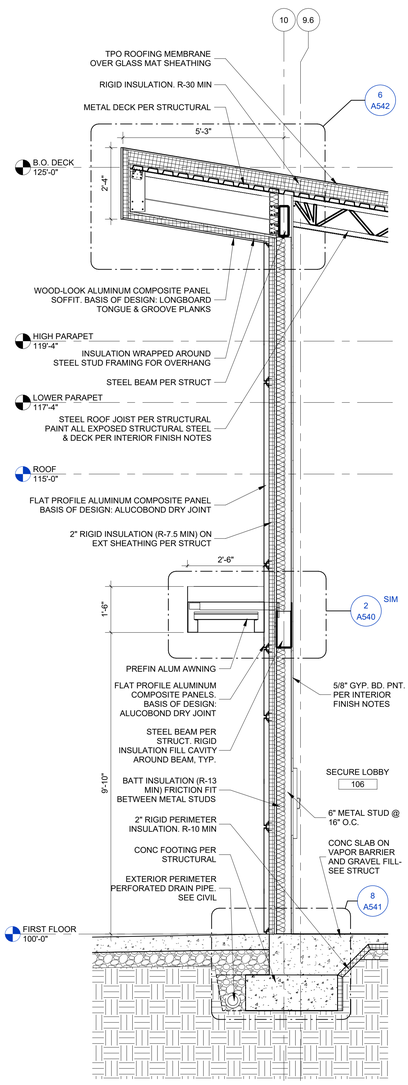

1 WALL SECTION - HIGH ENTRY OVERHANG @ WOOD LOOK SIDING1
1/2" = 1'-0"

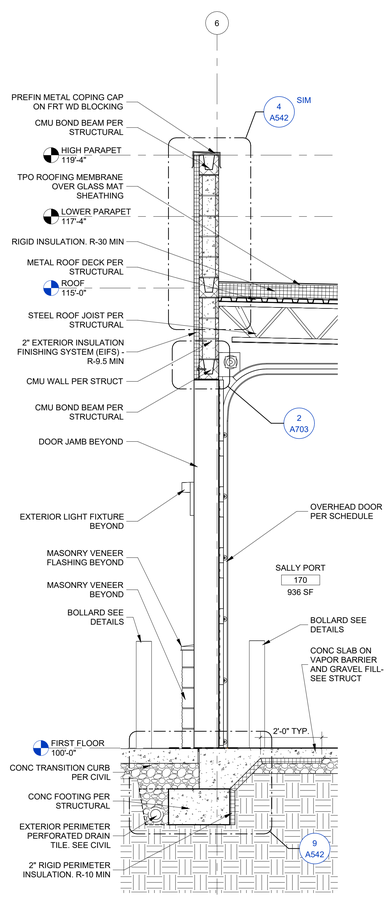

2 WALL SECTION - SALLY PORT GARAGE DOOR
1/2" = 1'-0"

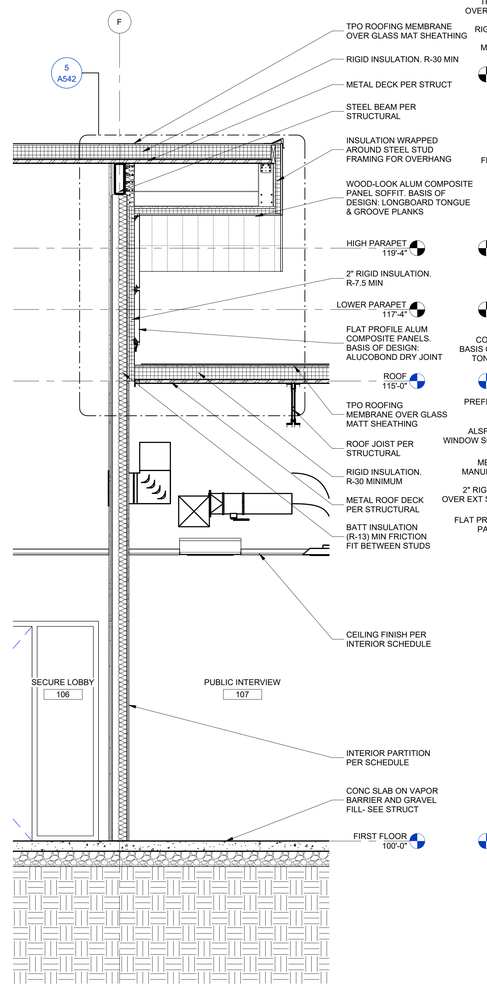

3 WALL SECTION - ENTRY OVERHANG
1/2" = 1'-0"

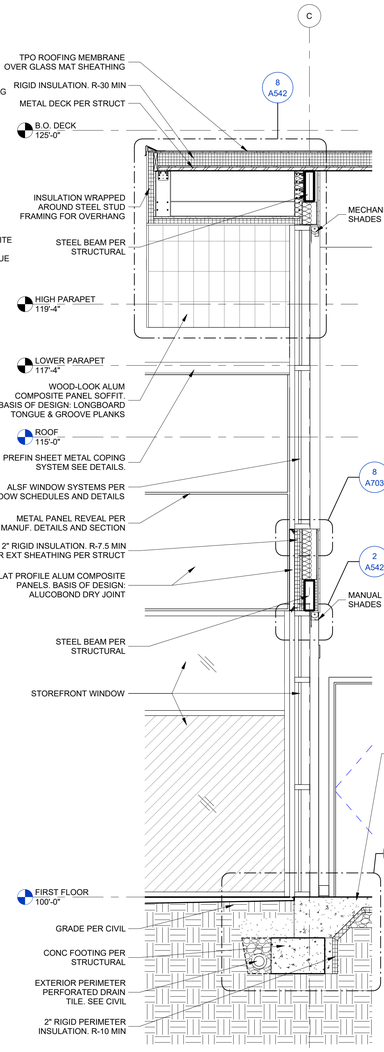

4 Section 1
1/2" = 1'-0"

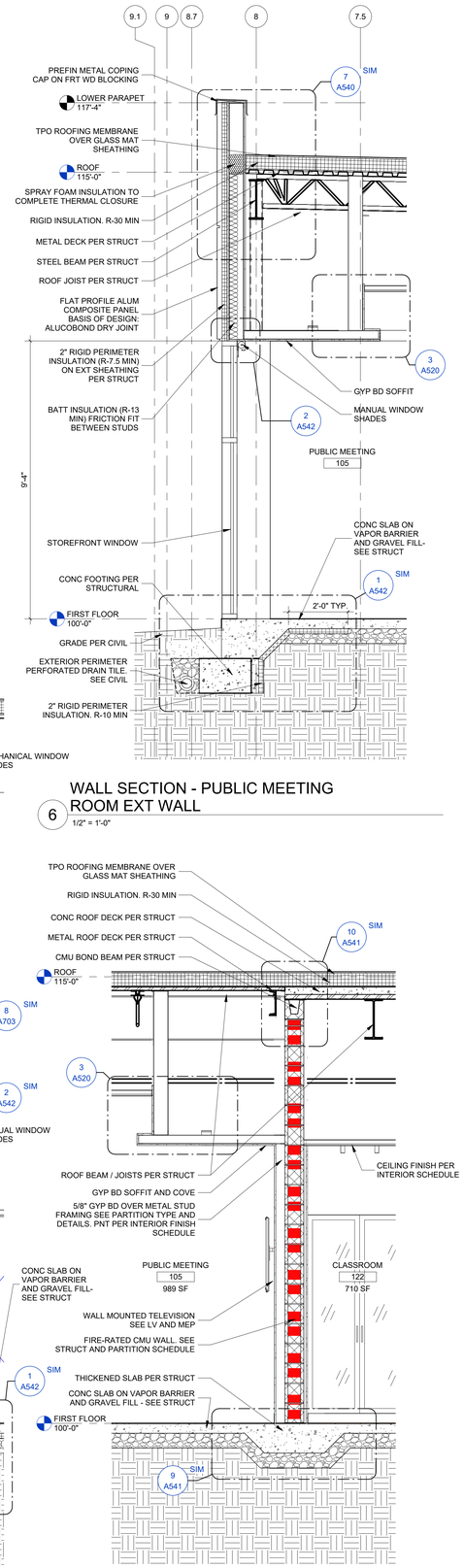

6 WALL SECTION - PUBLIC MEETING ROOM EXT WALL
1/2" = 1'-0"

5 WALL SECTION - @ PUBLIC MEETING / CLASSROOM
1/2" = 1'-0"

PRINTED: 6/11/2025 11:43:56 AM

NIXA POLICE DEPARTMENT

305 N LEEANN DR
NIXA, MO 65714

IDeA ARCHITECTS
112 S. Main St., Nixa, MO 65714 Ph: 417-724-8553

CJD Engineering | Energy | Innovation

olsson

METTEMEYER ENGINEERING LLC

Chiodini ARCHITECTS
Architecture / Interior Design / Graphics
1401 S. Brentwood Blvd. | Suite 570 | St. Louis, Missouri 63144
314-725-5588 | art@chiodini.com

Reissue Date

Professional of Record

STATE OF MISSOURI
NATHAN P. RAPP
NUMBER A-2001038424
ARCHITECT

DATE 2025-06-11

Copyright 2025 ©
These prints are the property of the architect and shall be usedonly for the project referenced above

Architect
LMH / NPR

Project #
24-003

Date
2025-06-11

Drawing Title:
WALL SECTIONS

Sheet:
A352

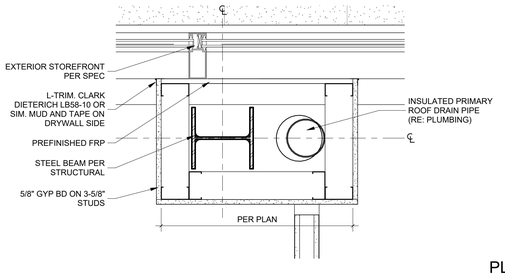

1 TYP GYP COLUMN WRAP DETAIL AT EXT WINDOW
1 1/2" = 1'-0"

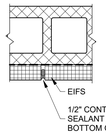

2 PLAN DETAIL @ EIFS CONTROL JOINT (TYP)
1 1/2" = 1'-0"

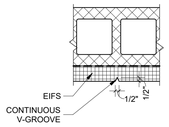

3 PLAN DETAIL @ EIFS V-GROOVE
1 1/2" = 1'-0"

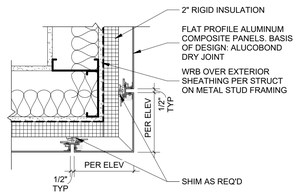

4 METAL COMPOSITE CORNER DETAIL
1 1/2" = 1'-0"

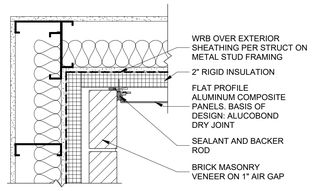

5 METAL COMPOSITE TO BRICK AT INTERIOR CORNER
1 1/2" = 1'-0"

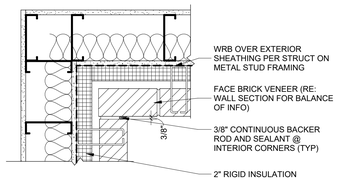

6 CONTROL JOINT - PLAN DETAIL - 90 DEG MASONRY CORNER
1 1/2" = 1'-0"

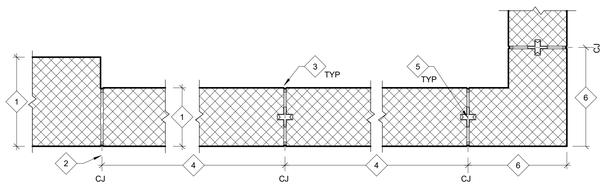

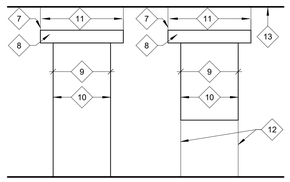

KEYED NOTES:

1. SCHEDULED PARTITION.
2. LOCATE CONTROL JOINTS AT CHANGES IN THE THICKNESS OF THE SCHEDULED PARTITIONS.
3. SEALANT AT EACH SIDE OF PARTITION.
4. TYPICAL CONTROL JOINT SPACING: CONTROL JOINTS TO BE SPACED AT A DISTANCE OF 1 1/2 TIMES THE WALL HEIGHT, CONTROL JOINT SPACING NOT TO EXCEED 24'-0" OC
5. PREFORMED CONTROL JOINT GASKET.
6. LOCATE CONTROL JOINTS ADJACENT TO CORNERS OF WALLS OR INTERSECTIONS WITHIN A DISTANCE EQUAL TO 1/2 THE TYPICAL CONTROL JOINT SPACING (RE: KEYED NOTE 4).
7. CONTROL JOINT AT ONE END OF LINTEL FOR OPENINGS LESS THAN 6'-0" IN WIDTH.
8. LINTEL.
9. OPENING IN CMU PARTITION (DOOR, WINDOW, ETC).
10. OPENING WIDTH.
11. CONTROL JOINT AT EACH END OF LINTEL FOR OPENINGS 6'-0" AND GREATER IN WIDTH.
12. CONTROL JOINTS AT EACH SIDE OF OPENING - ALIGN WITH JAMB.
13. BOTTOM OF DECK.
14. GC SHALL SUBMIT CONTROL JOINT LAYOUT TO ARCHITECT FOR APPROVAL BEFORE BEGINNING WORK.

7 CONTROL JOINT - TYPICAL CMU DETAILS
1 1/2" = 1'-0"

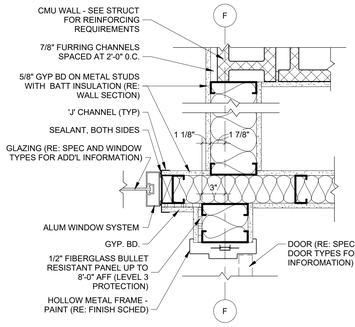

8 WALL ALIGNMENT
1 1/2" = 1'-0"

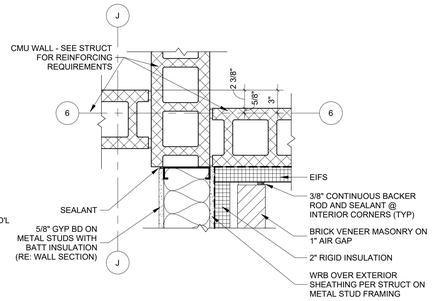

9 WALL ALIGNMENT
1 1/2" = 1'-0"

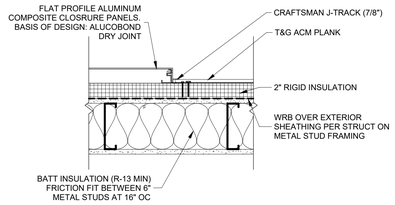

10 PLAN DETAIL - FLAT PROFILE ACM PANEL TO WOOD LOOK ACM PANEL TRANSITION
1 1/2" = 1'-0"

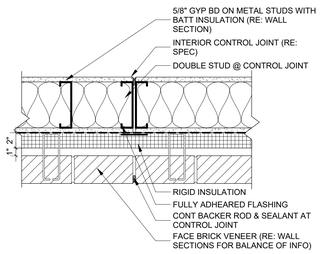

11 CONTROL JOINT - PLAN DETAIL - BRICK ON STUDS
1 1/2" = 1'-0"

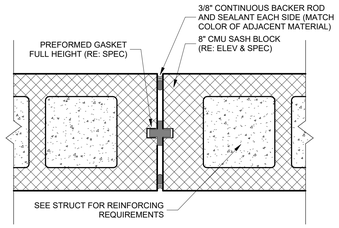

12 CONTROL JOINT - PLAN DETAIL - CMU
3" = 1'-0"

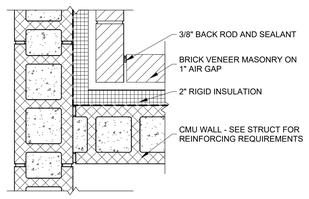

13 CORNER JOINT - PLAN DETAIL
1 1/2" = 1'-0"

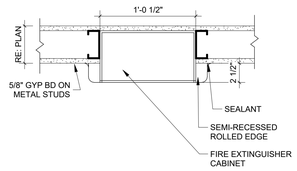

14 FEC SEMI-RECESSED PLAN SECTION
1 1/2" = 1'-0"

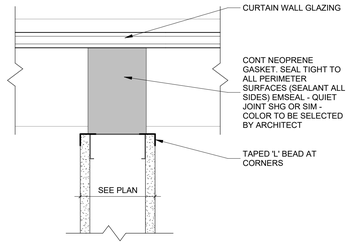

15 WALL END AT STOREFRONT
3" = 1'-0"

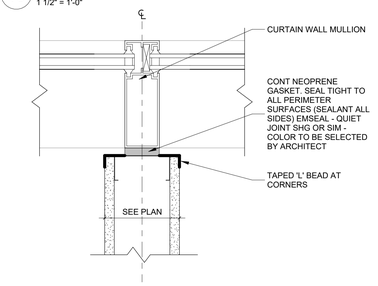

16 WALL END AT STOREFRONT MULLION
3" = 1'-0"

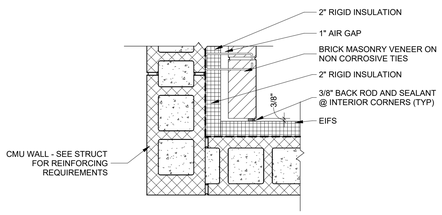

17 PLAN DETAIL - BRICK VENEER TO EIFS TRANSITION
1 1/2" = 1'-0"

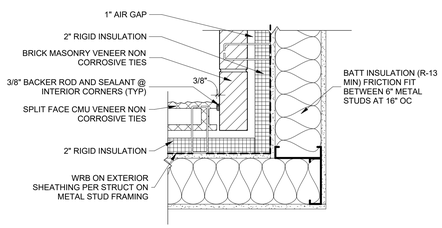

18 PLAN DETAIL - FACE BRICK TO CMU (SPLIT FACE) VENEER TRANSITION
1 1/2" = 1'-0"

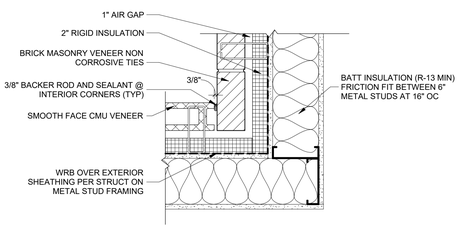

19 PLAN DETAIL - FACE BRICK TO CMU (SMOOTH FACE) VENEER TRANSITION
1 1/2" = 1'-0"

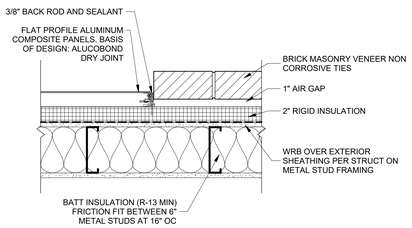

20 PLAN DETAIL - FACE BRICK TO FLAT PROFILE ACM PANEL TRANSITION
1 1/2" = 1'-0"

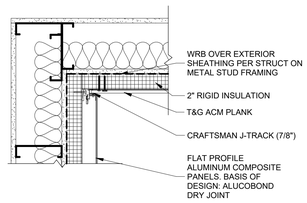

21 ACM FLAT PANEL TO WOOD LOOK ACM PANEL @ INSIDE CORNER
1 1/2" = 1'-0"

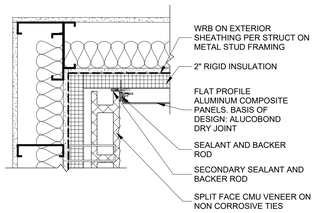

22 PLAN DETAIL - SPLATE FACE CMU VENEER ACM PANEL TRANSITION
1 1/2" = 1'-0"

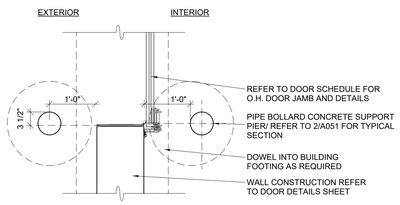

23 BOLLARD DETAIL - OVERHEAD DOOR
3/4" = 1'-0"

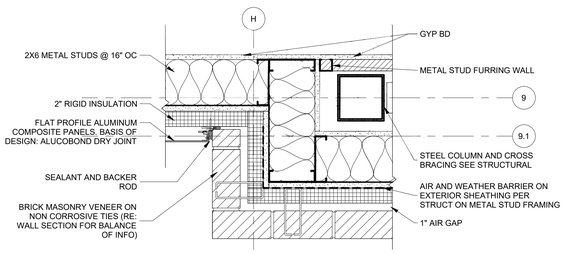

24 DETAIL - OUTSIDE CORNER @ BRICK
1 1/2" = 1'-0"

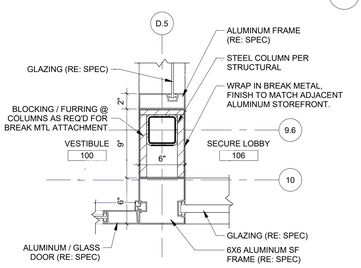

25 DETAIL - BREAK METAL WRAPPED COLUMN @ LOBBY 100
1 1/2" = 1'-0"

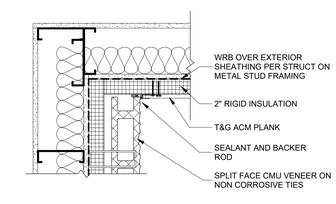

26 DETAIL - INSIDE CORNER AT CMU AND WOOD LOOK ACM
1 1/2" = 1'-0"

NIXA POLICE DEPARTMENT

305 N LEEANN DR
NIXA, MO 65714

INSPIRED DESIGN IDeA ARCHITECTS
112 S. Main St., Nixa, MO 65714 Ph: 417-724-8553

CJD Engineering | Energy | Innovation

olsson

METTEMEYER ENGINEERING LLC

Chiodini ARCHITECTS
Architecture / Interior Design / Graphics
1401 S. Brentwood Blvd. | Suite 570 | St. Louis, Missouri 63144
314-725-5588 | art@gchiodini.com

Reissue Date

Professional of Record

STATE OF MISSOURI
NATHAN P. RAPP
NUMBER A-2001038751
ARCHITECT

DATE 2025-06-11

Copyright 2025 ©
These prints are the property of the architect and shall be usedonly for the project referenced above

Architect
LMH / NPR

Project #
24-003

Date
2025-06-11

Drawing Title:
PLAN DETAILS

Sheet:
A500

PRINTED: 6/11/2025 11:43:59 AM

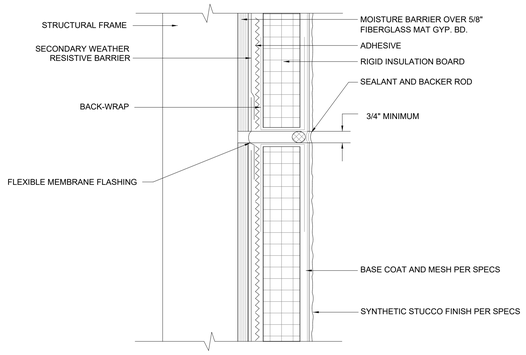

1 EIFS PLAN DETAIL
3" = 1'-0"

NOTES:
1) PROVIDE A BARRIER MEMBRANE BETWEEN THE SUBSTRATE AND DISSIMILAR MATERIAL TO PROVIDE AN AIR BARRIER AND A SECONDARY WEATHER BARRIER AT THE JOINT.
2) PROVIDE MINIMUM 3/4" JOINT WIDTH.
3) PROVIDE DRAINAGE FOR JOINT ASSEMBLY.

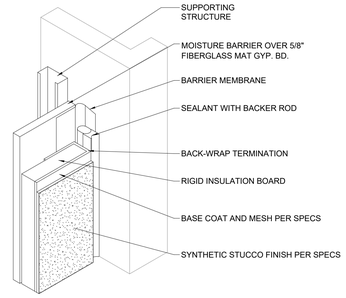

2 EIFS @ VERTICAL JOINT @ INSIDE CORNER
1 1/2" = 1'-0"

NOTES:
1) PROVIDE A BARRIER MEMBRANE OVER THE PARAPET BLOCKING AND INTEGRATE IT WITH THE ROOFING OR DECK WATERPROOFING ASSEMBLY. THIS PROVIDES AIR BARRIER CONTINUITY OVER THE PARAPET AND SECONDARY WEATHER PROTECTION UNDER THE CAP FLASHING.
2) PROVIDE MINIMUM 2.5" (65MM) OVERLAP OF FLASHING OVER FACE OF EIFS. INCREASE OVERLAP WITH BUILDING HEIGHT.
3) CONFIRM COMPATIBILITY OF ROOF MEMBRANE WITH EIFS.

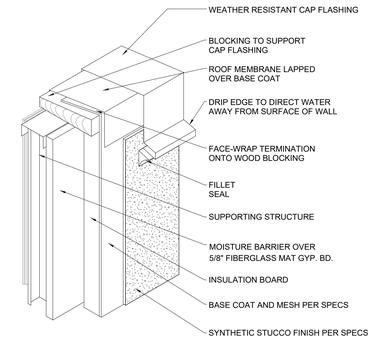

3 EIFS FINISH @ PARAPET CAP
1 1/2" = 1'-0"

NOTES:
1) DETAIL ASSUMES PIPE IS INSTALLED PRIOR TO THE EIFS OR THAT ITS LOCATION HAS BEEN IDENTIFIED.
2) PREPARE AN OPENING IN THE EIFS WITH A JOINT OF 1/2' (13MM) AROUND THE PENETRATION AND PROVIDE SEALANT WITH A CLOSED CELL BACKER ROD. PROVIDE AIR SEAL AROUND THE INTERIOR SIDE OF THE PENETRATION TO PROVIDE AIR SEAL AND TO REDUCE THE PRESSURE DIFFERENCE ACROSS THE OUTSIDE SEALANT.

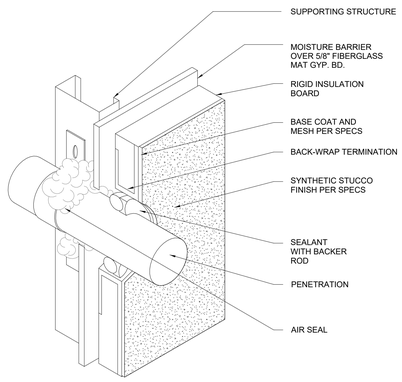

4 EIFS WITH PENETRATION
3" = 1'-0"

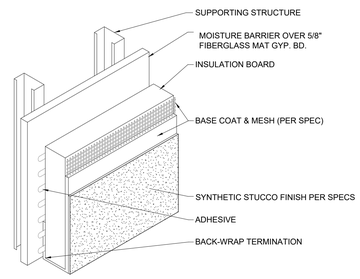

5 TYPICAL EIFS FINISH ASSEMBLY
1 1/2" = 1'-0"

NIXA POLICE DEPARTMENT

305 N LEEANN DR
NIXA, MO 65714

INSPIRIT DESIGN IDeA ARCHITECTS
112 S. Main St., Nixa, MO 65714 Ph: 417-724-8553

CJD Engineering | Energy | Innovation

olsson

METTEMEYER ENGINEERING LLC

Chisdine ARCHITECTS
Architecture / Interior Design / Graphics
1401 S. Brentwood Blvd. / Suite 375 / St. Louis, Missouri 63144
314-725-5080 / ian@chisdine.com

Reissue Date

Professional of Record

STATE OF MISSOURI
NATHAN P. RAPP
NUMBER A-6600
ARCHITECT

DATE _____

Copyright 2025 ©
These prints are the property of the architect and shall be usedonly for the project referenced above

Architect
LMH / NPR

Project #
24-003

Date
2025-06-11

Drawing Title:
EIFS DETAILS

Sheet:
A501

PRINTED: 6/11/2025 11:44:01 AM

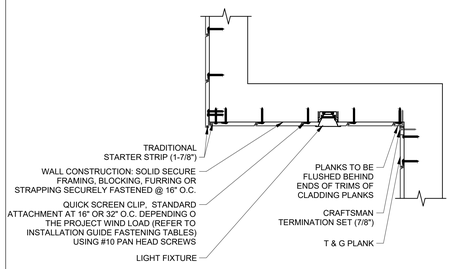

1 HORIZONTAL T&G DETAIL @ PARA. SOFFIT W/ LIGHT FIXTURE
1 1/2" = 1'-0"

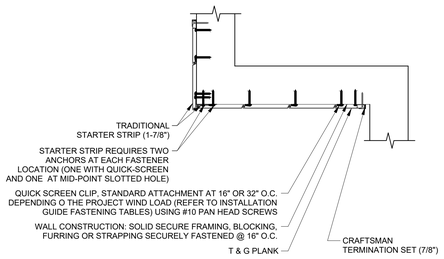

2 T&G DETAIL @ PARA. SOFFIT TO FASCIA TRANSITION
1 1/2" = 1'-0"

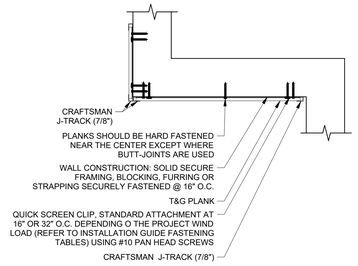

3 T&G DETAIL @ PERP. SOFFIT TO FASCIA TRANSITION
1 1/2" = 1'-0"

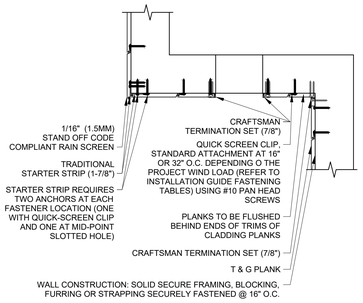

4 HORIZONTAL T&G DETAIL @ PARALLEL SOFFIT W/ OPENING
1 1/2" = 1'-0"

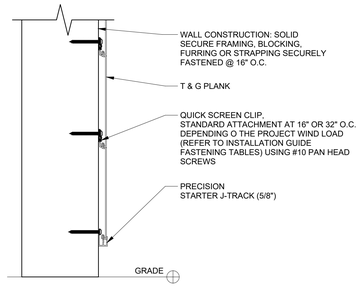

5 HORIZONTAL T&G DETAIL @ PRECISION STARTER J-TRACK
3" = 1'-0"

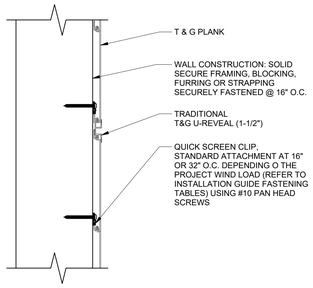

6 HORIZONTAL T&G DETAIL @ TRADITIONAL U-REVEAL
3" = 1'-0"

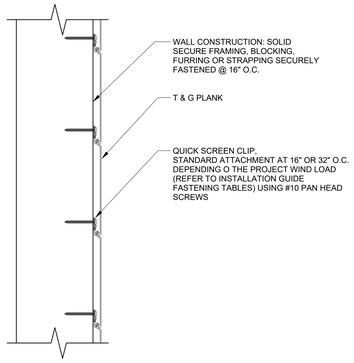

7 HORIZONTAL T&G DETAIL @ MIDDLE OF WALL
3" = 1'-0"

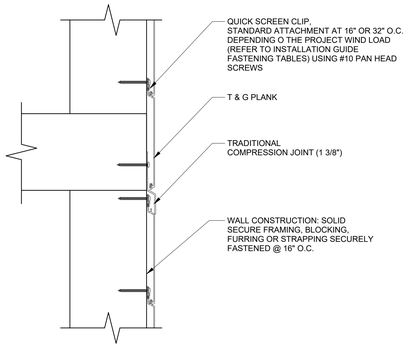

8 HORIZONTAL T&G DETAIL @ COMPRESSION JOINT
3" = 1'-0"

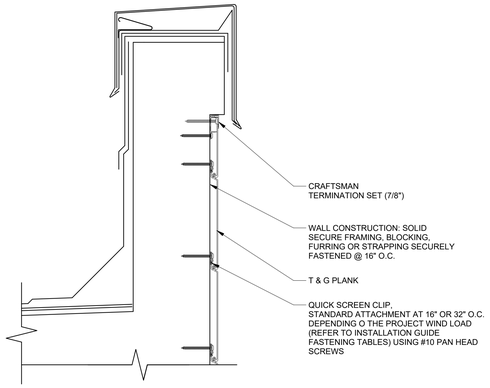

9 HORIZONTAL T&G DETAL @ PARAPET
3" = 1'-0"

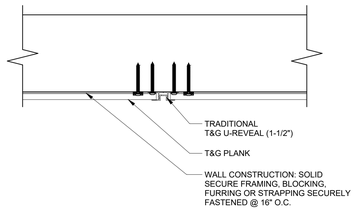

10 HORIZONTAL T&G DETAIL @ TRADITIONAL U-REVEAL SET
3" = 1'-0"

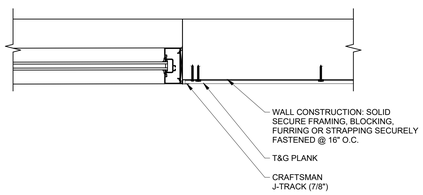

11 HORIZONTAL T&G DETAIL @ WINDOW JAMB
1 1/2" = 1'-0"

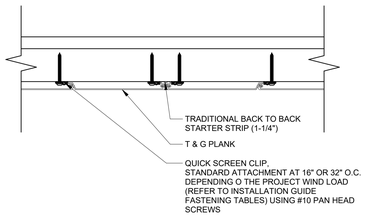

12 T&G DETAIL @ BACK TO BACK STARTER STRIP
3" = 1'-0"

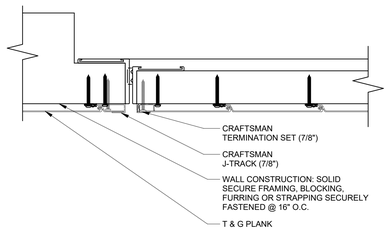

13 HORIZONTAL T&G DETAIL @ SOFFIT ACCESS PANEL
3" = 1'-0"

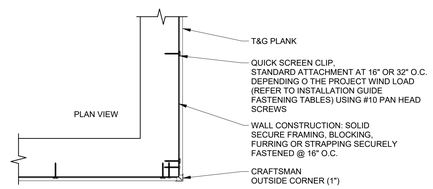

14 HORIZONTAL T&G DETAIL @ OUTSIDE CORNER
1 1/2" = 1'-0"

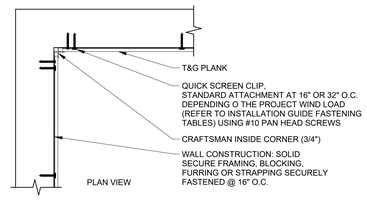

15 HORIZONTAL T&G DETAIL @ INSIDE CORNER
1 1/2" = 1'-0"

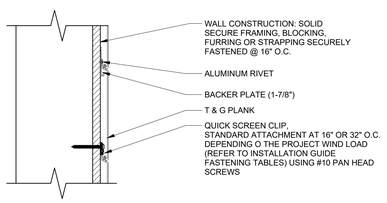

16 HORIZONTAL T&G DETAIL @ BUTT-JOINT
3" = 1'-0"

PRINTED: 6/11/2025 11:44:04 AM

NIXA POLICE DEPARTMENT

305 N LEEANN DR
NIXA, MO 65714

INSPIRE DESIGN iDeA ARCHITECTS
112 S. Main St., Nixa, MO 65714 Ph: 417-724-8553

CJD Engineering | Energy | Innovation

olsson

METTEMEYER ENGINEERING LLC

Chiodini ARCHITECTS
Architecture / Interior Design / Graphics
1401 S. Brentwood Blvd. | Suite #251 St. Louis, Missouri 63144
314-725-0080 | arch@chiodini.com

Reissue Date

Professional of Record

STATE OF MISSOURI
NATHAN P. RAPP
NUMBER A-6000
ARCHITECT

DATE _____

Copyright 2025 ©
These prints are the property of the architect and shall be usedonly for the project referenced above

Architect
LMH / NPR

Project #
24-003

Date
2025-06-11

Drawing Title:
WOOD LOOK METAL PANEL DETAILS

Sheet:
A502

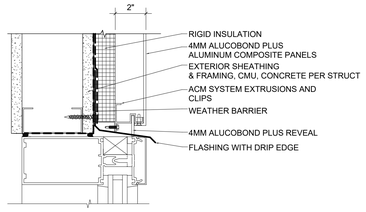

1 ACM PANEL DETAIL (ALUCOBOND) - WINDOW HEAD CONDITION
3" = 1'-0"

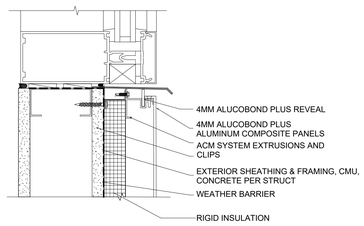

2 T&G DETAIL @ BACK TO BACK STARTER STRIP
3" = 1'-0"

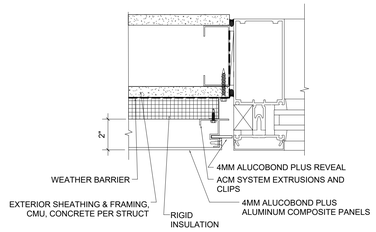

3 T&G DETAIL @ BACK TO BACK STARTER STRIP
3" = 1'-0"

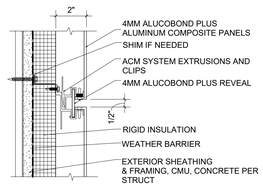

4 T&G DETAIL @ BACK TO BACK STARTER STRIP
3" = 1'-0"

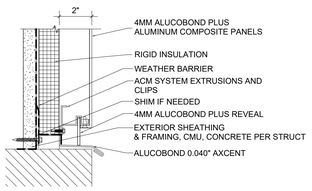

5 T&G DETAIL @ BACK TO BACK STARTER STRIP
3" = 1'-0"

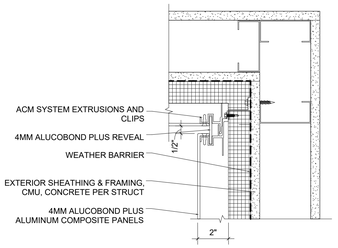

6 T&G DETAIL @ BACK TO BACK STARTER STRIP
3" = 1'-0"

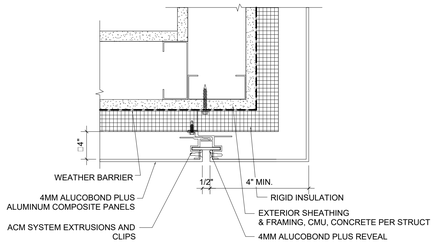

7 T&G DETAIL @ BACK TO BACK STARTER STRIP
3" = 1'-0"

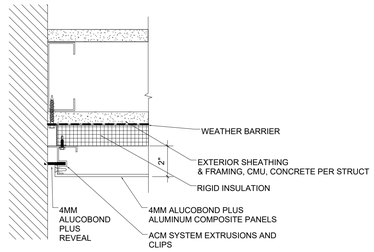

8 T&G DETAIL @ BACK TO BACK STARTER STRIP
3" = 1'-0"

NIXA POLICE DEPARTMENT

305 N LEEANN DR
NIXA, MO 65714

INSIGHT DESIGN IDeA ARCHITECTS
112 S. Main St., Nixa, MO 65714 Ph: 417-724-8553

CJD Engineering | Energy | Innovation

olsson

METTEMEYER ENGINEERING LLC

Chiodini ARCHITECTS
Architecture / Interior Design / Graphics
1401 S. Brentwood Blvd. | Suite #251 St. Louis, Missouri 63144
314-725-0088 | arch@chiodini.com

Reissue Date

Professional of Record

STATE OF MISSOURI
NATHAN P. RAPP
NUMBER
ARCHITECT

DATE _____

Copyright 2025 ©
These prints are the property of the architect and shall be usedonly for the project referenced above

Architect
LMH / NPR

Project #
24-003

Date
2025-06-11

Drawing Title:
FLAT PROFILE METAL PANEL DETAILS

Sheet:
A503

PRINTED: 6/11/2025 11:44:06 AM

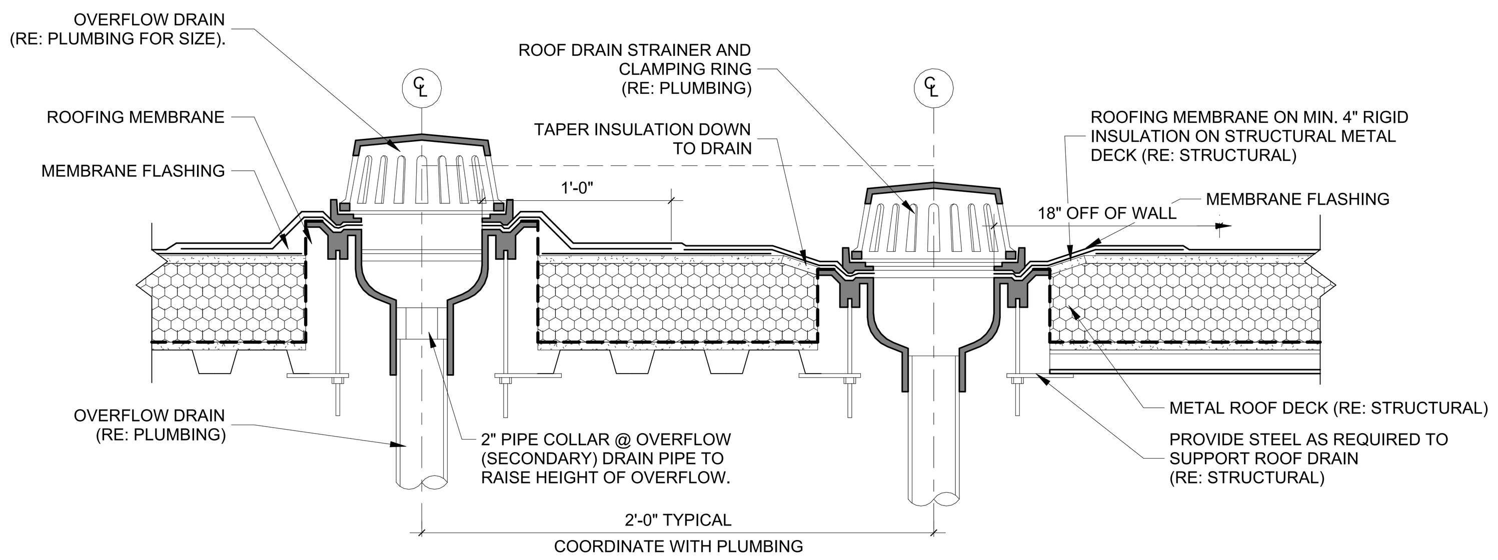

1 ROOF/OVERFLOW DRAIN (TYP)
1 1/2" = 1'-0"

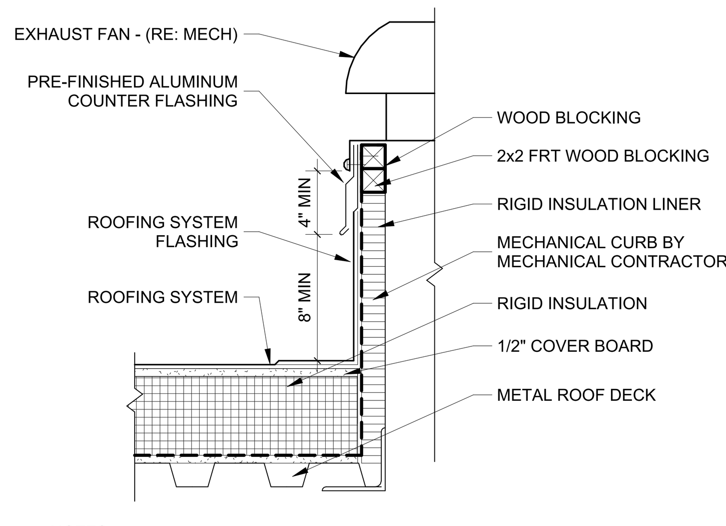

NOTES:
1. USE 24 GAUGE PAINT GRIP GALVANIZED STEEL COUNTER FLASHING ON ALL ROOF VENTS (RV) IN LIEU OF PRE-FINISHED ALUMINUM COUNTERFLASHING
2. EXTEND DUCTWORK AND ELECTRICAL TO ACHIEVE 8" MIN HEIGHT

2 DETAIL - ROOF - EXHAUST FAN
1 1/2" = 1'-0"

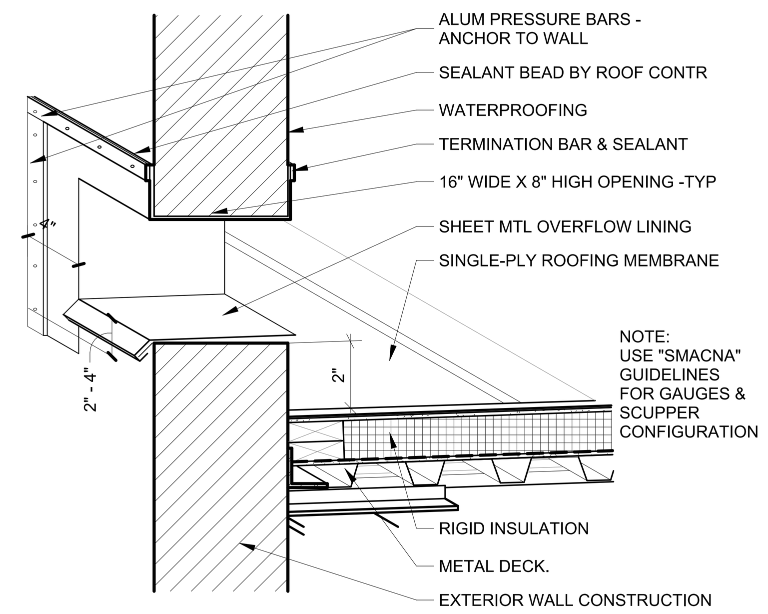

3 OVERFLOW - ISOMETRIC
3/4" = 1'-0"

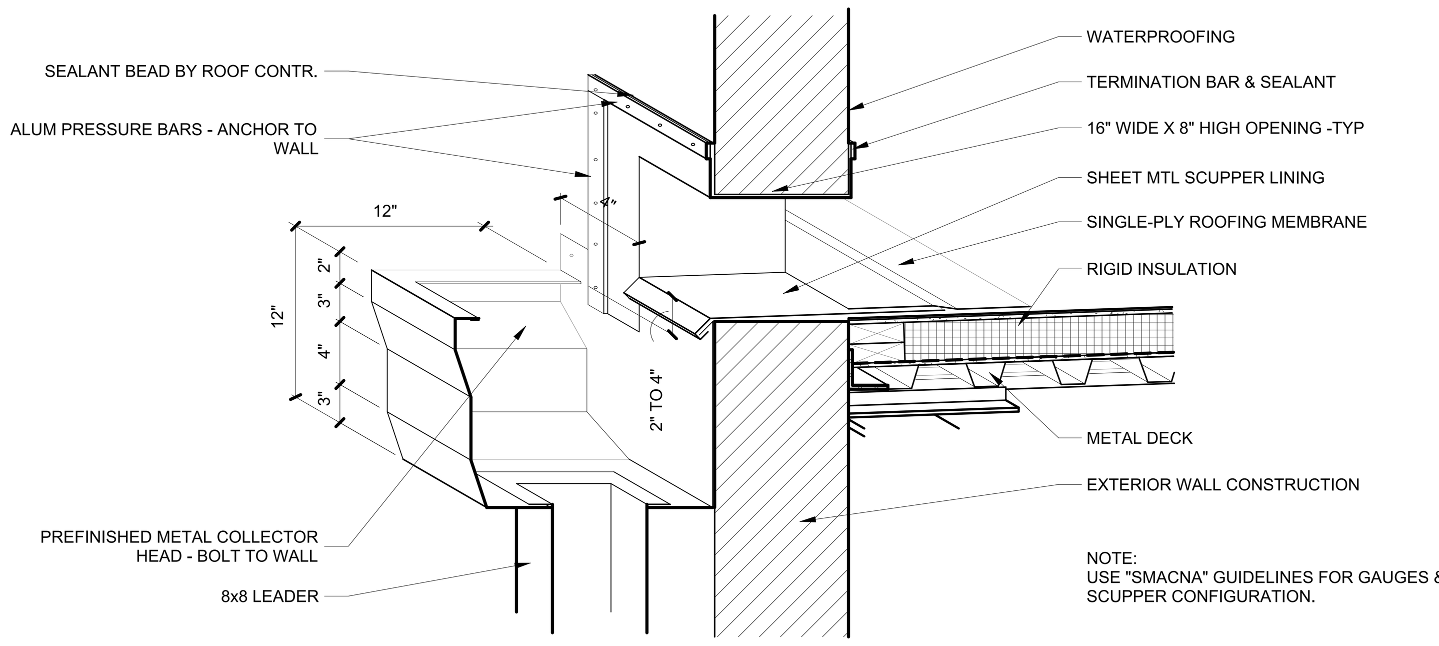

4 SCUPPER - ISOMETRIC
3/4" = 1'-0"

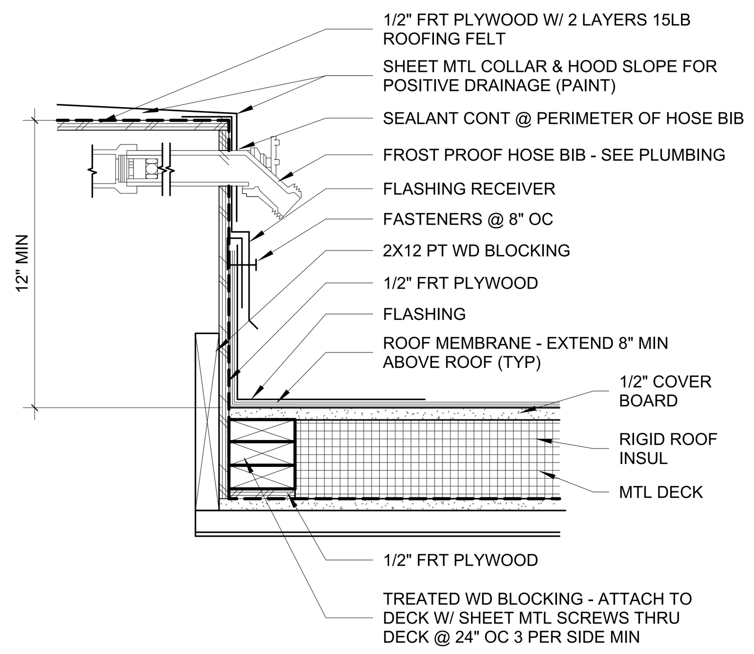

5 ROOF - CURB BOX FOR HOSE BIBS
1 1/2" = 1'-0"

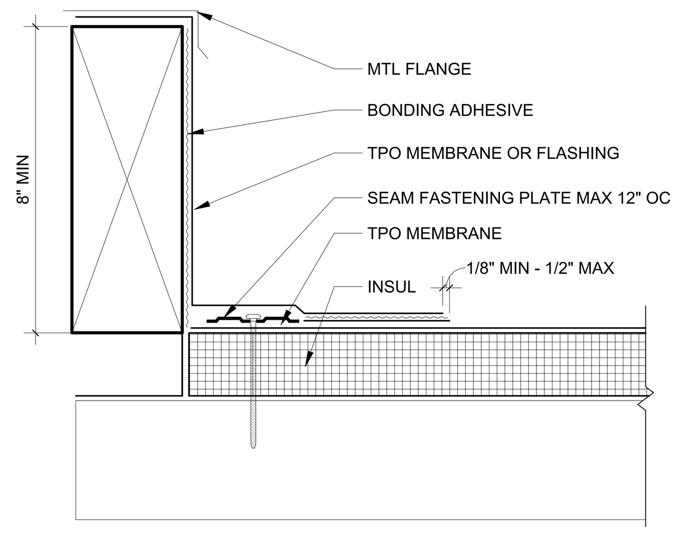

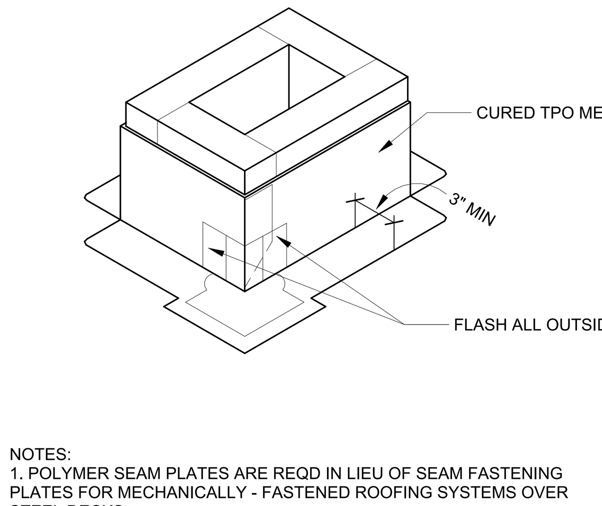

NOTES:
1. POLYMER SEAM PLATES ARE REQD IN LIEU OF SEAM FASTENING PLATES FOR MECHANICALLY - FASTENED ROOFING SYSTEMS OVER STEEL DECKS
2. IF VERTICAL SPLICE IS NOT LOCATED AT CORNER, 6" WIDE PRESSURE - SENSITIVE ELASTOFORM FLASHING MUST BE CENTERED OVER FIELD SPLICE AT ANGLE CHANGE
3. FASTENING PLATES MAY BE INSTALLED VERTICALLY
4. LAP SEALANT IS REQD ON CUT EDGES OF REINFORCED MEMBRANE

6 ROOF - CURB FLASHING
3" = 1'-0"

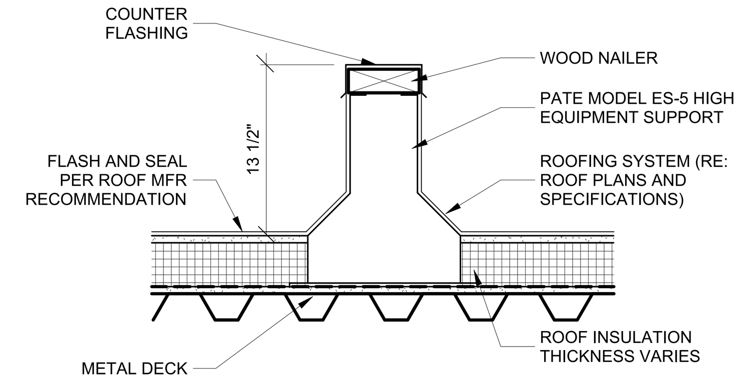

7 ROOF - EQUIPMENT RAIL DETAIL
12" = 1'-0"

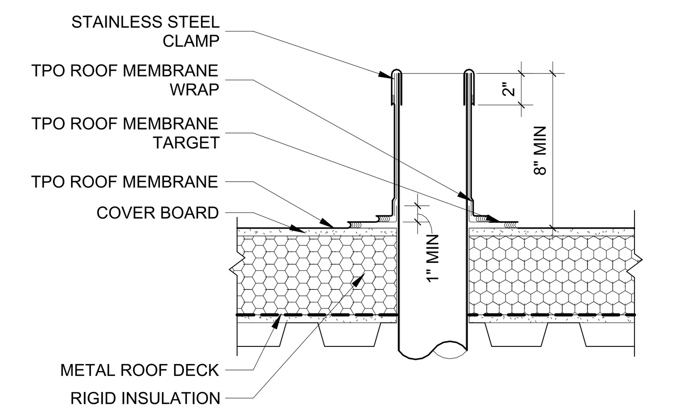

8 ROOF - ROOF PIPE PENETRATION
1 1/2" = 1'-0"

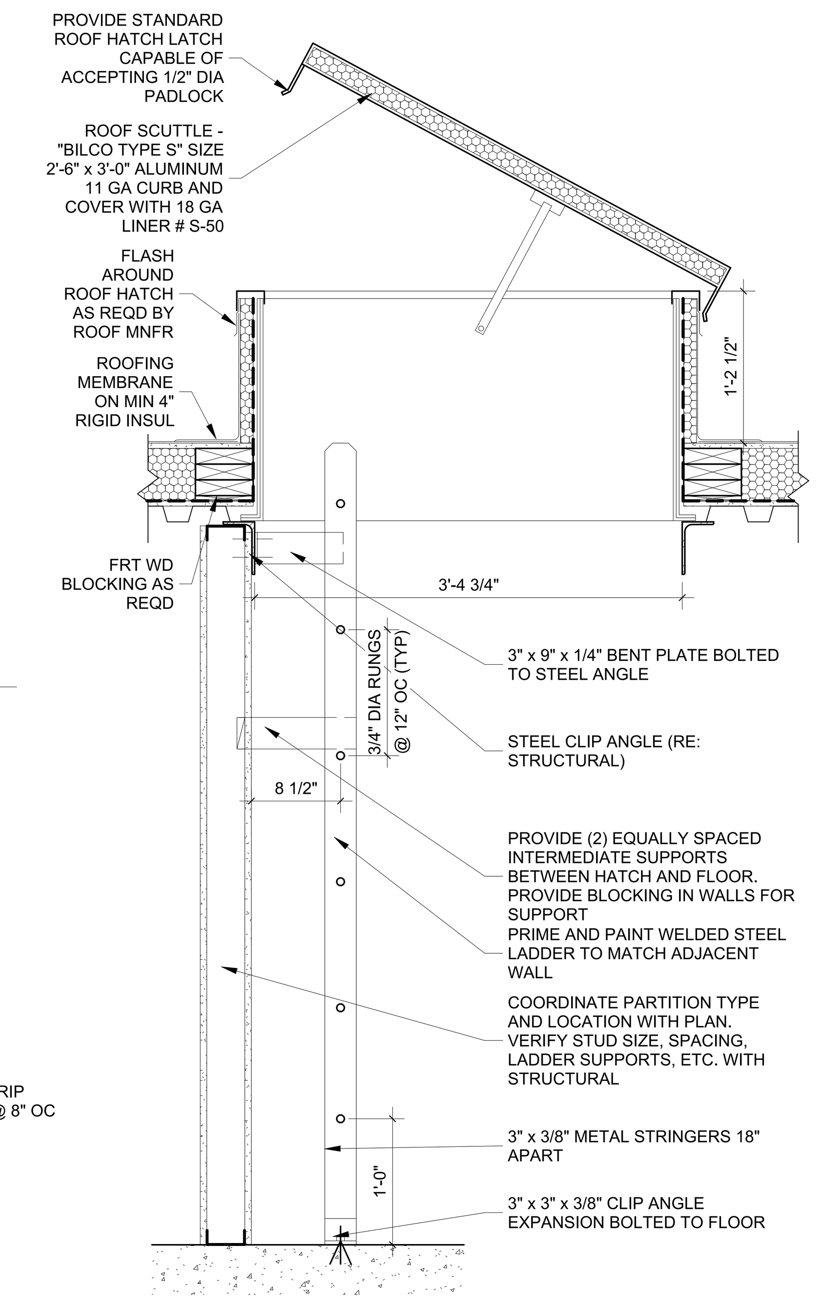

13 ROOF HATCH
1" = 1'-0"

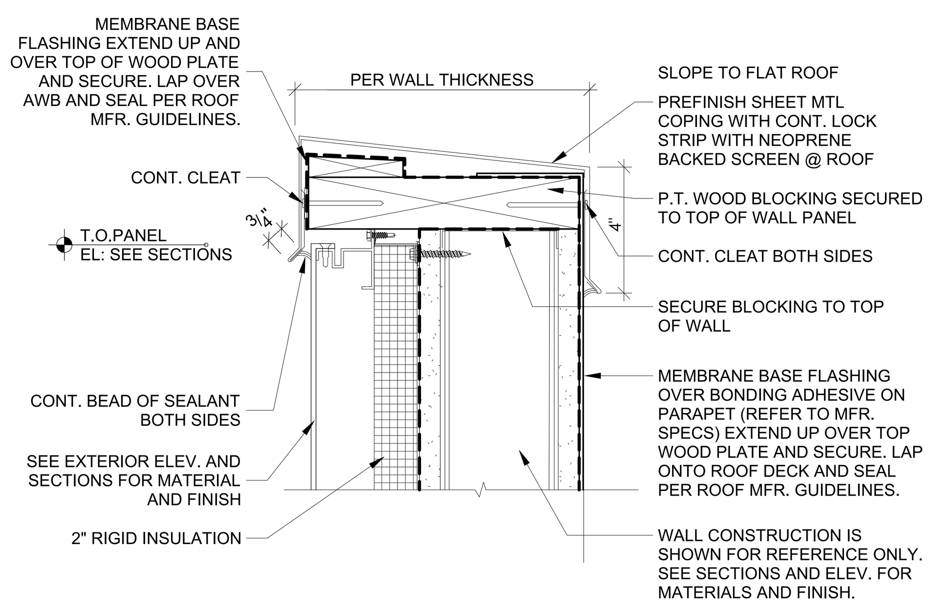

9 ROOF - PARAPET DETAIL CAP DETAIL
3" = 1'-0"

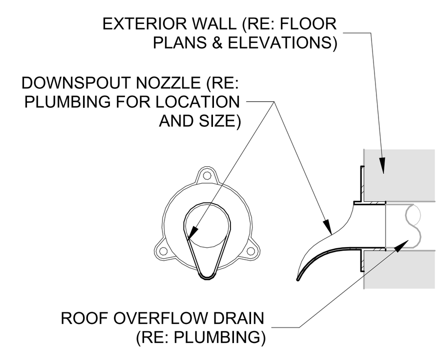

14 OVERFLOW DOWNSPOUT NOZZLE (TYP)
1 1/2" = 1'-0"

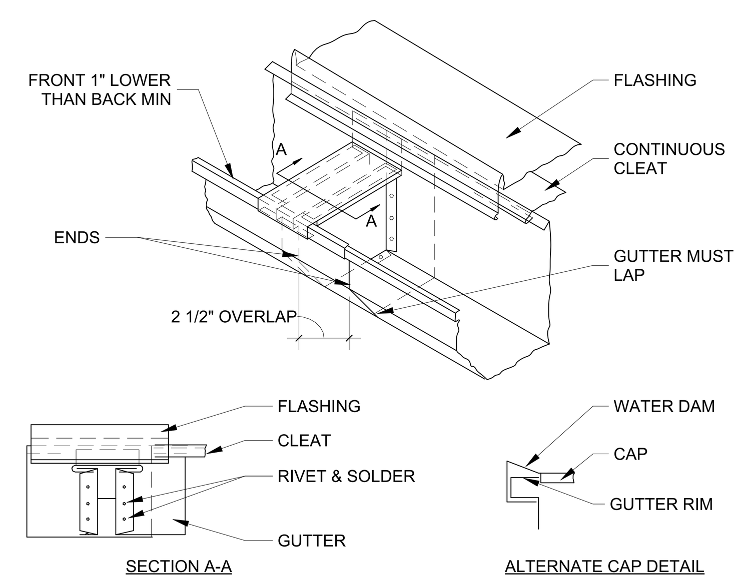

10 ROOF - GUTTER EXPANSION JOINT - SMACNA
1 1/2" = 1'-0"

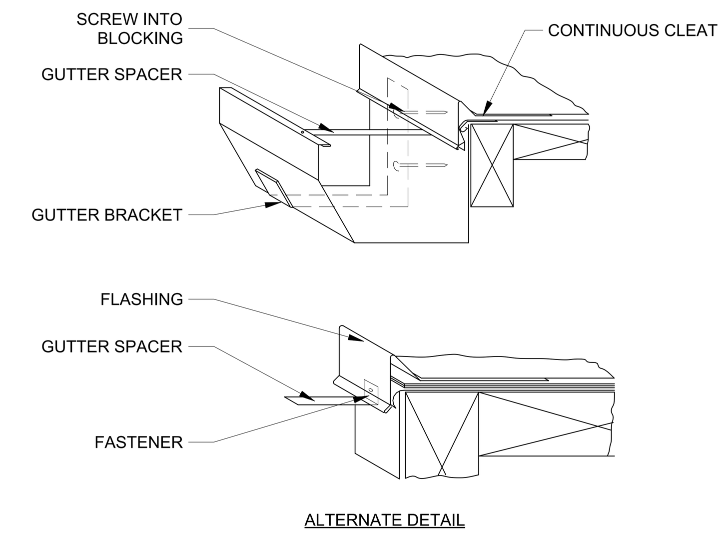

11 ROOF - GUTTER HANGING DETAIL - SMACNA
1 1/2" = 1'-0"

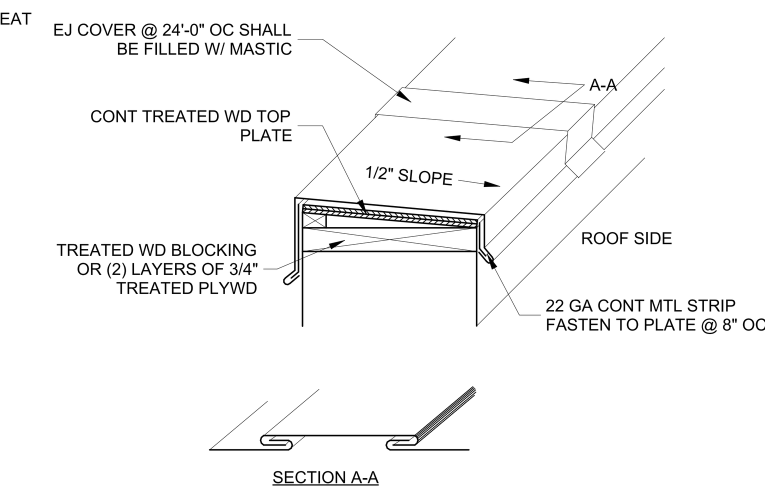

12 ROOF - SHEET METAL COPING EXPANSION JOINT
1 1/2" = 1'-0"

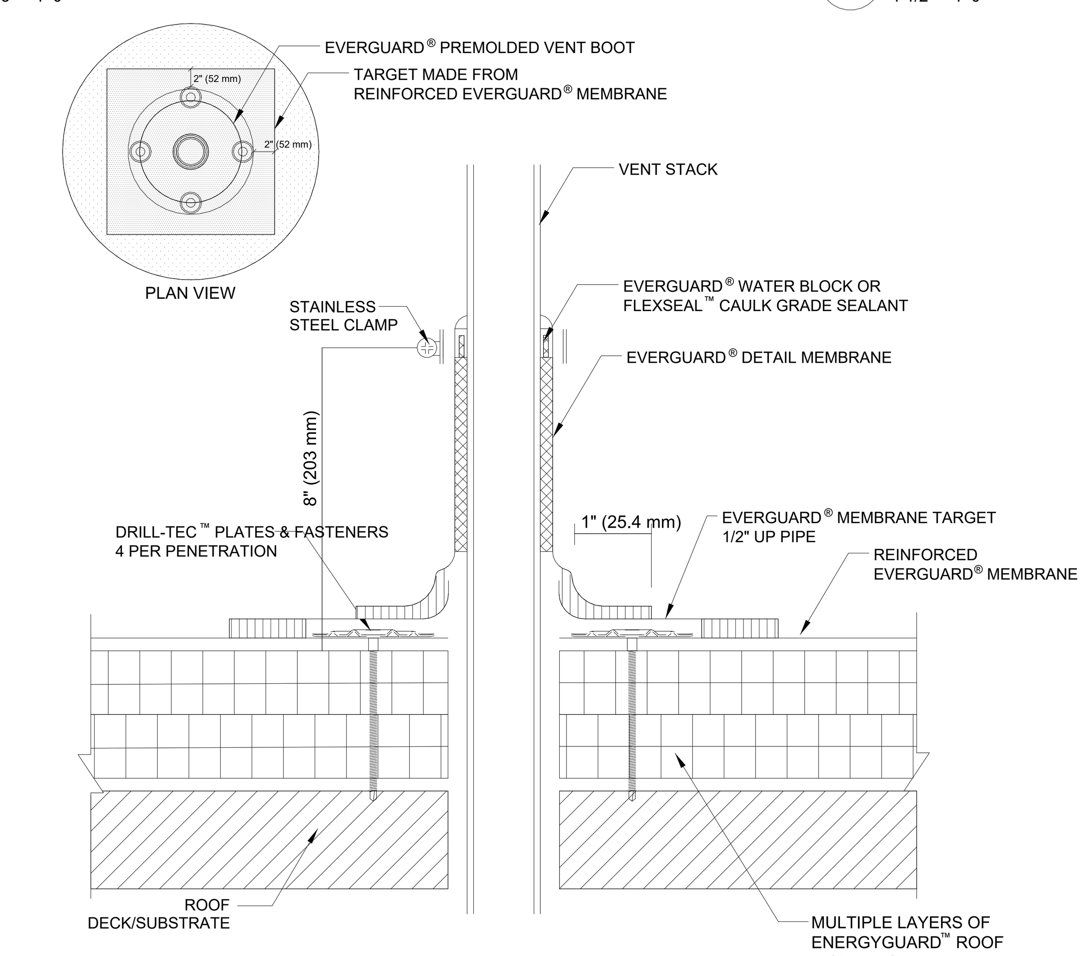

NOTE:
1. FOR INSULATION THICKNESS GREATER THAN 8" (203 mm), A COVER BOARD IS REQUIRED ON MECHANICALLY ATTACHED SYSTEMS ONLY.
2. APPLY HEAT TO UNREINFORCED DETAIL MEMBRANE AND FORM BY HAND PRIOR TO HOT AIR WELDING.

HEAT-WELDED
FLEXSEAL ™ CAULK GRADE SEALANT
EVERGUARD ® BONDING ADHESIVE (OPTIONAL)

15 ROOF - FIELD WRAPPED PENETRATION DETAIL
12" = 1'-0"

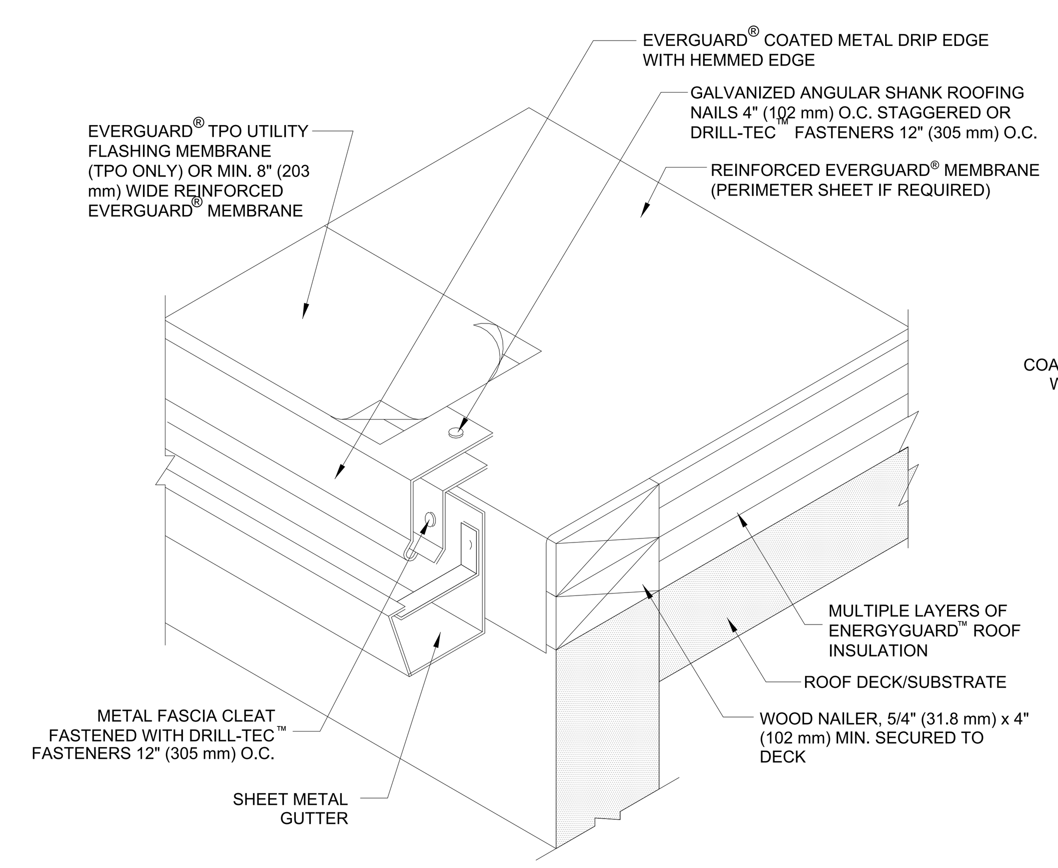

HEAT-WELDED LAP

NOTE:
1. REFER TO EVERGUARD® DETAIL 204 FOR COATED METAL JOINTS.
2. A CONTINUOUS METAL CLEAT IS REQUIRED.
3. 25-YEAR GUARANTEES AND ABOVE MUST USE EXTREME ACCESSORIES.
4. FOR HEAT-WELDING LAPS USE 1.5" (38.1 mm) WELD WITH MACHINE AUTOMATIC WELDER AND 2" (50.8 mm) WELD WITH HAND WELDER.

16 ROOF - WALL EDGE FLASHING W/ METAL EDGING
12" = 1'-0"

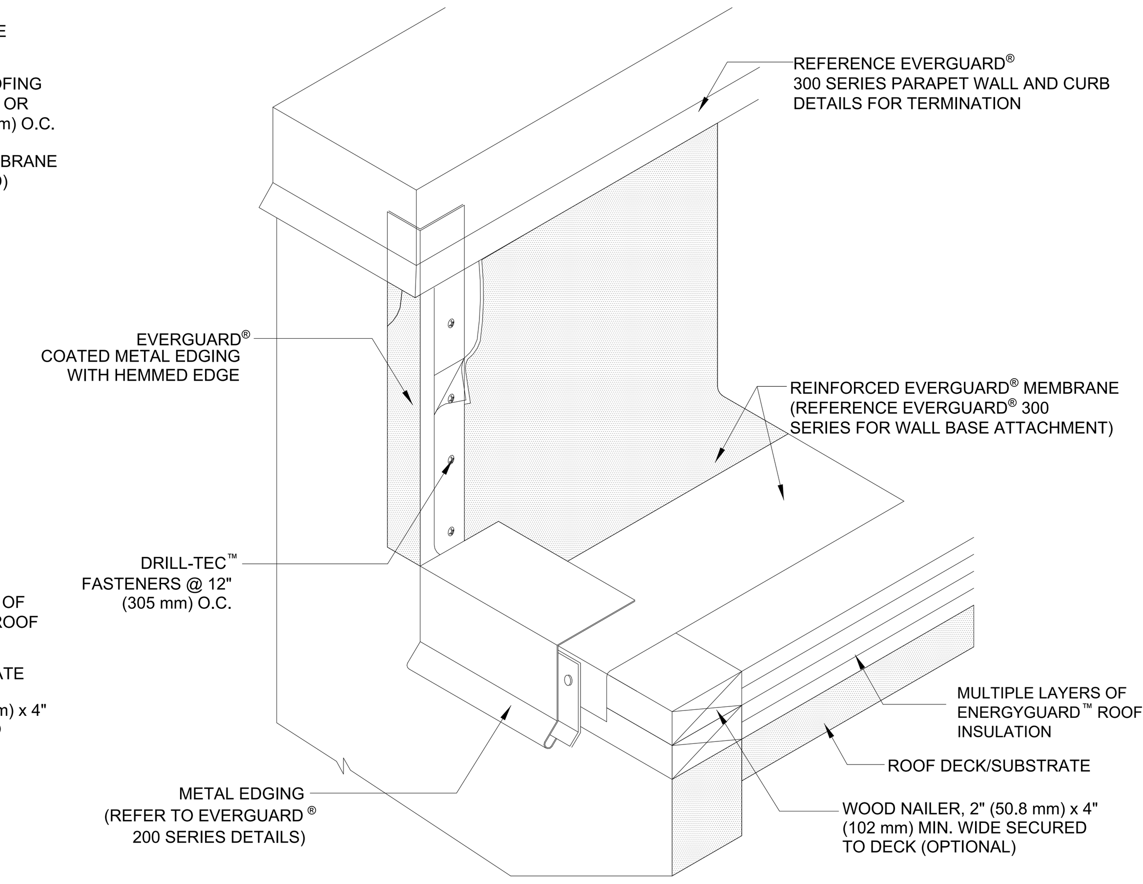

NOTE:
1. FOR INSULATION THICKNESS GREATER THAN 8" (203 mm), A COVER BOARD IS REQUIRED ON MECHANICALLY FASTENED SYSTEMS ONLY.
2. IF EVERGUARD® FREEDOM MEMBRANE IS USED, BONDING ADHESIVE IS NOT NEEDED AND WALL MUST BE PRIMED.

HEAT-WELDED
FLEXSEAL™ CAULK GRADE SEALANT

17 ROOF - GUTTER W/ COATED METAL EDGE DETAIL
12" = 1'-0"

FLASHING KEY
• 30" - 66" (762 mm -1.68 m) REQUIRES BONDING ADHESIVE
• UP TO 30" (762 mm) DRY HUNG

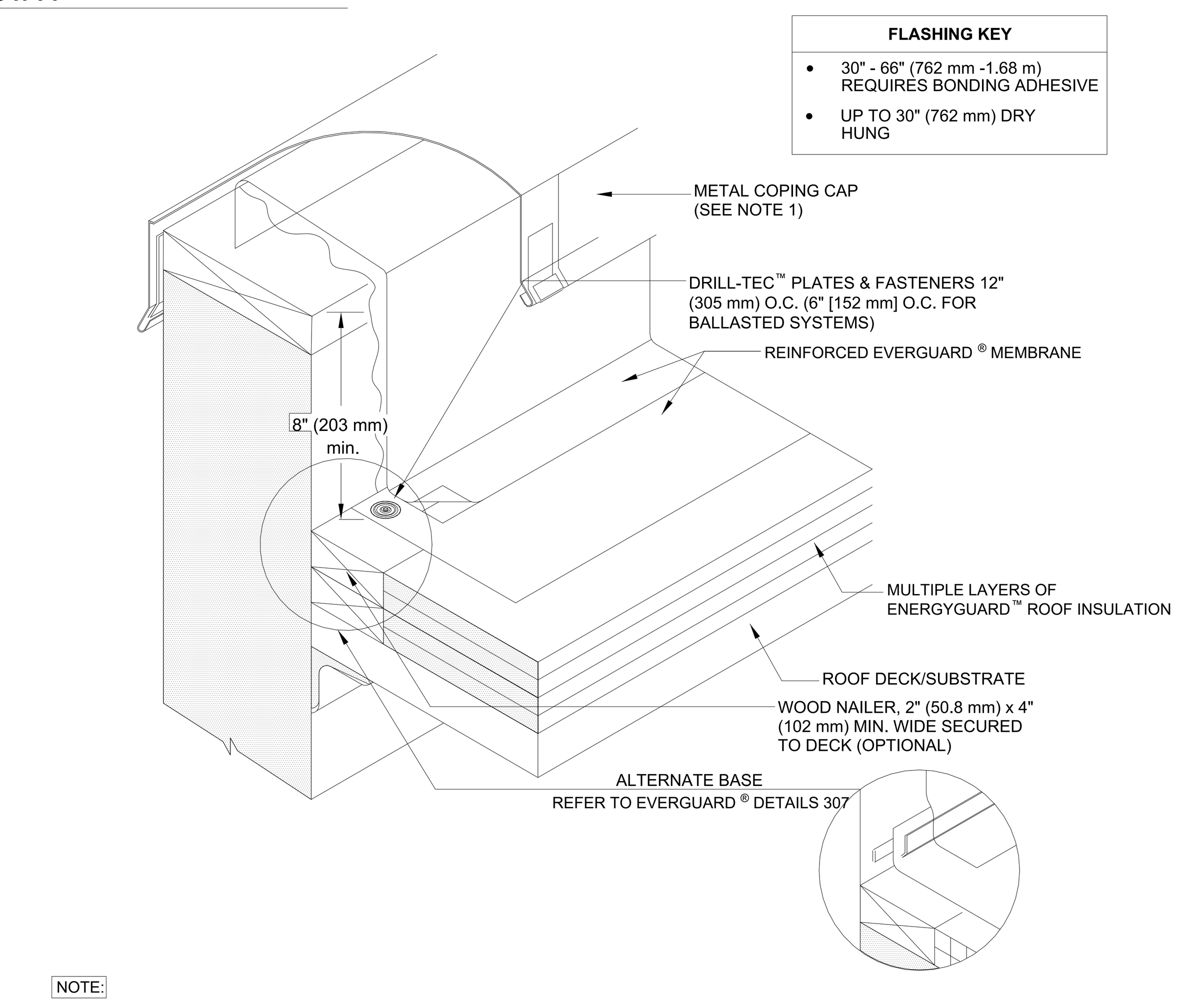

NOTE:
1. PERIMETER EDGE METAL SHOULD BE DESIGNED FOR WIND RESISTANCE IN ACCORDANCE WITH THE APPLICABLE EDITION OF ASCE 7 AND TESTED FOR RESISTANCE IN ACCORDANCE WITH THE TEST METHODS IN THE APPLICABLE EDITION OF ANSI/SPRI ES-1.
2. FOR INSULATION THICKNESS GREATER THAN 8" (203 mm), A COVER BOARD IS REQUIRED ON MECHANICALLY FASTENED SYSTEMS ONLY.
3. IF EVERGUARD® FREEDOM MEMBRANE IS USED, BONDING ADHESIVE IS NOT NEEDED AND WALL MUST BE PRIMED.

HEAT-WELDED
EVERGUARD ® BONDING ADHESIVE

18 ROOF - WALL FLASHING W/ COPING CAP
12" = 1'-0"

NIXA POLICE DEPARTMENT
305 N LEEANN DR
NIXA, MO 65714

INSIGHT DESIGN IDeA ARCHITECTS
112 S. Main St., Nixa, MO
65714 Ph: 417-724-8553

CJD Engineering | Energy | Innovation

olsson

METTEMEYER ENGINEERING LLC

Chiodini ARCHITECTS
Architecture / Interior Design / Graphics
1401 S. Brentwood Blvd. / Suite 575 / St. Louis, Missouri 63144
314-725-5588 / arch@chiodini.com

Reissue Date

Professional of Record

STATE OF MISSOURI
NATHAN P. RAPP
NUMBER A-2008000201
ARCHITECT

DATE 2025-06-11

Copyright 2025 ©
These prints are the property of the architect and shall be usedonly for the project referenced above

Architect
LMH / NPR

Project #
24-003

Date
2025-06-11

Drawing Title:
ROOF DETAILS

Sheet:
A510

PRINTED: 6/11/2025 11:44:09 AM

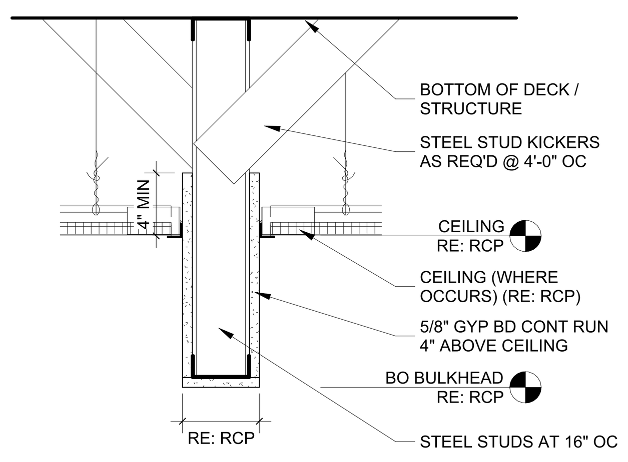

1 BULKHEAD - TYP.
1 1/2" = 1'-0"

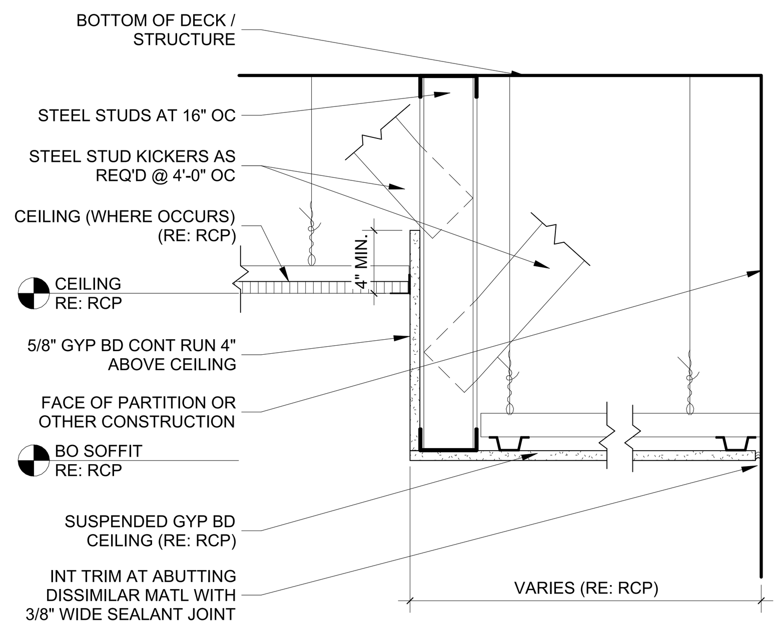

2 CEILING DETAIL - CEILING / SOFFIT
1 1/2" = 1'-0"

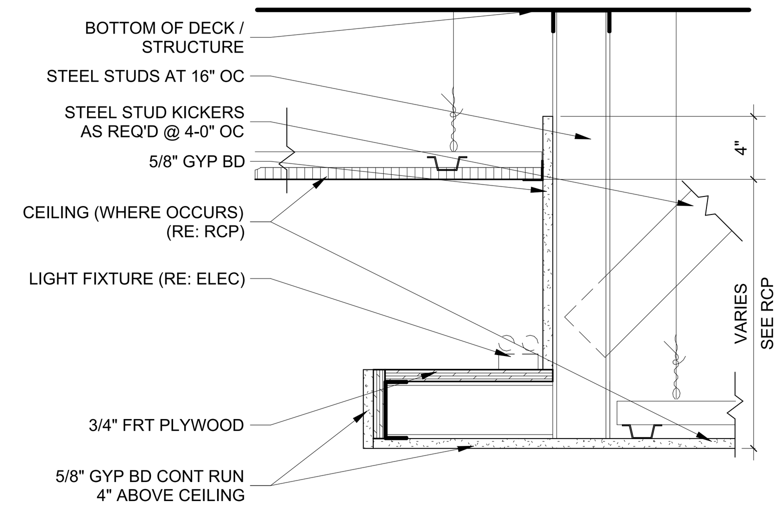

3 CEILING DETAIL - LIGHT COVE @ GYP BD
1 1/2" = 1'-0"

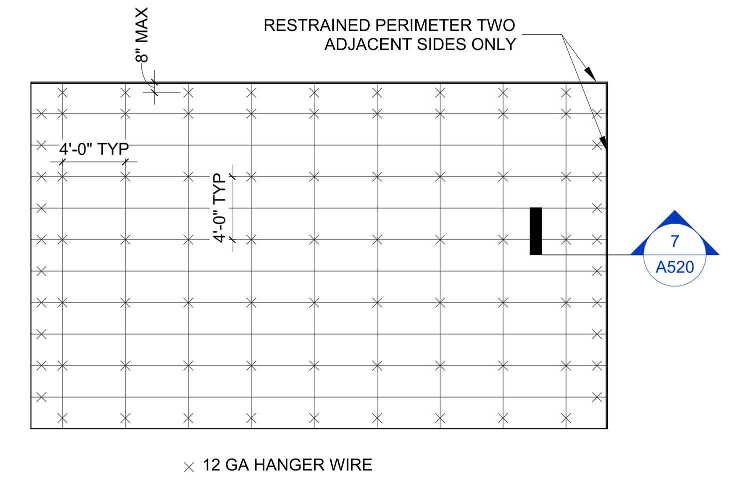

4 SEISMIC - TYPICAL REFLECTED CEILING PLAN IBC CATEGORY D, E & F SUSPENSION
1/8" = 1'-0"

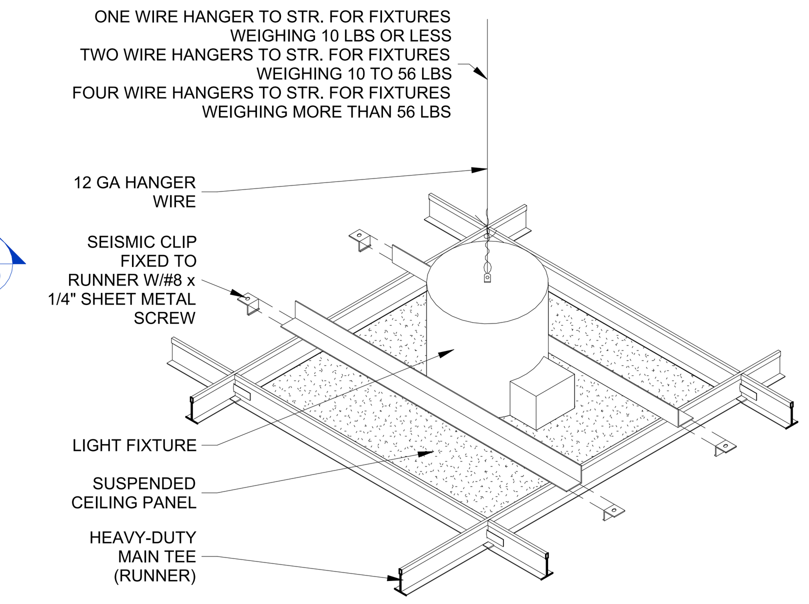

5 SEISMIC - DOWNLIGHT SUSPENSION
1 1/2" = 1'-0"

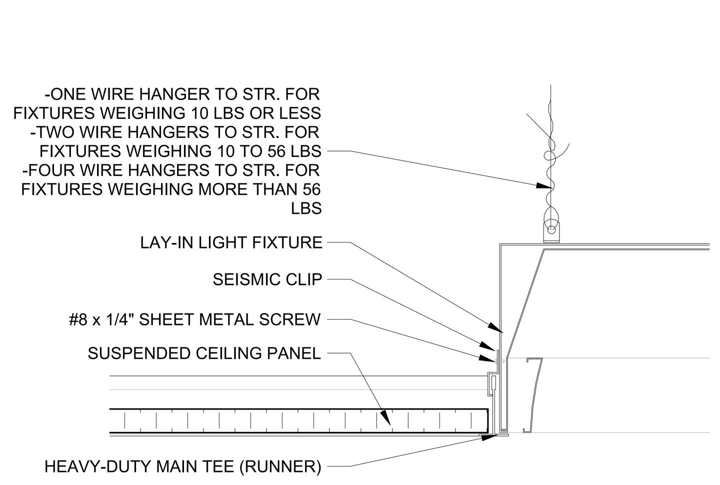

6 SEISMIC - LAY-IN LIGHT DETAIL - IBC CATEGORY D, E & F
3" = 1'-0"

THE MAIN RUNNERS AND CROSS RUNNERS OF THE CEILING SYSTEM AND THEIR SPLICES, INTERSECTION CONNECTORS, AND EXPANSION DEVICES SHALL BE DESIGNED AND CONSTRUCTED TO CARRY A MEAN ULTIMATE TEST LOAD OF NOT LESS THAN 180 LBS OR TWICE THE ACTUAL LOAD, WHICHEVER IS GREATER.

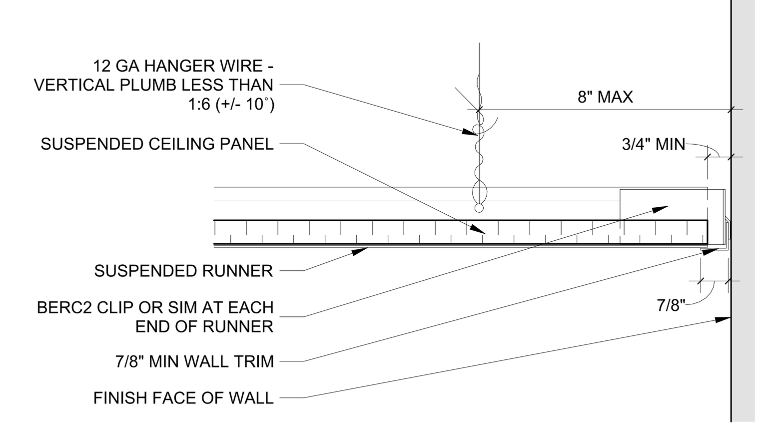

7 SEISMIC - WALL DETAIL @ RESTRAINED END - IBC CAT. D, E & F
3" = 1'-0"

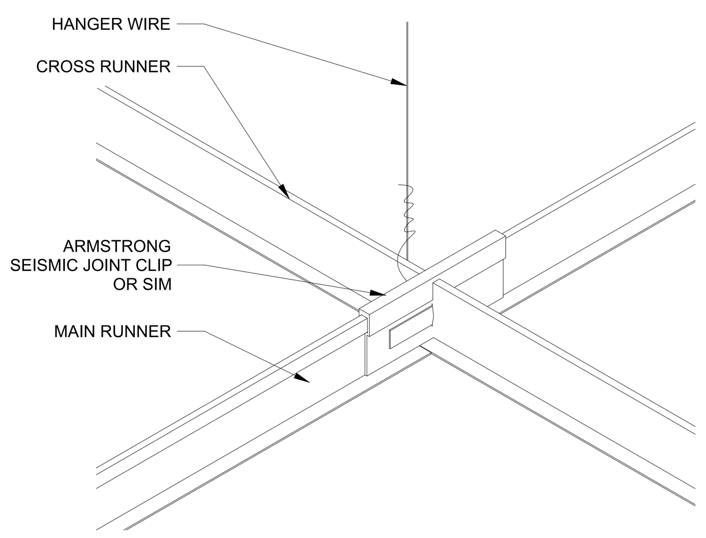

8 SEISMIC - SEPARATION JOINT DETAIL
3" = 1'-0"

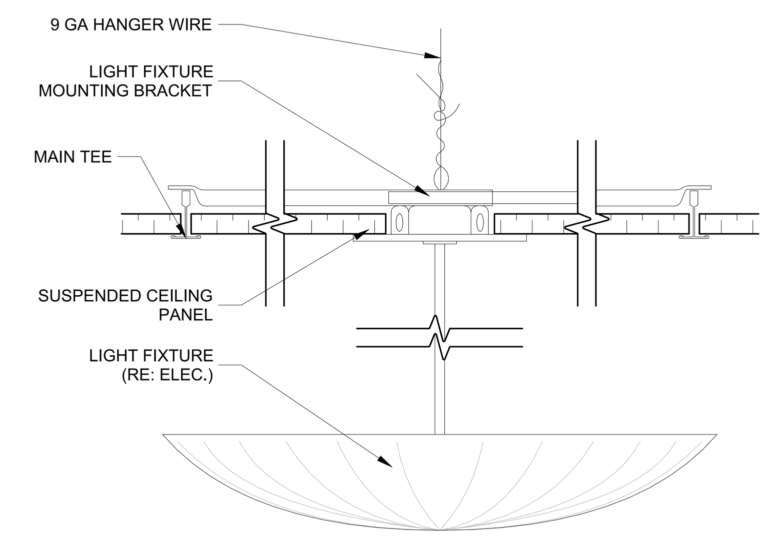

9 SEISMIC - TYP PENDANT LIGHT DETAIL - IBC CATEGORY D, E & F
3" = 1'-0"

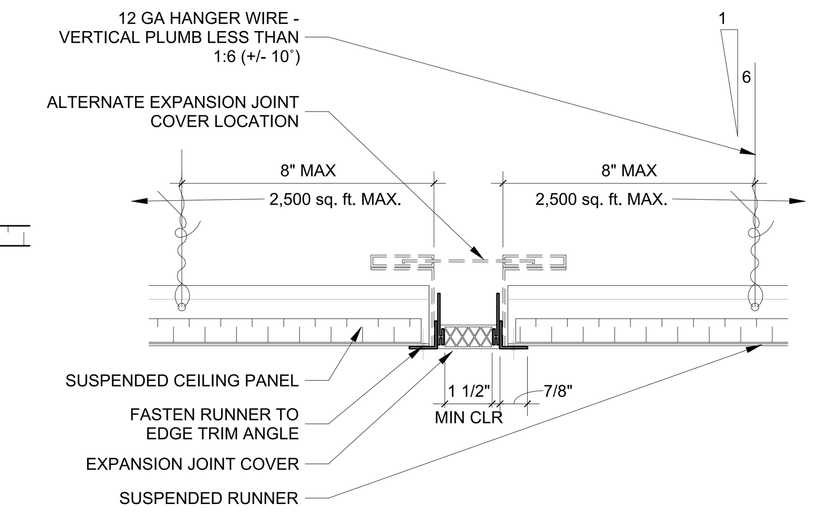

10 SEISMIC - TYP SEPARATION JOINT DETAIL
3" = 1'-0"

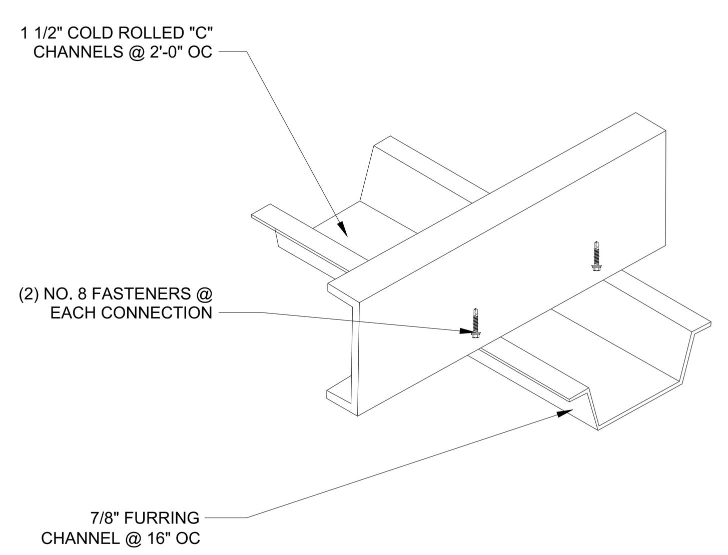

12 SADDLE TIE DETAIL
3" = 1'-0"

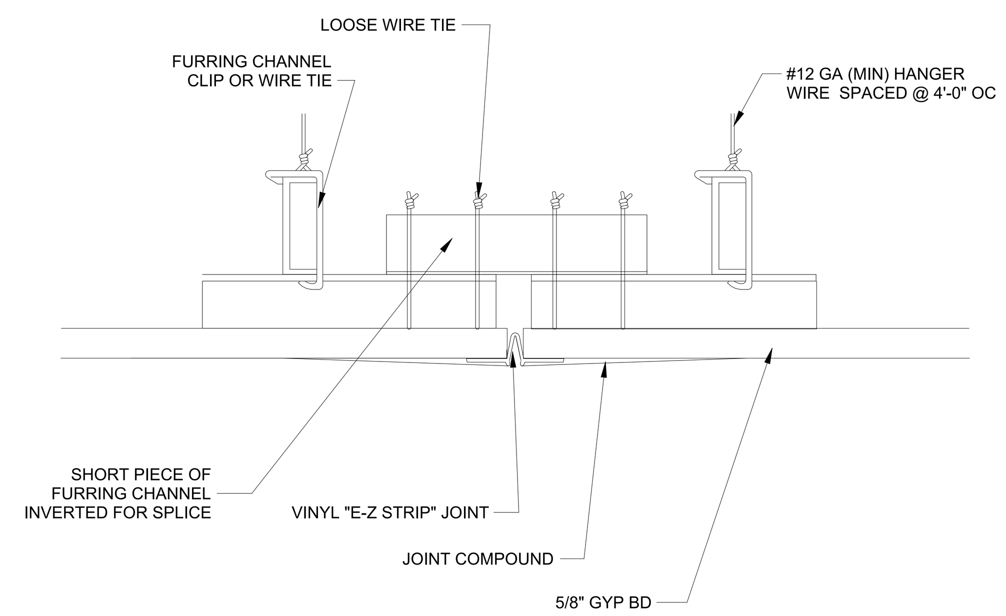

14 CTRL JNT PERP TO CHANNEL
3" = 1'-0"

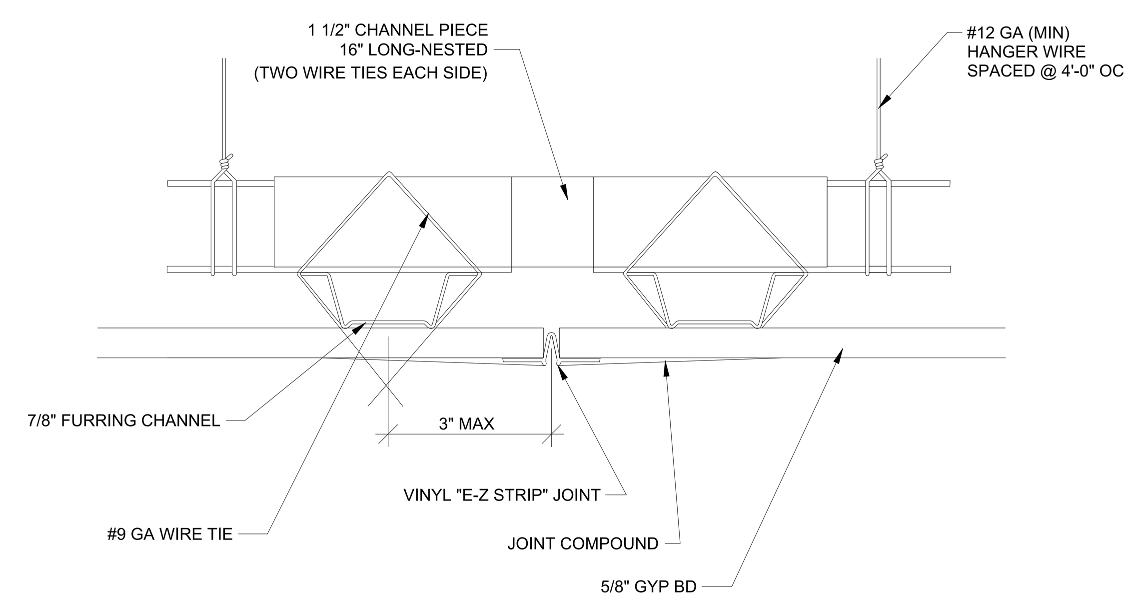

13 CTRL JNT PARALLEL TO CHANNEL
3" = 1'-0"

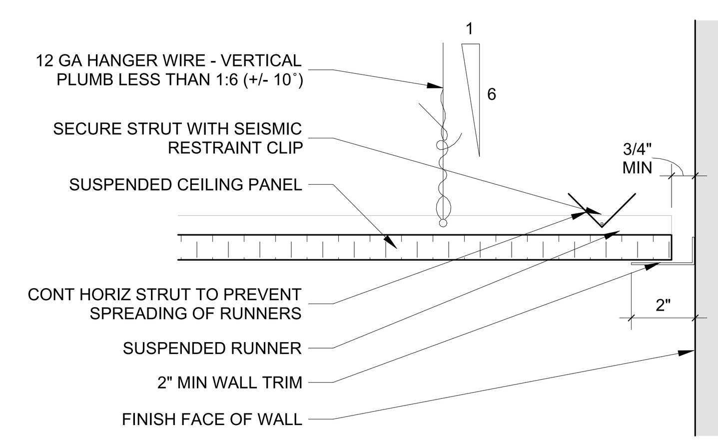

11 SEISMIC - TYP WALL DETAIL @ UNRESTRAINED END - IBC CATEGORY D, E & F
3" = 1'-0"

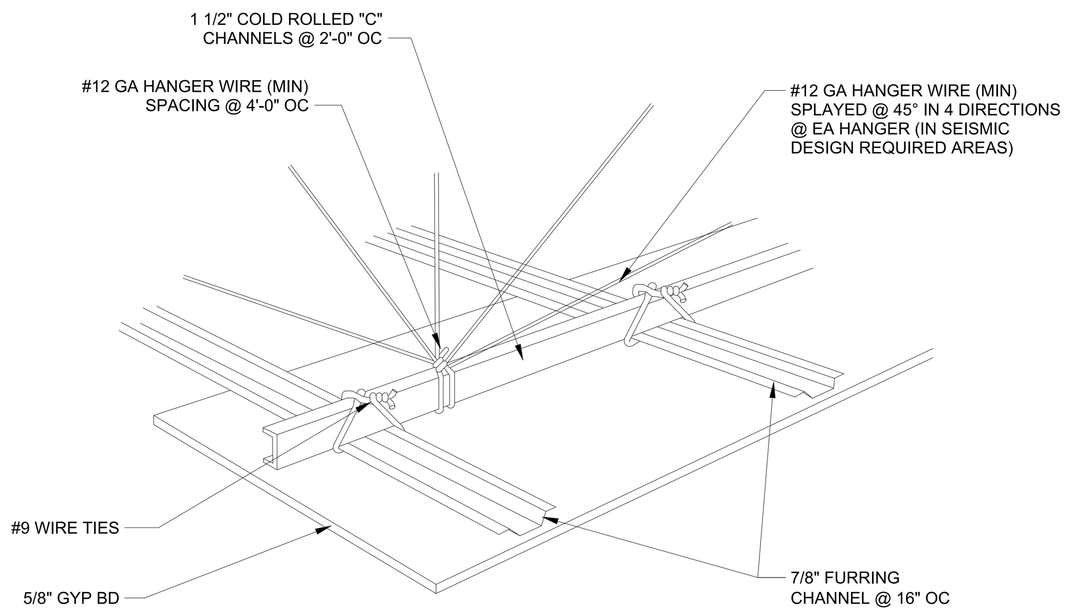

15 GYP. BD. CEILING SUPPORT
3" = 1'-0"

SEISMIC CEILING NOTES:

A. ACOUSTIC CEILING TILE (ACT) HEIGHTS ARE TO FACE OF TILE, UNLESS NOTED OTHERWISE.
B. ALL EXPOSED METAL DECK, STEEL BAR JOISTS, BEAMS, ANGLES, CONDUITS, JUNCTION BOXES, DUCTWORK, ETC. ARE TO BE PAINTED, UNLESS NOTED OTHERWISE.
C. COORDINATE REFLECTED CEILING PLAN LIGHT FIXTURE LOCATIONS WITH ELECTRICAL DRAWINGS. REPORT DISCREPANCIES AND CONFLICTS FOR ARCHITECT RESOLUTION PRIOR TO INSTALLATION.
D. LIGHT FIXTURE LOCATIONS ARE TO BE COORDINATED WITH FINAL FURNITURE PLANS. COORDINATE WITH ARCHITECT
E. SPRINKLER HEADS TO BE MOUNTED IN THE CENTER OF A 2x2 ACOUSTIC CEILING TILE (ACT) OR IMPLIED 2x2 CENTER OF HALF A 2x4 TILE, UNLESS NOTED OTHERWISE.

DESIGN BUILD DELIVERY

A. LIGHTING PHOTOMETRICS AND EXACT FIXTURE QUANTITIES ARE THE RESPONSIBILITY OF THE DESIGN CONTRACTOR. COORDINATE WITH ARCHITECT PRIOR TO INSTALLATION.
B. DUCTWORK ROUTING AND DEVICES, DIFFUSERS, REGISTERS, GRILLES, ETC LOCATIONS ARE THE RESPONSIBILITY OF THE DESIGN CONTRACTOR. COORDINATE WITH ARCHITECT PRIOR TO INSTALLATION.

GENERAL SEISMIC LAY-IN SUSPENDED CEILING NOTES:

A. CODE REFERENCE STANDARDS: ASCE7, ASTM C636 AND ASTM E580.
B. CISCA SEISMIC CONSTRUCTION HANDBOOK FOR REFERENCE ONLY.
C. THE FOLLOWING IS A SUMMERY OF THE REQUIREMENTS OF THE REFERENCED CODE AND STANDARDS.
D. THE CONTRACTOR IS RESPONSIBLE FOR INSTALLATION IN ACCORDANCE WITH REFERENCED CODE AND STANDARDS, AND TO MAINTAIN A CODE AND STANDARDS REFERENCE ONSITE FOR REVIEW.
E. INTERNATIONAL BUILDING CODE (IBC) ALLOWS FOR THE USE OF PROPRIETARY ALTERNATES TESTED TO ESR 3336.
F. INTERNATIONAL BUILDING CODE (IBC) SEISMIC DESIGN CATEGORIES A AND B INSTALL PER ASTM C636 REQUIREMENTS.

SEISMIC DESIGN CATEGORY D, E AND F - LAY-IN CEILING

A. PROVIDE A 2" PERIMETER CLOSURE ANGLE WITH THE GRID CONNECTED TO THE ANGLE ON TWO ADJACENT SIDES AND UNATTACHED ON TWO ADJACENT SIDES. A MINIMUM CLEARANCE OF **3/4**" MUST BE MAINTAINED ON THE TWO UNATTACHED ADJACENT SIDES.
B. UNATTACHED PERIMETER RUNNER ENDS MUST BE TIED TOGETHER TO PREVENT SPREADING.
C. PERIMETER RUNNERS MUST BE SUPPORTED BY VERTICAL HANGER WIRES NOT MORE THAN 8" FROM THE WALL.
D. GRID MEMBERS MUST BE HEAVY DUTY LOAD RATING AS DEFINED IN ASTM C635.
E. GRID CONNECTIONS 180 LB. MINIMUM STRENGTH FOR MAIN RUNNER SPLICES AND CROSS RUNNER INTERSECTIONS.
F. VERTICAL SUSPENSION WIRES: NO. 12 GAGE WIRE MIN. AT 4'-0" MAX. O. C. EACH WAY. CONNECTIONS TO SUPPORTING STRUCTURE MUST BE CAPABLE OF CARRYING 90 LB. VERTICAL HANGER WIRES MUST BE STRAIGHT AND SHALL NOT USE BENDS OR LOCALIZED KINKS FOR LEVELING.
G. WIRES MAY NOT ATTACH TO OR BEND AROUND INTERFERING EQUIPMENT.
H. FIELD-TIED CONNECTIONS, VERTICAL HANGER WIRES MUST BE SHARPLY BENT AND WRAPPED WITH THREE TURNS IN THREE INCHES OR LESS.
I. LATERAL FORCE BRACING: REQUIRED FOR ALL CEILINGS GREATER THAN 1000 SQUARE FEET. SHALL CONSIST OF FOR SPLAY WIRES, OR RIGID GRACING ACCOMPANIED BY A COMPRESSION POST LOCATED AT 12'-0" O. C. EACH WAY STARTING AT 6'-0" FROM TWO ADJACENT WALLS. THE BRACING CONNECTION STRENGTH SHALL BE 250LB. MIN.
J. SPRINKLER HEADS AND OTHER PENETRATIONS SHALL HAVE A MIN. OF 1" CLEAR SPACE IN ALL DIRECTIONS.
K. AN ALTERNATE TO PROVIDING LARGE CLEARANCES AROUND SPRINKLER SYSTEM PENETRATIONS THROUGH CEILINGS, THE SPRINKLER SYSTEM AND CEILING GRID MAY BE TIED TOGETHER AS AN INTEGRAL UNIT. THE CEILING SHALL BE DESIGNED BY A DESIGN PROFESSIONAL AND SHALL CONSIDER THE MASS AND FLEXIBILITY OF ALL ELEMENTS; CEILING, SPRINKLER SYSTEM LIGHT FIXTURES AND MECHANICAL.
L. PARTITIONS MUST BE INDEPENDENT OF THE CEILING.
M. FOR CEILINGS GREATER THAN 2,500 SQ. FT., DIVIDE THE CEILING INTO AREAS LESS THAN OR EQUAL TO 2,500 SQ. FT. THE DIVIDED CEILING SUBSECTION MUST NOT EXCEED A RATIO OF 4:1 FOR LONG SIDE TO THE SHORT SIDE. ALLOW FOR 3/4" MOVEMENT.

SEISMIC DESIGN CATEGORY D, E AND F - LIGHT FIXTURES

A. LIGHT FIXTURES MUST BE POSITIVELY ATTACHED TO THE GRID BY AT LEAST TWO CONNECTIONS, EACH CAPABLE OF SUPPORTING THE WEIGHT OF THE FIXTURE.
A. SURFACE-MOUNTED LIGHT FIXTURES SHALL BE POSITIVELY CLAMPED TO THE GRID.
A. RIGID CONDUIT IS NOT PERMITTED FOR THE ATTACHMENT OF FIXTURES.
B. REQUIRED SUPPORT BY FIXTURE WEIGHT
C. ≤ 10 LB MINIMUM ONE 12 GAGE HANGER WIRE CONNECTED FROM THE HOUSING TO THE STRUCTURE. WIRE MAY BE SLACK.
D. ≤ 56 LB MINIMUM TWO 12 GAGE HANGER WIRES CONNECTED FROM THE HOUSING TO THE STRUCTURE. WIRE MAY BE SLACK.
E. > 56 LB INDEPENDENTLY SUPPORTED FROM THE STRUCTURE BY APPROVED HANGERS.
F. PENDANT LIGHT FIXTURES MINIMUM ONE 9 GAGE WIRE.

SEISMIC DESIGN CATEGORY D, E AND F - FLEXIBLE MOUNTED MECHANICAL DEVICES

A. REQUIRED SUPPORT BY WEIGHT
a. ≤ 20 LB. ATTACHED TO MAIN RUNNERS OR CROSS RUNNERS WITH THE LAME LOAD CARRYING CAPACITY AS THE MAIN RUNNERS.
b. ≤ 56 LB. AND > 20 LB. MINIMUM TWO NO. 12 GAGE HANGER WIRES. WIRES MAY BE SLACK.
c. > 56 LB. DIRECTLY SUPPORTED FROM THE STRUCTURE.

SEISMIC DESIGN – ISLAND CEILINGS (CLOUDS)

A. THE EXCERPT BELOW FROM ASCE7-10, SECTION 13.5.1/ASTM E580 1.8 EXEMPTS CERTAIN ISLAND CEILINGS FROM COMPLIANCE WITH SEISMIC REQUIREMENTS:
EXCEPTION: COMPONENTS SUPPORTED BY CHAINS OR OTHERWISE SUSPENDED FROM THE STRUCTURE ARE NOT REQUIRED TO SATISFY THE SEISMIC FORCE AND RELATIVE DISPLACEMENT REQUIREMENTS PROVIDED THEY MEET ALL OF THE FOLLOWING CRITERIA:
a. THE DESIGN LOAD FOR SUCH ITEMS SHALL BE EQUAL TO 1.4 TIMES THE OPERATING WEIGHT ACTING DOWN WITH A SIMULTANEOUS HORIZONTAL LOAD EQUAL TO 1.4 TIMES THE OPERATING WEIGHT. THE HORIZONTAL LOAD SHALL BE APPLIED IN THE DIRECTION THAT RESULTS IN THE MOST CRITICAL LOADING FOR DESIGN.
b. SEISMIC INTERACTION EFFECTS SHALL BE CONSIDERED IN ACCORDANCE WITH ASCE 7-10 SECTION 12.2.3.
c. THE CONNECTION TO THE STRUCTURE SHALL ALLOW A 360 DEGREE RANGE OF MOTION IN THE HORIZONTAL PLANE.

NIXA POLICE DEPARTMENT
305 N LEEANN DR
NIXA, MO 65714

112 S. Main St., Nixa, MO 65714 Ph: 417-724-8553

Chiodini ARCHITECTS
Architecture / Interior Design / Graphics
1401 S. Brentwood Blvd. / Suite 575 / St. Louis, Missouri 63144
314-725-5588 / arch@chiodini.com

Reissue Date

Professional of Record

STATE OF MISSOURI NATHAN P. RAPP NUMBER A-2008001201 ARCHITECT

DATE 2025-06-11

Copyright 2025 ©
These prints are the property of the architect and shall be usedonly for the project referenced above

Architect: LMH / NPR
Project #: 24-003
Date: 2025-06-11
Drawing Title: CEILING DETAILS
Sheet: A520

PRINTED: 6/11/2025 11:44:12 AM

CABINET HARDWARE DESIGN INTENT:
RE: SPEC FOR TYPICAL CABINET PULL SELECTION.
MANUFACTURER STANDARD WIRE PULLS (BLACK FINISH) TO BE LOCATED **ONLY** AT ROOMS; 162/164/170.

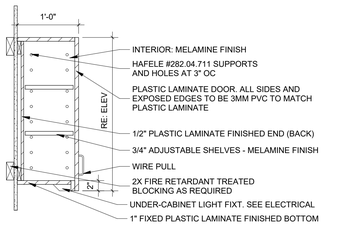

1 UPPER WALL CABINET
1" = 1'-0"

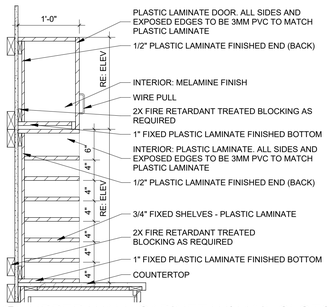

2 UPPER WALL CABINET W/ MAIL SLOTS
1" = 1'-0"

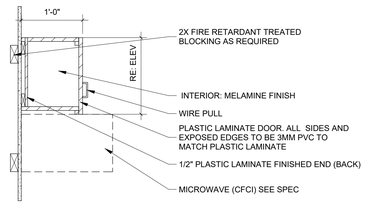

3 UPPER WALL CABINET WITH MICROWAVE
1" = 1'-0"

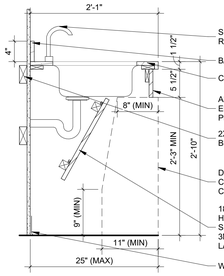

4 ADA SINK
1" = 1'-0"

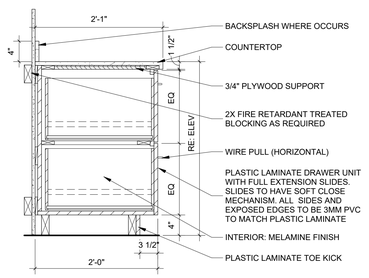

5 BASE CABINET WITH 2 DRAWERS
1" = 1'-0"

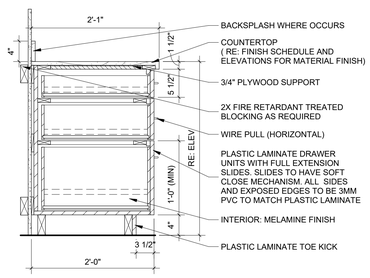

6 BASE CABINET WITH 3 DRAWERS
1" = 1'-0"

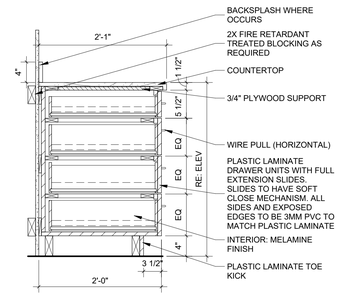

7 BASE CABINET WITH 4 DRAWERS
1" = 1'-0"

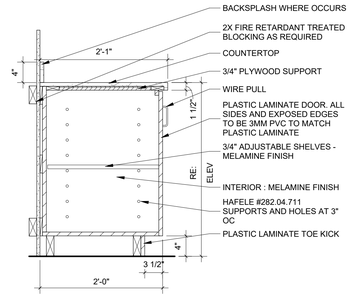

8 BASE CABINET WITH DOOR
1" = 1'-0"

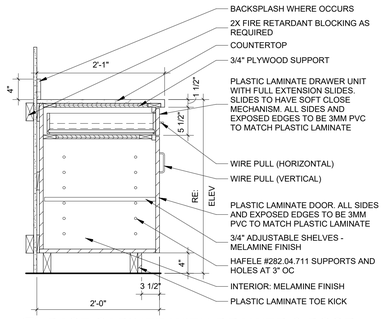

9 BASE CABINET WITH DRAWER & DOOR
1" = 1'-0"

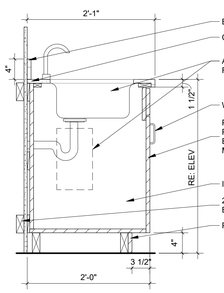

10 BASE CABINET WITH SINK
1" = 1'-0"

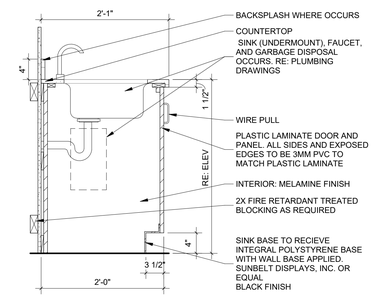

11 BASE CABINET WITH SINK (ROLL UNDER)
1" = 1'-0"

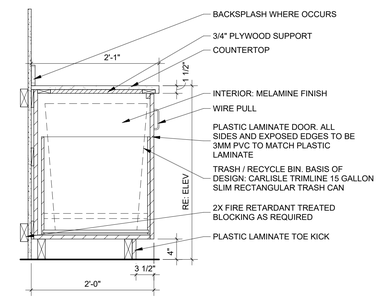

12 BASE CABINET WITH TRASH & RECYCLE
1" = 1'-0"

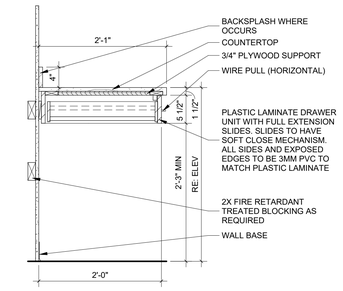

13 WORK COUNTER WITH DRAWER
1" = 1'-0"

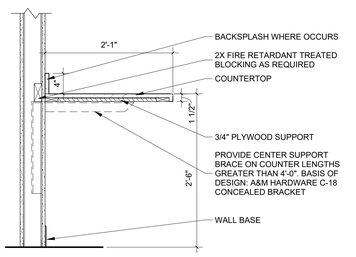

14 COUNTER TOP WITH BRACKET
1" = 1'-0"

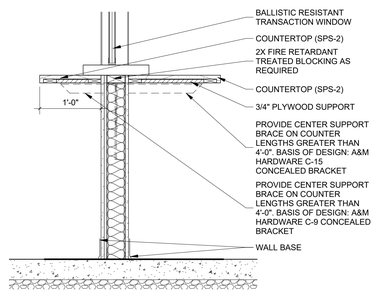

15 CLERK'S TRANSACTION COUNTER
1" = 1'-0"

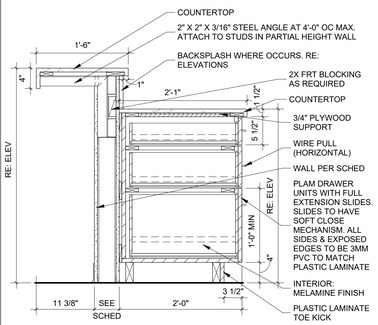

16 BASE CABINET WITH BAR TOP (3 DRAWER)
1" = 1'-0"

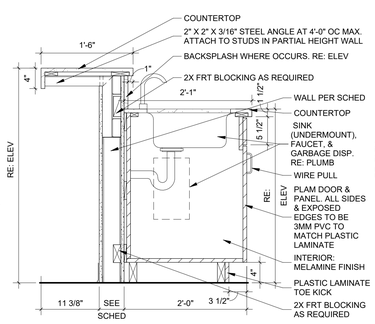

17 BASE CABINET WITH BAR TOP (SINK)
1" = 1'-0"

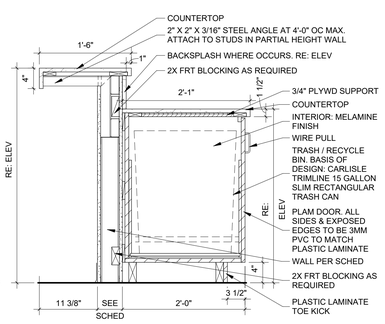

18 BASE CABINET W/ BAR TOP (WASTE BIN)
1" = 1'-0"

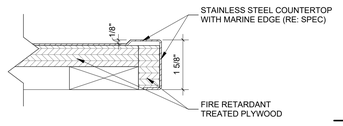

19 STAINLESS STEEL COUNTERTOP DETAIL
6" = 1'-0"

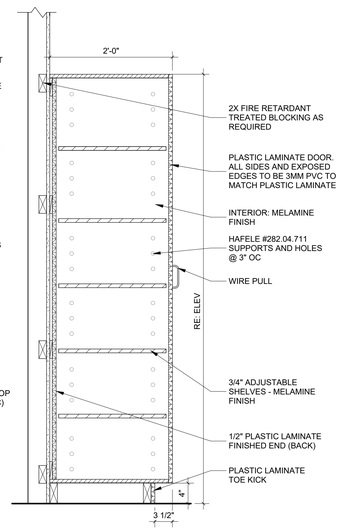

20 TALL CABINET
1" = 1'-0"

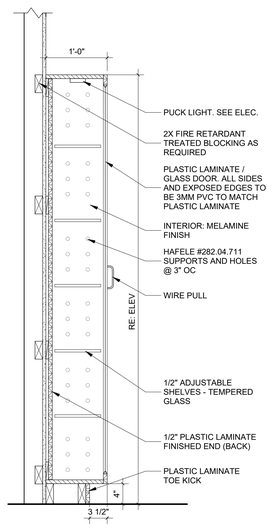

21 DISPLAY CASE
1" = 1'-0"

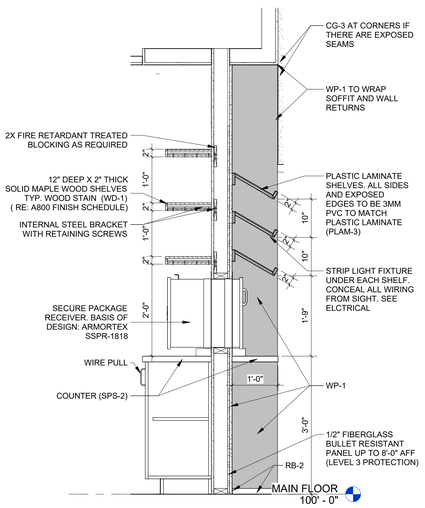

22 FORMS SHELVES & SECURE PACKAGE RECEIVER
3/4" = 1'-0"

PRINTED: 6/11/2025 11:44:15 AM

NIXA POLICE DEPARTMENT

305 N LEEANN DR
NIXA, MO 65714

INSIGHT DESIGN IDeA ARCHITECTS
112 S. Main St., Nixa, MO 65714 Ph: 417-724-8553

CJD Engineering | Energy | Innovation

olsson

METTEMEYER ENGINEERING LLC

Chiodini ARCHITECTS
Architecture / Interior Design / Graphics
1401 S. Brentwood Blvd. | Suite 375 | St. Louis, Missouri 63144
314-725-5088 | ann@chiodini.com

Reissue Date

Professional of Record

STATE OF MISSOURI
NATHAN P. RAPP
NUMBER A-7000146766
ARCHITECT

DATE 2025-06-11

Copyright 2025 ©
These prints are the property of the architect and shall be usedonly for the project referenced above

Architect
LMH / NPR

Project #
24-003

Date
2025-06-11

Drawing Title:
MILLWORK DETAILS

Sheet:
A530

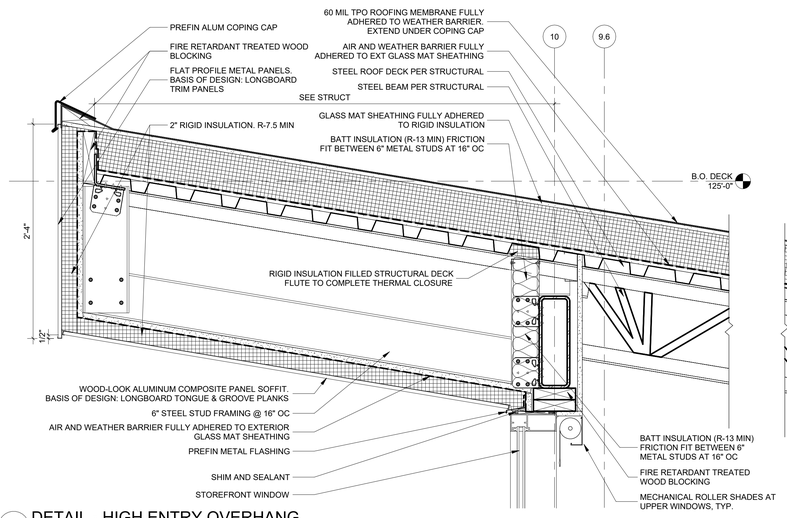

3 DETAIL - HIGH ENTRY OVERHANG
1 1/2" = 1'-0"

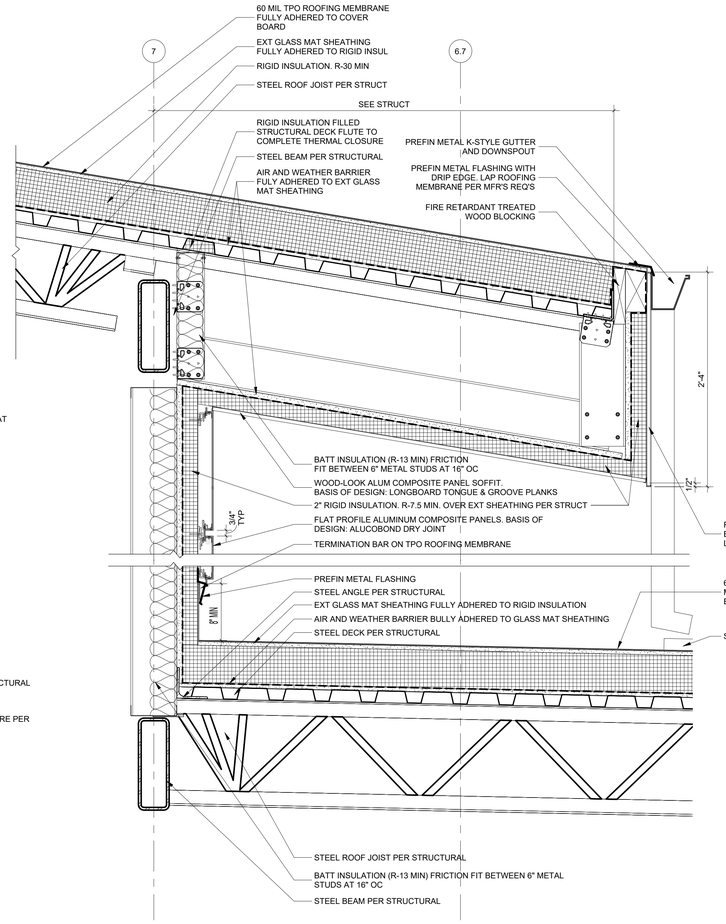

4 DETAIL - LOW ENTRY OVERHANG
1 1/2" = 1'-0"

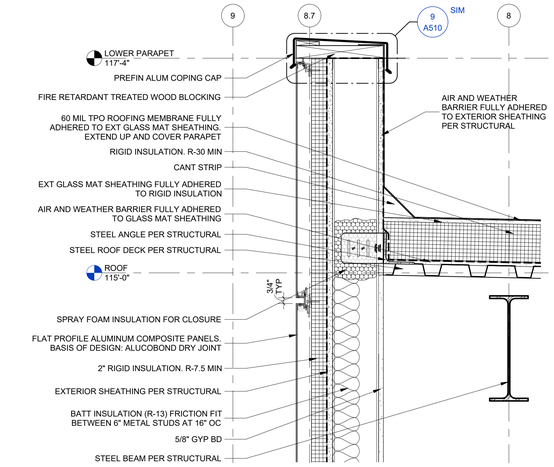

7 DETAIL - TYP PARAPET AT METAL PANELS
1 1/2" = 1'-0"

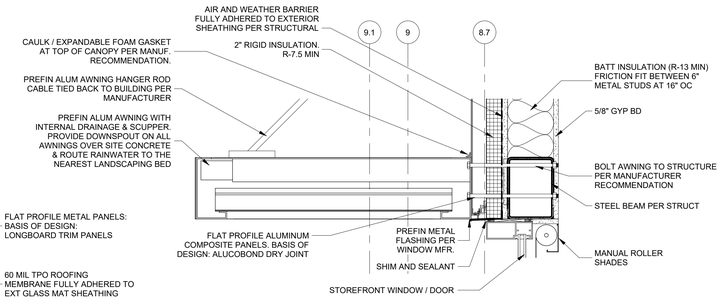

8 DETAIL - PREFINISHED AWNING @ WOOD LOOK SIDING
1 1/2" = 1'-0"

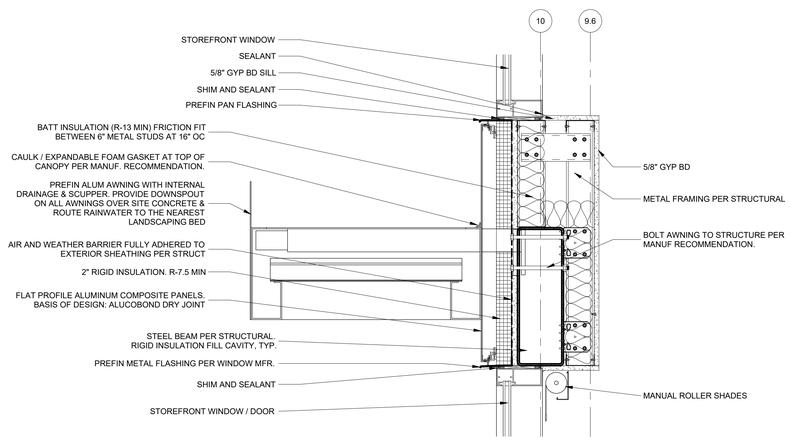

2 DETAIL - LARGE AWNING AT ENTRY ELEMENT
1 1/2" = 1'-0"

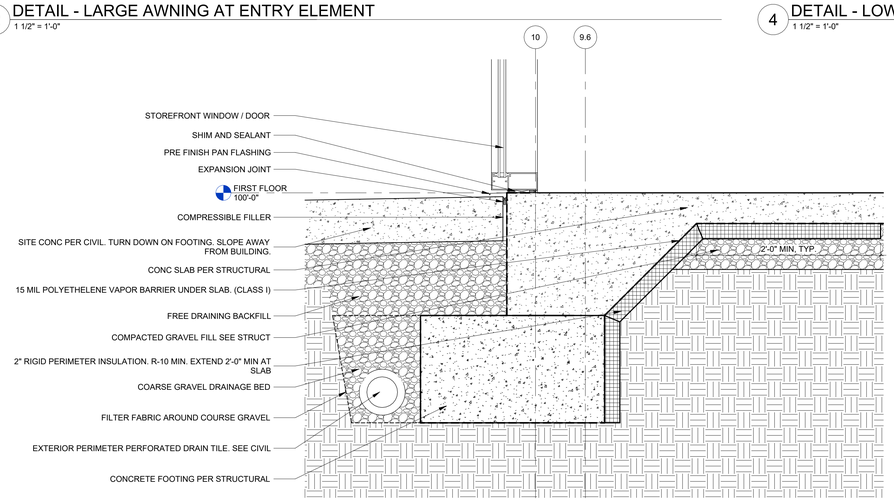

1 DETAIL - FOUNDATION @ STOREFRONT
1 1/2" = 1'-0"

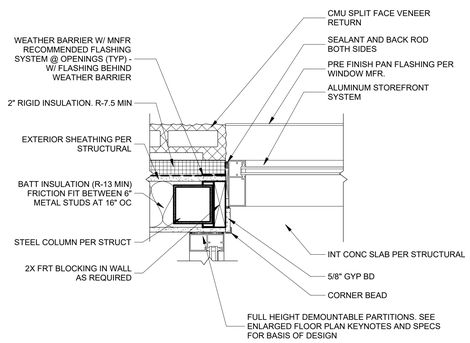

6 PLAN DETAIL @ EXTERIOR STOREFRONT
1 1/2" = 1'-0"

PRINTED: 6/11/2025 11:44:17 AM

NIXA POLICE DEPARTMENT

305 N LEEANN DR
NIXA, MO 65714

INSPIRE DESIGN IDeA ARCHITECTS
112 S. Main St., Nixa, MO 65714 Ph: 417-724-8553

CJD Engineering | Energy | Innovation

olsson

METTEMEYER ENGINEERING LLC

Chiodini ARCHITECTS
Architecture / Interior Design / Graphics
1401 S. Brentwood Blvd. | Suite 570 | St. Louis, Missouri 63144
314-725-0888 | arch@chiodini.com

Reissue Date

Professional of Record

STATE OF MISSOURI
NATHAN P. RAPP
NUMBER A-2001038751
ARCHITECT

DATE 2025-06-11

Copyright 2025 ©
These prints are the property of the architect and shall be usedonly for the project referenced above

Architect
LMH / NPR

Project #
24-003

Date
2025-06-11

Drawing Title:
SECTION DETAILS

Sheet:
A540

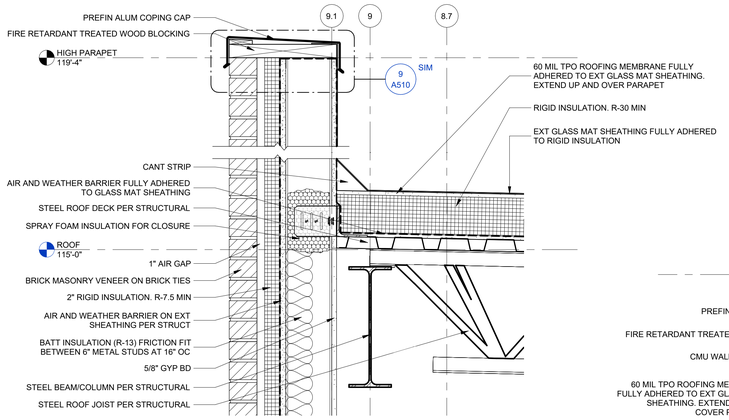

7 DETAIL - PARAPET @ BRICK VENEER ON STUD WALL
1 1/2" = 1'-0"

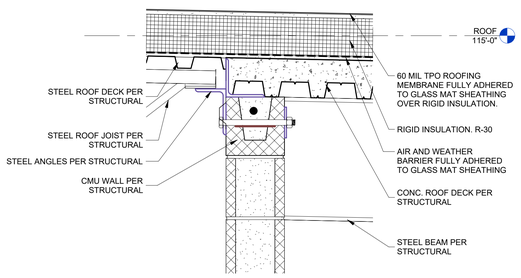

10 DETAIL - T.O. WALL @ HARDENED STORM SHELTER WALL
1 1/2" = 1'-0"

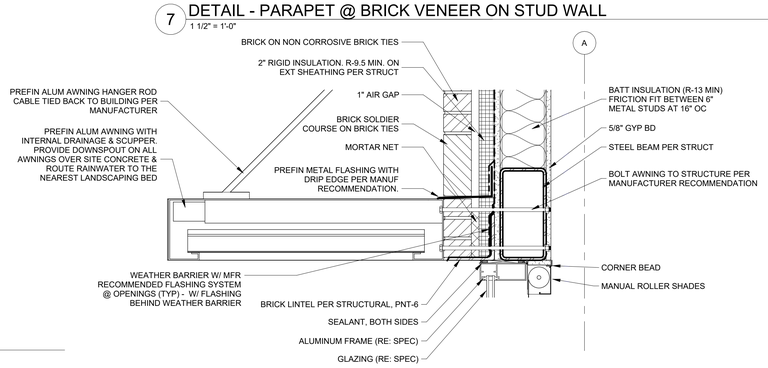

6 DETAIL - PREFINISHED AWNING @ BRICK SIDING
1 1/2" = 1'-0"

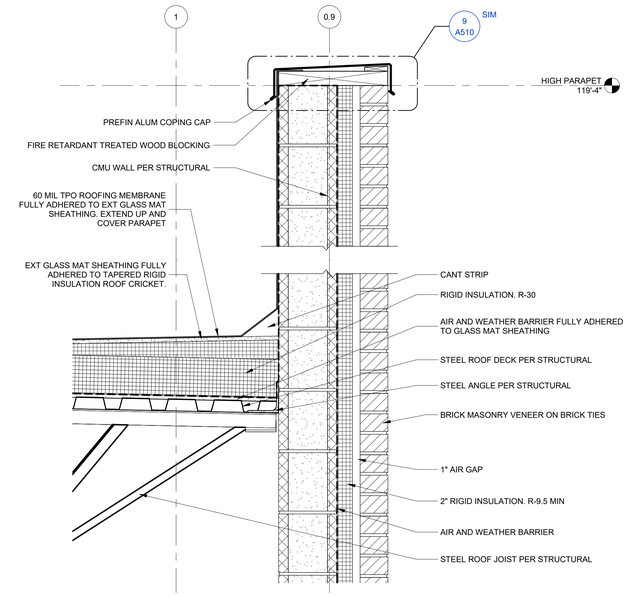

3 DETAIL - TYP PARAPET @ BRICK VENEER ON CMU WALL
1 1/2" = 1'-0"

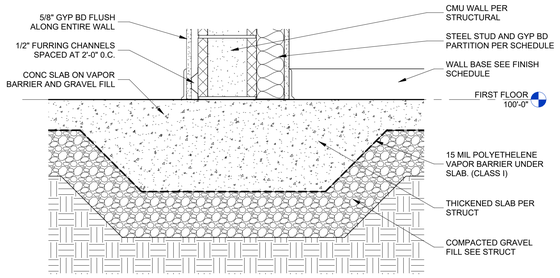

9 DETAIL - BASE OF WALL @ HARDENED STORM SHELTER
1 1/2" = 1'-0"

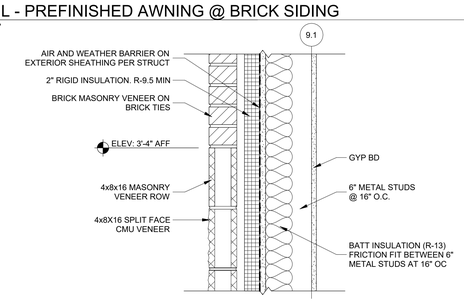

5 DETAIL - BRICK AND CMU (SMOOTH/SPLIT FACE) VENEER ON METAL STUDS
1 1/2" = 1'-0"

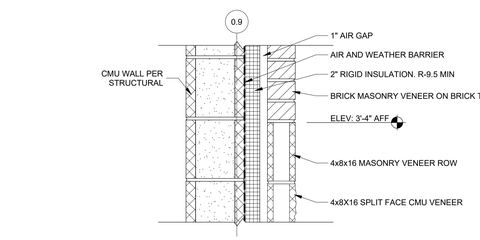

2 DETAIL - BRICK & CMU (SMOOTH/SPLIT FACE) VENEER ON CMU WALL
1 1/2" = 1'-0"

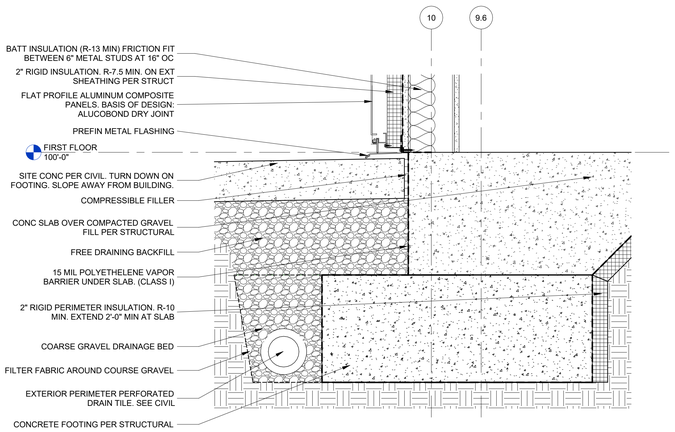

8 DETAIL - ALUMINUM COMPOSITE PANELS @ BASE OF EXTERIOR WALL
1 1/2" = 1'-0"

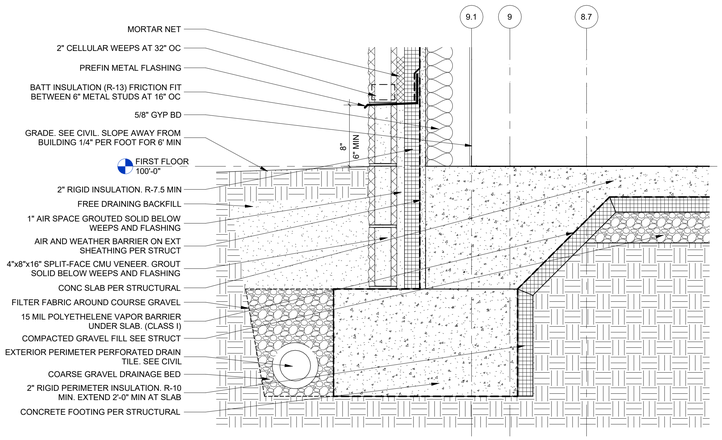

4 DETAIL - SPLIT FACE CMU VENEER @ BASE OF EXTERIOR STUD WALL
1 1/2" = 1'-0"

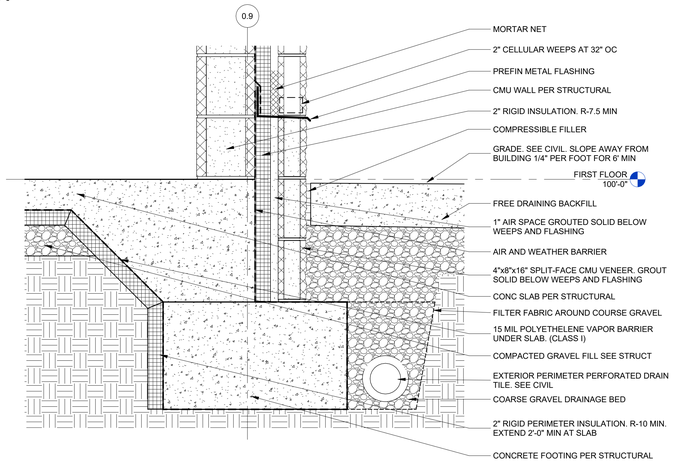

1 DETAIL - SPLIT FACE CMU VENEER @ BASE OF CMU WALL
1 1/2" = 1'-0"

PRINTED: 6/11/2025 11:44:21 AM

NIXA POLICE DEPARTMENT

305 N LEEANN DR
NIXA, MO 65714

INSPIRE DESIGN IDeA ARCHITECTS
112 S. Main St., Nixa, MO 65714 Ph: 417-724-8553

CJD Engineering | Energy | Innovation

olsson

METTEMEYER ENGINEERING LLC

Christini ARCHITECTS
Architecture / Interior Design / Graphics
1401 S. Brentwood Blvd. | Suite 257 | St. Louis, Missouri 63144
314-726-5566 | arch@christini.com

Reissue Date

Professional of Record

STATE OF MISSOURI
NATHAN P. RAPP
NUMBER A-7000
ARCHITECT

DATE 2025-06-11

Copyright 2025 ©
These prints are the property of the architect and shall be usedonly for the project referenced above

Architect
LMH / NPR

Project #
24-003

Date
2025-06-11

Drawing Title:
SECTION DETAILS

Sheet:
A541

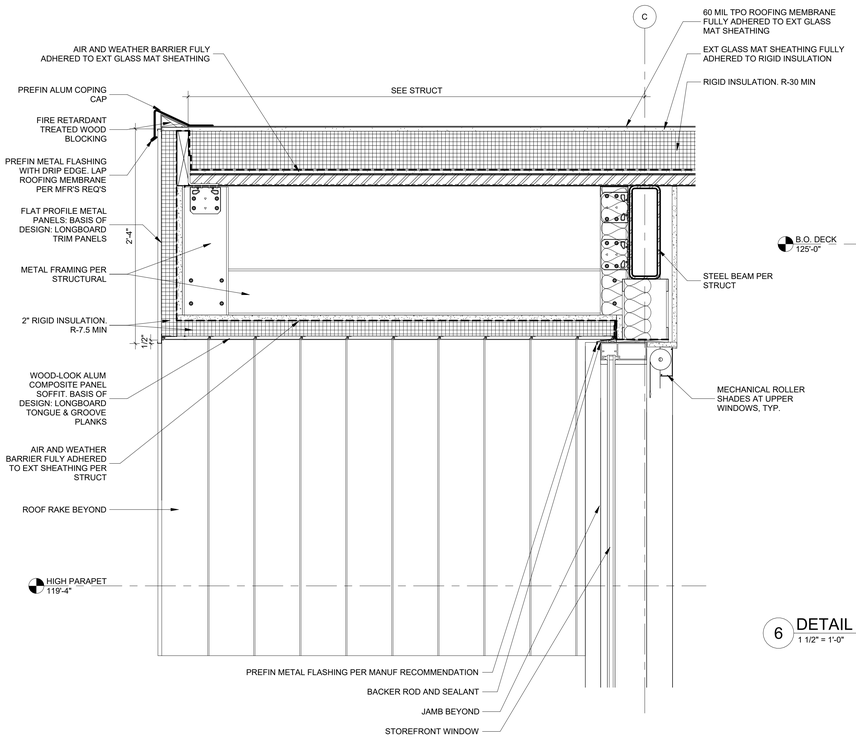

8 DETAIL - HIGH SIDE ENTRY OVERHANG @ FLAT PROFILE ACM PANEL
1 1/2" = 1'-0"

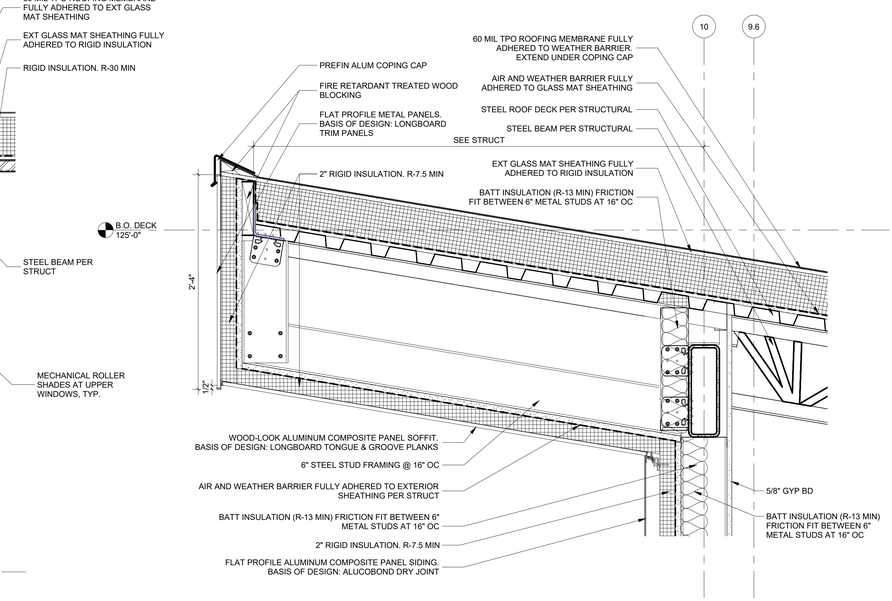

6 DETAIL - HIGH ENTRY OVERHANG @ FLAT PROFILE ACM SIDING
1 1/2" = 1'-0"

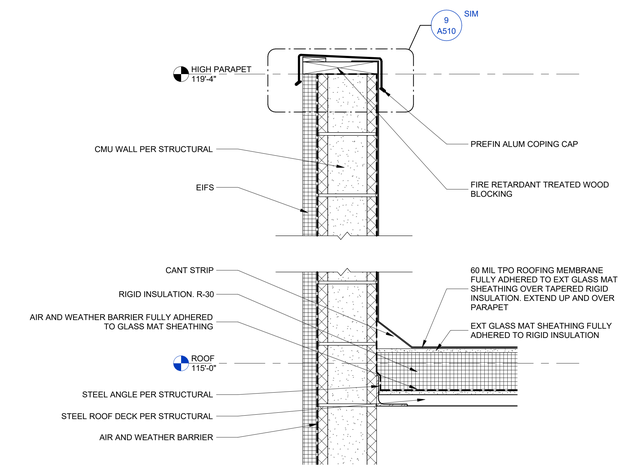

4 TYP PARAPET @ EIFS ON CMU
1 1/2" = 1'-0"

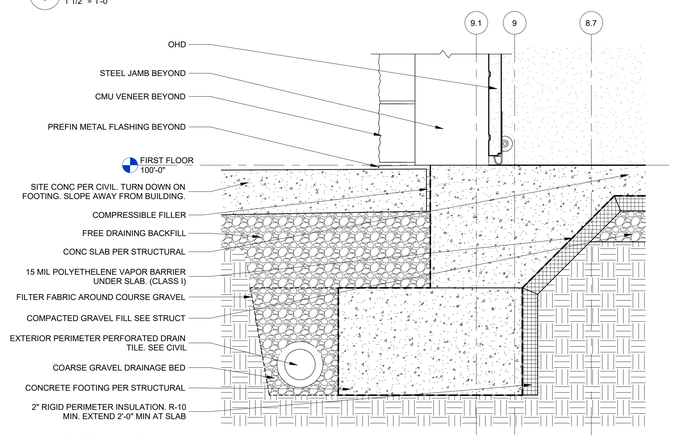

9 DETAIL - FOUNDATION @ OHD
1 1/2" = 1'-0"

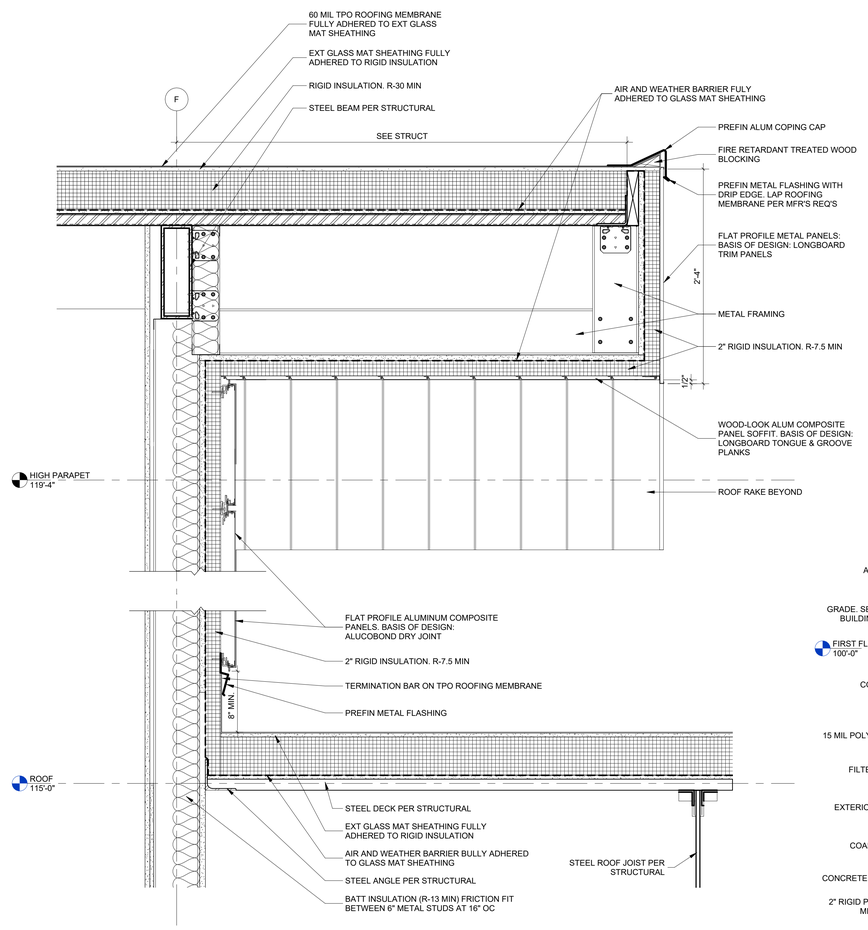

5 DETAIL - HIGH ENTRY OVERHANG @ FLAT PROFILE ACM SIDING
1 1/2" = 1'-0"

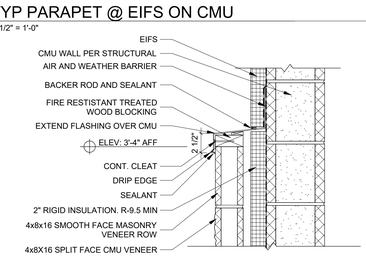

3 DETAIL - EIFS / CMU THIN SET VENEER ON STRUCTURAL CMU
1 1/2" = 1'-0"

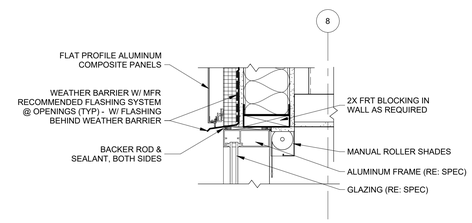

2 DETAIL - ALSF HEAD DETAIL @ ACM PANEL
1 1/2" = 1'-0"

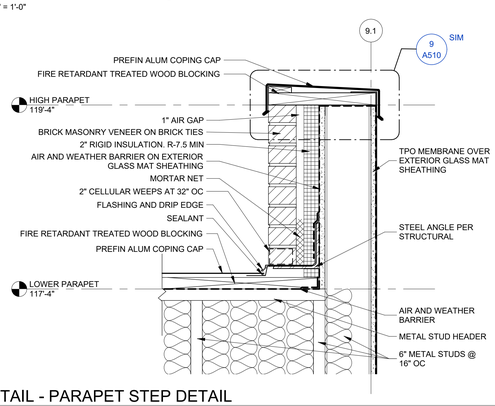

7 DETAIL - PARAPET STEP DETAIL
1 1/2" = 1'-0"

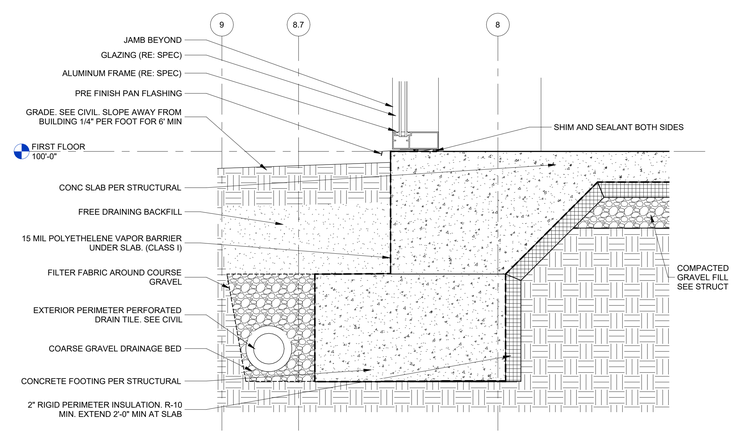

1 DETAIL - FOUNDATION @ STOREFRONT
1 1/2" = 1'-0"

PRINTED: 6/11/2025 11:44:24 AM

NIXA POLICE DEPARTMENT

305 N LEEANN DR
NIXA, MO 65714

INSIGHT DESIGN IDeA ARCHITECTS
112 S. Main St., Nixa, MO 65714 Ph: 417-724-8553

CJD Engineering | Energy | Innovation

olsson

METTEMEYER ENGINEERING LLC

Christine ARCHITECTS
Architecture / Interior Design / Graphics
1401 S. Brentwood Blvd. | Suite 275 | St. Louis, Missouri 63144
314-725-5085 | ian@christine.com

Reissue Date

Professional of Record

STATE OF MISSOURI
NATHAN P. RAPP
NUMBER A-2001038751
ARCHITECT

DATE 2025-06-11

Copyright 2025 ©
These prints are the property of the architect and shall be usedonly for the project referenced above

Architect
LMH / NPR

Project #
24-003

Date
2025-06-11

Drawing Title:
SECTION DETAILS

Sheet:
A542

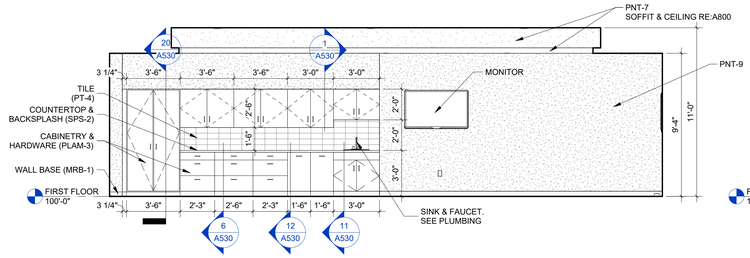

1 105 PUBLIC MEETING - SOUTH ELEVATION AT CASEWORK
1/4" = 1'-0"

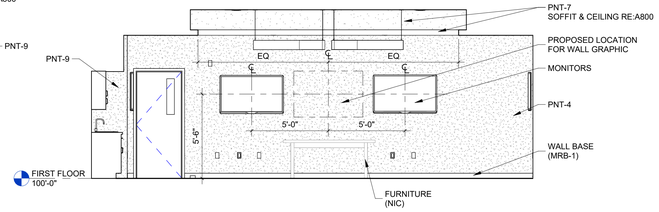

2 105 PUBLIC MEETING- EAST ELEVATION AT MEDIA WALL
1/4" = 1'-0"

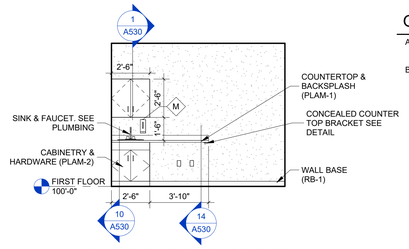

3 108 FINGERPRINT - EAST ELEV
1/4" = 1'-0"

GENERAL INTERIOR ELEVATION NOTES:

A. PROVIDE FIRE RETARDANT TREATED WOOD BLOCKING IN WALLS AT CASEWORK, COUNTERTOPS, SHELVING, MONITOR BRACKETS, WALL MOUNTED EQUIPMENT, ETC.
B. COORDINATE PLASTIC LAMINATE, SOLID POLYMER, QUARTZ SURFACE, ETC SURFACE PATTERN/GRAIN TO RUN IN THE SAME DIRECTION AT CORNERS AND RETURNS. COORDINATE 3-SIDED CORNERS WITH ARCHITECT FOR PATTERN DIRECTION.

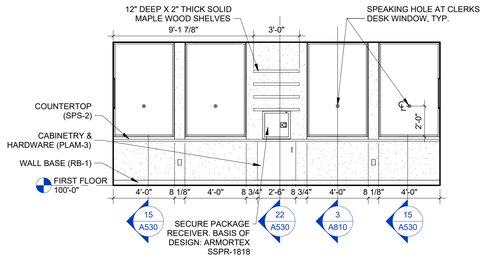

4 110 CLERKS EAST ELEVATION
1/4" = 1'-0"

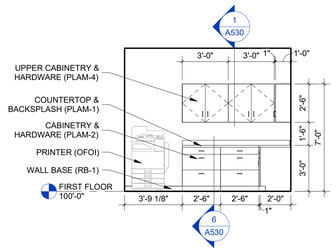

5 111 WORK ROOM - WEST ELEV
1/4" = 1'-0"

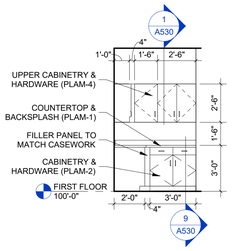

6 111 WORK ROOM - NORTH ELEV
1/4" = 1'-0"

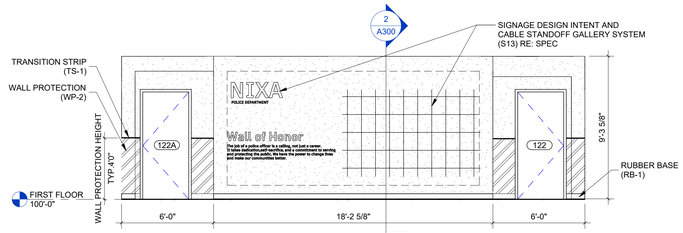

7 114 CORRIDOR - WEST ELEVATION
1/4" = 1'-0"

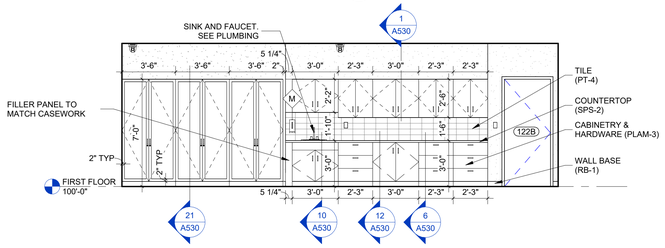

8 122 CLASSROOM - EAST ELEV
1/4" = 1'-0"

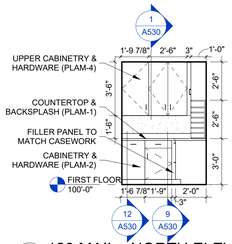

9 128 MAIL - NORTH ELEV
1/4" = 1'-0"

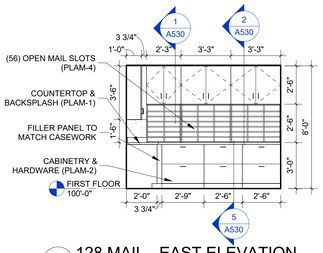

10 128 MAIL - EAST ELEVATION
1/4" = 1'-0"

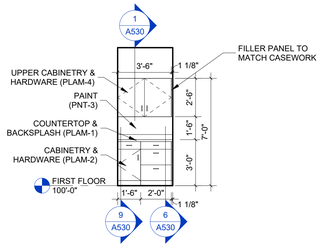

11 153 ROLL CALL - CASEWORK
1/4" = 1'-0"

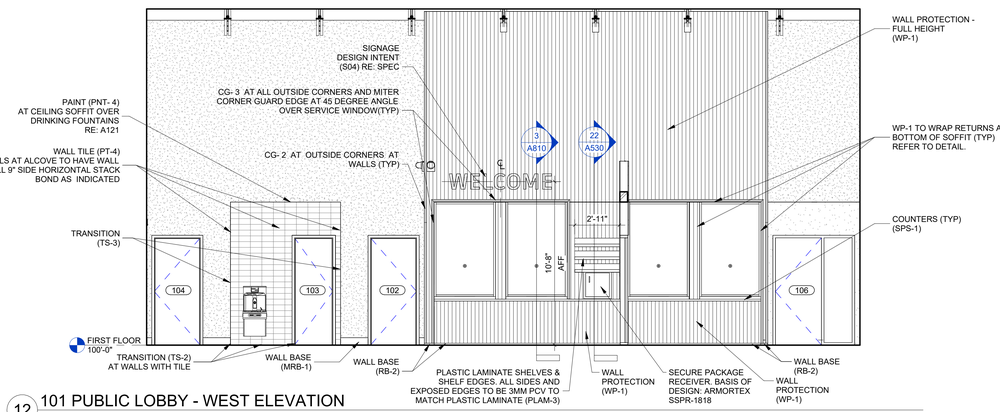

12 101 PUBLIC LOBBY - WEST ELEVATION
1/4" = 1'-0"

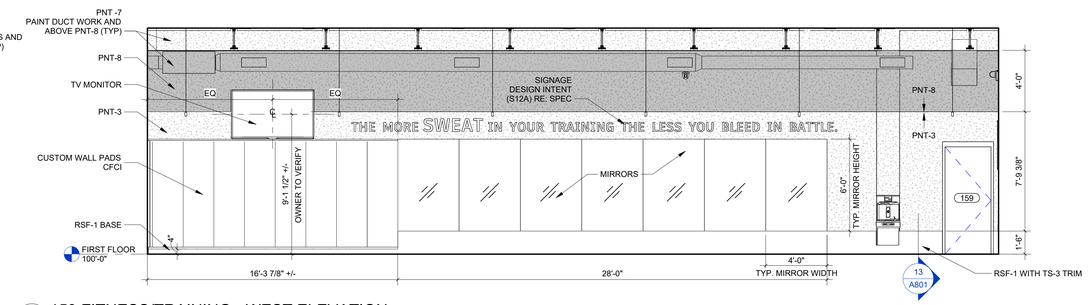

13 159 FITNESS/TRAINING - WEST ELEVATION
1/4" = 1'-0"

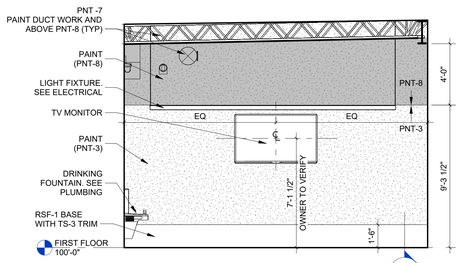

14 159 FITNESS/TRAINING - NORTH ELEVATION
1/4" = 1'-0"

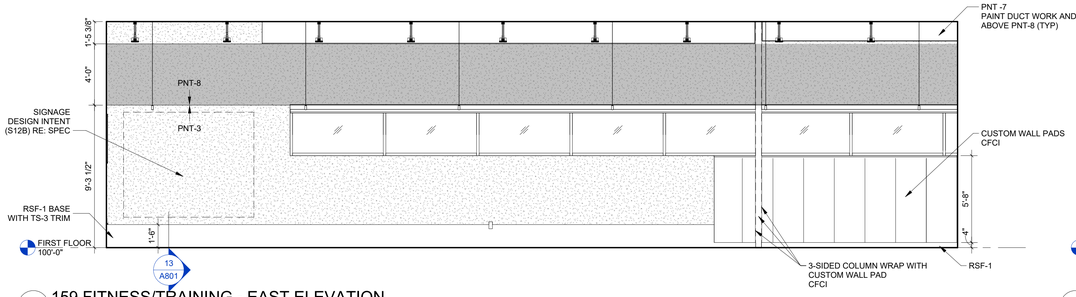

15 159 FITNESS/TRAINING - EAST ELEVATION
1/4" = 1'-0"

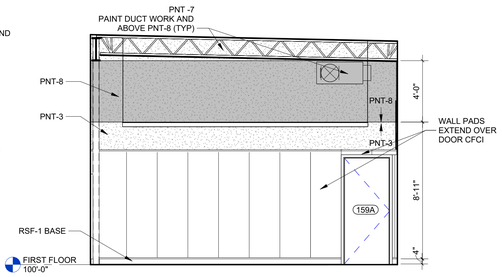

16 159 FITNESS/TRAINING - SOUTH ELEVATION
1/4" = 1'-0"

NIXA POLICE DEPARTMENT

305 N LEEANN DR
NIXA, MO 65714

IDeA ARCHITECTS
112 S. Main St., Nixa, MO 65714 Ph: 417-724-8553

CJD Engineering | Energy | Innovation

olsson

METTEMEYER ENGINEERING LLC

Christian ARCHITECTS
Architecture / Interior Design / Graphics
1401 S. Brentwood Blvd. | Suite 575 | St. Louis, Missouri 63144
314-725-5580 | aarc@christian.com

Reissue Date

Professional of Record

STATE OF MISSOURI
NATHAN P. RAPP
NUMBER A-2001038424
ARCHITECT

DATE 2025-06-11

Copyright 2025 ©
These prints are the property of the architect and shall be usedonly for the project referenced above

Architect
KM / NPR

Project #
24-003

Date
2025-06-11

Drawing Title:
INTERIOR ELEVATIONS

Sheet:
A600

PRINTED: 6/11/2025 11:44:32 AM

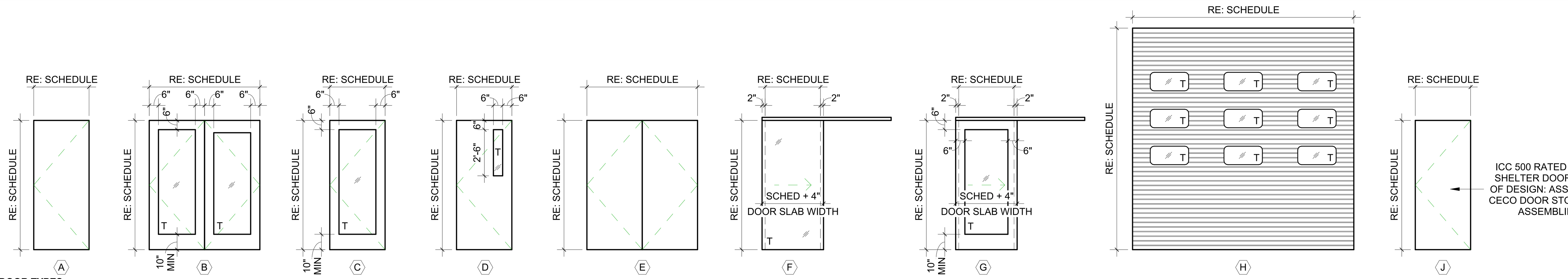

DOOR TYPES
T = TEMPERED GLASS
1/4" = 1'-0"

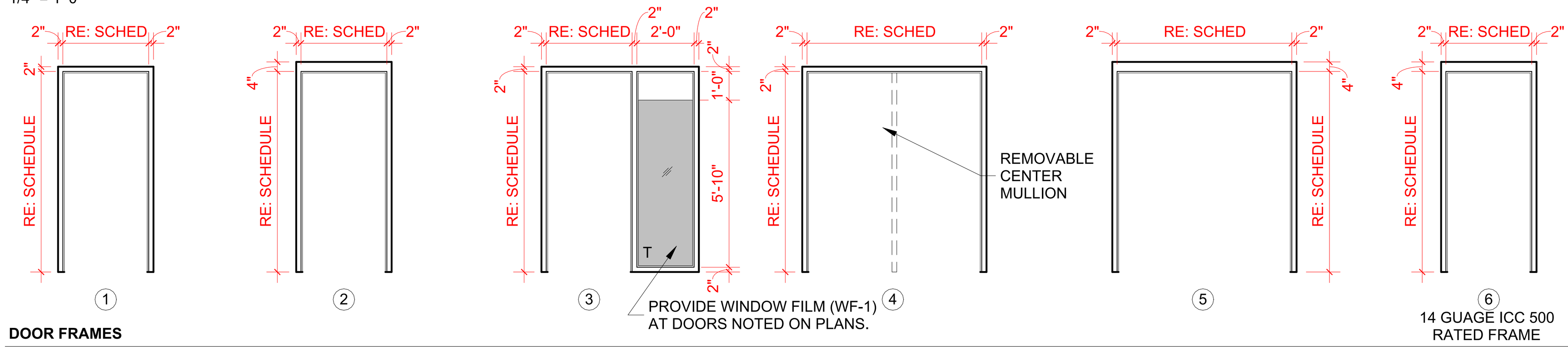

DOOR FRAMES
1/4" = 1'-0"

GENERAL DOOR & WINDOW NOTES:

A. REFER TO FLOOR PLANS FOR DOOR SWING DIRECTION
B. ALL DOOR PULLS/HANDLES SHALL BE ADA COMPLIANT. LEVER HANDLES AND DOOR PULLS SHALL BE MOUNTED @ 36" ABOVE BOTTOM OF DOOR TO CENTER OF HANDLE.
C. EXTERIOR FENESTRATION SHALL HAVE THE FOLLOWING U-VALUES AND SHGC VALUES PER IECC REQUIREMENTS:
   a. OPAQUE DOORS
      - SWINING (ASSEMBLY) U-0.61
      - GARAGE DOOR (ASSEMBLY) U-0.31
   b. FENESTRATION - METAL FRAMING
      - FIXED FENESTRATION: U-038
      - OPERABLE FENESTRATION: U-0.45
      - ENTRANCE DOORS: U-0.77
   c. SHGC LIMITS OF FENESTRATION
      - PROJECTION FACTOR > 0.2
         1. NORTH: 0.48
         2. EAST, WEST, & SOUTH: 0.36
      - 0.2 ≤ PROJECTION FACTOR < 0.5
         1. NORTH: 0.53
         2. EAST, WEST, & SOUTH: 0.58
      - PROJECTION FACTOR ≥ 0.5
         1. NORTH: 0.58
         2. EAST, WEST & SOUTH: 0.58
   d. SKYLIGHTS: U-0.50, SHGC-0.40
   e. FRAMES SHALL BE THERMALLY BROKEN
D. PROVIDE (OR REPAIR AS NEEDED) SHEET METAL FLASHING WITH DRIP EDGE OVER THE HEAD OF ALL EXTERIOR DOORS.
E. PROVIDE FLOOR OR WALL BUMPERS ON ALL SWINGING DOORS. COORDINATE WITH ARCHITECT
F. PROVIDE JAMB EXTENSIONS AS NEEDED TO FULLY CONCEAL WALL ASSEMBLY CAVITY AT STONE OR BRICK VENEER
G. ALL DOORS ALONG AN ACCESSIBLE ROUTE ARE TO HAVE 10" MINIMUM BOTTOM RAIL IN COMPLIANCE WITH 2017 ANSI A117.1
H. SEE SPECS FOR DOOR HARDWARE.

DOOR SCHEDULE

	DOOR								FRAME				DETAILS		HDW	FIRE	
DOOR #	PAIR	W	H	THK	ELEV	MATL	FINISH	GLAZING	ELEV	MATL	FINISH	GLAZING	HEAD	JAMB	SET	RATING	REMARKS
100	●	6'-0"	7'-0"	1 3/4"	B	ALUM	BLACK	TEMPERED	SEE A710	ALUM	BLACK	N/A	12/A701	22/A701	2	NOT RATED	
100A	●	6'-0"	7'-0"	1 3/4"	B	ALUM	BLACK	TEMPERED	SEE A711	ALUM	BLACK	N/A	13/A701	18/A701	6	NOT RATED	
101		3'-0"	7'-0"	1 3/4"	C	ALUM	BLACK	TEMPERED	SEE A711	ALUM	BLACK	N/A	13/A701	18/A701	7	NOT RATED	PUSH BUTTON TO BE MOUNTED AT CLERK DESKS. LEVEL 3 BULLET RESISTANT DOOR AND FRAME
102		3'-0"	7'-0"	1 3/4"	A	SC WD	STN-1	N/A	1	HM	PNT-6	N/A	4/A701	4/A701	33	NOT RATED	
103		2'-6"	7'-0"	1 3/4"	A	HM	PNT-6	N/A	1	HM	PNT-6	N/A	4/A701	4/A701	19	NOT RATED	
104		3'-0"	7'-0"	1 3/4"	A	SC WD	STN-1	N/A	1	HM	PNT-6	N/A	4/A701	4/A701	33	NOT RATED	
105	●	3'-0"	7'-0"	1 3/4"	E	SC WD	STN-1	TEMPERED	4	HM	PNT-6	N/A	4/A701	4/A701	23	60 MIN	WF-2: ON GLASS. ONE WAY REFLECTIVE FILM (RE: A800)
105A		3'-0"	7'-0"	1 3/4"	A	SC WD	STN-1	N/A	1	HM	PNT-6	N/A	4/A701	4/A701	20	NOT RATED	
105B		3'-0"	7'-0"	1 3/4"	D	SC WD	STN-1	TEMPERED	1	HM	PNT-6	N/A	1/A702	1/A702	18	60 MIN	LEVEL 3 BULLET RESISTANT DOOR AND FRAME
106		3'-0"	7'-0"	1 3/4"	A	SC WD	STN-1	N/A	3	HM	PNT-6	TEMPERED	1/A702	1/A702	8	NOT RATED	PUSH BUTTON TO BE MOUNTED AT CLERK DESKS. LEVEL 3 BULLET RESISTANT DOOR AND FRAME
107		3'-0"	7'-0"	1 3/4"	A	SC WD	STN-1	N/A	3	HM	PNT-6	TEMPERED	1/A702	1/A702	31	NOT RATED	LEVEL 3 BULLET RESISTANT DOOR AND FRAME
108		3'-0"	7'-0"	1 3/4"	D	SC WD	STN-1	TEMPERED	1	HM	PNT-6	N/A	4/A701	1/A702	31	NOT RATED	LEVEL 3 BULLET RESISTANT DOOR AND FRAME
109		3'-0"	7'-0"	1 3/4"	A	SC WD	STN-1	N/A	3	HM	PNT-6	TEMPERED	1/A702	9/A701	9.1	NOT RATED	
112		3'-0"	7'-0"	1 3/4"	A	SC WD	STN-1	N/A	3	HM	PNT-6	TEMPERED	4/A701	9/A701	25	NOT RATED	
113		3'-0"	7'-0"	1 3/4"	A	SC WD	STN-1	N/A	3	HM	PNT-6	TEMPERED	4/A701	9/A701	31	NOT RATED	
114		3'-0"	7'-5"	1 3/4"	C	ALUM	BLACK	TEMPERED	SEE A710	ALUM	BLACK	N/A	11/A701	21/A701	3	NOT RATED	
114A		4'-0"	7'-0"	1 3/4"	A	HM	PNT-6	N/A	2	HM	PNT-6	N/A	3/A701	8/A701	11	60 MIN	
115		3'-0"	7'-0"	1 3/4"	C	ALUM	BLACK	TEMPERED	SEE A711	ALUM	BLACK	N/A	13/A701	18/A701	30	NOT RATED	
116		3'-0"	7'-0"	1 3/4"	A	SC WD	STN-1	N/A	3	HM	PNT-6	TEMPERED	4/A701	9/A701	31	NOT RATED	
117		3'-0"	7'-0"	1 3/4"	C	SC WD	STN-1	TEMPERED	SEE A711	ALUM	BLACK	N/A	13/A701	18/A701	25	NOT RATED	
118		3'-0"	7'-0"	1 3/4"	C	SC WD	STN-1	TEMPERED	SEE A711	ALUM	BLACK	N/A	13/A701	18/A701	25	NOT RATED	
119		3'-0"	7'-0"	1 3/4"	C	SC WD	STN-1	TEMPERED	SEE A711	ALUM	BLACK	N/A	13/A701	18/A701	25	NOT RATED	
120		3'-0"	7'-0"	1 3/4"	C	SC WD	STN-1	TEMPERED	SEE A711	ALUM	BLACK	N/A	13/A701	18/A701	25	NOT RATED	
121		3'-0"	7'-0"	1 3/4"	A	SC WD	STN-1	N/A	1	HM	PNT-6	N/A	4/A701	4/A701	28	NOT RATED	
122		3'-0"	7'-0"	1 3/4"	J	SC WD	STN-1	TEMPERED	6	HM	PNT-6	N/A	5/A701	10/A701	22	90 MIN	DOOR TO COMPLY WITH ICC 500 STANDARD. DESIGNED AND TESTED TO COMPLY WITH FEMA P-361 COMMUNITY SHELTER DOOR ASSEMBLY GUIDELINES.
122A		3'-0"	7'-0"	1 3/4"	J	SC WD	STN-1	TEMPERED	6	HM	PNT-6	N/A	5/A701	10/A701	22	90 MIN	DOOR ASSEMBLY TO COMPLY WITH ICC 500 STANDARD. DESIGNED AND TESTED TO COMPLY WITH FEMA P-361 COMMUNITY SHELTER DOOR ASSEMBLY GUIDELINES.
122B		3'-0"	7'-0"	1 3/4"	A	SC WD	STN-1	N/A	1	HM	PNT-6	N/A	4/A701	4/A701	20	NOT RATED	
123		3'-0"	7'-0"	1/2"	G	ALUM	BLACK	TEMPERED	SEE A711	ALUM	BLACK	N/A	14/A701	19/A701	26	NOT RATED	
124		3'-0"	7'-0"	1/2"	G	ALUM	BLACK	TEMPERED	SEE A711	ALUM	BLACK	N/A	14/A701	19/A701	26	NOT RATED	
125		3'-0"	7'-0"	1/2"	G	ALUM	BLACK	TEMPERED	SEE A711	ALUM	BLACK	N/A	14/A701	19/A701	26	NOT RATED	
126		3'-0"	7'-0"	1 3/4"	A	SC WD	STN-1	N/A	1	HM	PNT-6	N/A	4/A701	4/A701	29	NOT RATED	
127		3'-0"	7'-0"	1 3/4"	A	HM	PNT-6	N/A	1	HM	PNT-6	N/A	4/A701	4/A701	10	NOT RATED	
129A		3'-6"	9'-0"	1/2"	F	GLASS	-	TEMPERED	MFR STNDRD	MFR STNDRD	BLACK	N/A	15/A701	20/A701	34	NOT RATED	BASIS OF DESIGN: KI WALL GENIUS
129B		3'-6"	9'-0"	1/2"	F	GLASS	-	TEMPERED	MFR STNDRD	MFR STNDRD	BLACK	N/A	15/A701	20/A701	34	NOT RATED	BASIS OF DESIGN: KI WALL GENIUS
129C		3'-6"	9'-0"	1/2"	F	GLASS	-	TEMPERED	MFR STNDRD	MFR STNDRD	BLACK	N/A	15/A701	20/A701	34	NOT RATED	BASIS OF DESIGN: KI WALL GENIUS
129D		3'-6"	9'-0"	1/2"	F	GLASS	-	TEMPERED	MFR STNDRD	MFR STNDRD	BLACK	N/A	15/A701	20/A701	34	NOT RATED	BASIS OF DESIGN: KI WALL GENIUS
129E		3'-6"	9'-0"	1/2"	F	GLASS	-	TEMPERED	MFR STNDRD	MFR STNDRD	BLACK	N/A	15/A701	20/A701	34	NOT RATED	BASIS OF DESIGN: KI WALL GENIUS
129F		3'-6"	9'-0"	1/2"	F	GLASS	-	TEMPERED	MFR STNDRD	MFR STNDRD	BLACK	N/A	15/A701	20/A701	34	NOT RATED	BASIS OF DESIGN: KI WALL GENIUS
129G		3'-6"	9'-0"	1/2"	F	GLASS	-	TEMPERED	MFR STNDRD	MFR STNDRD	BLACK	N/A	15/A701	20/A701	34	NOT RATED	BASIS OF DESIGN: KI WALL GENIUS
129H		3'-6"	9'-0"	1/2"	F	GLASS	-	TEMPERED	MFR STNDRD	MFR STNDRD	BLACK	N/A	15/A701	20/A701	34	NOT RATED	BASIS OF DESIGN: KI WALL GENIUS
129J		3'-6"	9'-0"	1/2"	F	GLASS	-	TEMPERED	MFR STNDRD	MFR STNDRD	BLACK	N/A	15/A701	20/A701	34	NOT RATED	BASIS OF DESIGN: KI WALL GENIUS
130		3'-0"	7'-0"	1 3/4"	C	SC WD	STN-1	TEMPERED	SEE A711	ALUM	BLACK	N/A	13/A701	18/A701	25	NOT RATED	
131		3'-0"	7'-0"	1 3/4"	A	HM	PNT-6	N/A	1	HM	PNT-6	N/A	4/A701	4/A701	20	NOT RATED	
132		3'-0"	7'-0"	1 3/4"	A	SC WD	STN-1	N/A	3	HM	PNT-6	TEMPERED	4/A701	9/A701	31	NOT RATED	
132A		3'-0"	7'-0"	1 3/4"	A	SC WD	STN-1	N/A	3	HM	PNT-6	TEMPERED	4/A701	9/A701	31	NOT RATED	
133		3'-0"	7'-0"	1 3/4"	A	SC WD	STN-1	N/A	3	HM	PNT-6	TEMPERED	4/A701	9/A701	24	NOT RATED	
134		3'-0"	7'-0"	1 3/4"	C	SC WD	STN-1	TEMPERED	SEE A711	ALUM	BLACK	N/A	13/A701	18/A701	25	NOT RATED	
135		3'-0"	7'-0"	1 3/4"	C	SC WD	STN-1	TEMPERED	SEE A711	ALUM	BLACK	N/A	13/A701	18/A701	25	NOT RATED	
136		3'-0"	7'-0"	1 3/4"	C	SC WD	STN-1	TEMPERED	SEE A711	ALUM	BLACK	N/A	13/A701	18/A701	25	NOT RATED	
137		3'-0"	7'-0"	1 3/4"	A	SC WD	STN-1	N/A	3	HM	PNT-6	TEMPERED	4/A701	9/A701	24	NOT RATED	
138		3'-0"	7'-0"	1 3/4"	C	SC WD	STN-1	TEMPERED	SEE A711	ALUM	BLACK	N/A	13/A701	18/A701	25	NOT RATED	
139		3'-0"	7'-0"	1 3/4"	C	SC WD	STN-1	TEMPERED	SEE A711	ALUM	BLACK	N/A	13/A701	18/A701	25	NOT RATED	
140		3'-0"	7'-0"	1 3/4"	C	SC WD	STN-1	TEMPERED	SEE A711	ALUM	BLACK	N/A	13/A701	18/A701	25	NOT RATED	
141		3'-0"	7'-0"	1 3/4"	A	HM	PNT-6	N/A	1	HM	PNT-6	N/A	4/A701	4/A701	19	NOT RATED	
142	●	6'-0"	7'-0"	1 3/4"	B	ALUM	BLACK	TEMPERED	SEE A711	ALUM	BLACK	N/A	13/A701	19/A701	5	NOT RATED	
143	●	6'-0"	7'-0"	1 3/4"	B	ALUM	BLACK	TEMPERED	SEE A710	ALUM	BLACK	N/A	12/A701	22/A701	1	NOT RATED	
144		3'-0"	7'-0"	1 3/4"	A	SC WD	STN-1	N/A	1	HM	PNT-6	N/A	4/A701	4/A701	33	NOT RATED	
145		3'-0"	7'-0"	1 3/4"	A	SC WD	STN-1	N/A	1	HM	PNT-6	N/A	4/A701	4/A701	33	NOT RATED	
146		3'-0"	7'-0"	1 3/4"	C	ALUM	BLACK	TEMPERED	SEE A711	ALUM	BLACK	N/A	13/A701	18/A701	30	NOT RATED	
148		3'-0"	7'-0"	1 3/4"	C	SC WD	STN-1	TEMPERED	SEE A711	ALUM	BLACK	N/A	13/A701	18/A701	25	NOT RATED	
149		3'-0"	7'-0"	1 3/4"	C	SC WD	STN-1	TEMPERED	SEE A711	ALUM	BLACK	N/A	13/A701	18/A701	25	NOT RATED	
150		3'-0"	7'-0"	1 3/4"	A	SC WD	STN-1	N/A	1	HM	PNT-6	N/A	4/A701	4/A701	24	NOT RATED	
151		3'-0"	7'-0"	1 3/4"	C	SC WD	STN-1	TEMPERED	SEE A711	ALUM	BLACK	N/A	13/A701	18/A701	25	NOT RATED	
152		3'-0"	7'-0"	1 3/4"	C	SC WD	STN-1	TEMPERED	SEE A711	ALUM	BLACK	N/A	13/A701	18/A701	25	NOT RATED	
153		3'-0"	7'-0"	1 3/4"	A	SC WD	STN-1	N/A	3	HM	PNT-6	TEMPERED	4/A701	9/A701	31	NOT RATED	
153A		3'-0"	7'-0"	1 3/4"	A	SC WD	STN-1	N/A	3	HM	PNT-6	TEMPERED	4/A701	9/A701	31	NOT RATED	
154		3'-0"	7'-0"	1 3/4"	C	SC WD	STN-1	TEMPERED	SEE A711	ALUM	BLACK	N/A	13/A701	18/A701	25	NOT RATED	
155		3'-0"	7'-0"	1 3/4"	A	HM	PNT-6	N/A	2	HM	PNT-6	N/A	3/A701	8/A701	33	NOT RATED	
156		3'-0"	7'-0"	1 3/4"	A	HM	PNT-6	N/A	2	HM	PNT-6	N/A	3/A701	8/A701	33	NOT RATED	
157		3'-0"	7'-0"	1 3/4"	A	HM	PNT-6	N/A	2	HM	PNT-6	N/A	3/A701	8/A701	14	60 MIN	
158		4'-0"	7'-0"	1 3/4"	A	HM	PNT-6	N/A	2	HM	PNT-6	N/A	3/A701	8/A701	13	60 MIN	
159		3'-0"	7'-0"	1 3/4"	A	HM	PNT-6	N/A	1	HM	PNT-6	N/A	4/A701	4/A701	32	NOT RATED	
159A		3'-0"	7'-0"	1 3/4"	A	HM	PNT-6	N/A	1	HM	PNT-6	N/A	4/A701	4/A701	20	NOT RATED	
160	●	3'-0"	7'-0"	1 3/4"	E	HM	PNT-6	N/A	4	HM	PNT-6	N/A	4/A701	4/A701	21	NOT RATED	
161		3'-0"	7'-0"	1 3/4"	A	HM	PNT-6	N/A	1	HM	PNT-6	N/A	4/A701	4/A701	20	NOT RATED	
162		3'-0"	7'-0"	1 3/4"	A	HM	PNT-6	N/A	2	HM	PNT-6	N/A	3/A701	8/A701	9	60 MIN	
162A		3'-0"	7'-0"	1 3/4"	A	HM	PNT-6	N/A	2	HM	PNT-6	N/A	3/A701	8/A701	15	60 MIN	
163	●	3'-0"	7'-0"	1 3/4"	E	HM	PNT-6	N/A	5	HM	PNT-6	N/A	3/A701	8/A701	16	60 MIN	
163A	●	3'-0"	7'-0"	1 3/4"	E	HM	PNT-6	N/A	5	HM	PNT-6	N/A	3/A701	8/A701	16	60 MIN	
164	●	3'-0"	7'-0"	1 3/4"	E	HM	PNT-6	N/A	5	HM	PNT-6	N/A	2/A701	7/A701	16	NOT RATED	
165		3'-0"	7'-0"	1 3/4"	A	HM	PNT-6	N/A	2	HM	PNT-6	N/A	3/A701	8/A701	27	60 MIN	
165A		3'-0"	7'-0"	1 3/4"	A	HM	PNT-6	N/A	2	HM	PNT-6	N/A	2/A701	7/A701	15	NOT RATED	
167		4'-0"	7'-0"	1 3/4"	A	HM	PNT-6	N/A	2	HM	PNT-6	N/A	2/A701	7/A701	17	NOT RATED	
168		4'-0"	7'-0"	1 3/4"	A	HM	PNT-6	N/A	2	HM	PNT-6	N/A	2/A701	7/A701	17	NOT RATED	
170		3'-0"	7'-0"	1 3/4"	A	HM	PNT-6	N/A	2	HM	PNT-6	N/A	1/A701	6/A701	4	NOT RATED	
170A		3'-0"	7'-0"	1 3/4"	A	HM	PNT-6	N/A	2	HM	PNT-6	N/A	4/A701	4/A701	12	NOT RATED	
170B		12'-0"	12'-0"	1 5/8"	H	STL	PREFIN	N/A	-	-	-	N/A	24/A701	23/A701	35	NOT RATED	
170C		12'-0"	12'-0"	1 5/8"	H	STL	PREFIN	N/A	-	-	-	N/A	24/A701	23/A701	35	NOT RATED	
170D		12'-0"	12'-0"	1 5/8"	H	STL	PREFIN	N/A	-	-	-	N/A	24/A701	23/A701	35	NOT RATED	
170E		12'-0"	12'-0"	1 5/8"	H	STL	PREFIN	N/A	-	-	-	N/A	24/A701	23/A701	35	NOT RATED	
170F		3'-0"	7'-0"	1 3/4"	A	HM	PNT-6	N/A	2	HM	PNT-6	N/A	1/A701	6/A701	4	NOT RATED	

NIXA POLICE DEPARTMENT
305 N LEEANN DR
NIXA, MO 65714

112 S. Main St., Nixa, MO 65714 Ph: 417-724-8553

Architecture / Interior Design / Graphics
1401 S. Brentwood Blvd. / Suite 575 / St. Louis, Missouri 63144
314-725-5588 / arch@chiodini.com

Reissue Date

Professional of Record

STATE OF MISSOURI NATHAN P. RAPP NUMBER ARCHITECT

DATE 2025-06-11

Copyright 2025 ©
These prints are the property of the architect and shall be usedonly for the project referenced above

Architect
LMH / NPR

Project #
24-003

Date
2025-06-11

Drawing Title:
DOOR SCHEDULE AND DETAILS

Sheet:
A700

PRINTED: 6/11/2025 11:44:34 AM

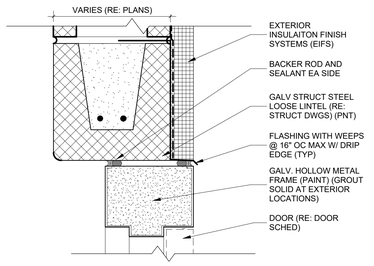

1 HM - 4" HEAD - EIFS ON CMU
3" = 1'-0"

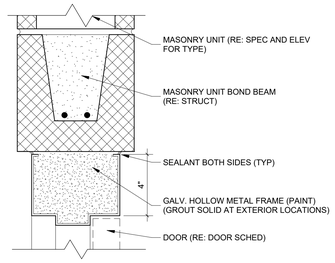

2 HM - 4" HEAD @ CMU
3" = 1'-0"

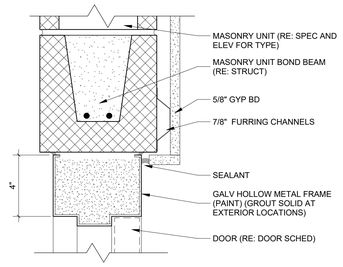

3 HM - 4" HEAD @ CMU W/ FURRING
3" = 1'-0"

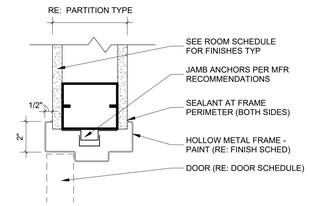

4 HM - HEAD/JAMB - INTERIOR DOOR
3" = 1'-0"

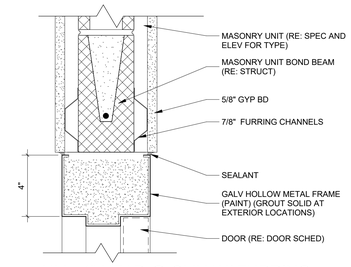

5 HM - 4" HEAD @ CMU W/ FURRING BOTH SIDES
3" = 1'-0"

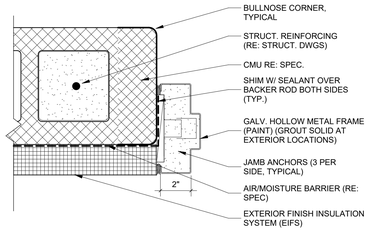

6 JAMB - HM - EIFS ON CMU
3" = 1'-0"

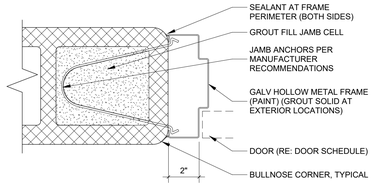

7 HM - 2" JAMB @ CMU
3" = 1'-0"

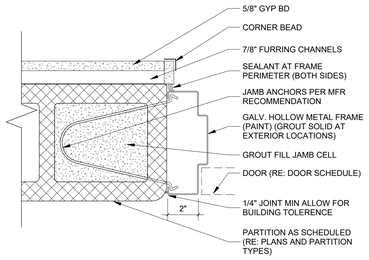

8 HM - 2" JAMB @ CMU W/ FURRING
3" = 1'-0"

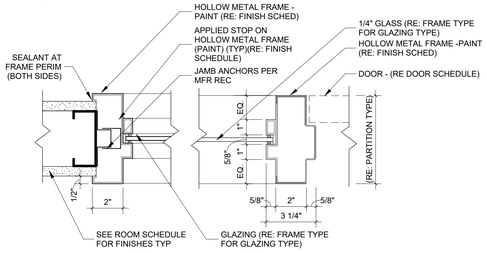

9 HM - HEAD/JAMB - GLAZING
3" = 1'-0"

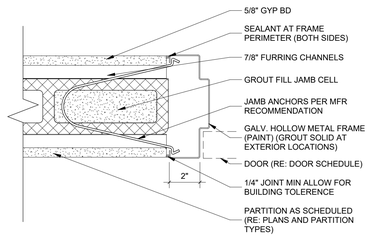

10 HM - 2" JAMB @ CMU W/ FURRING BOTH SIDES
3" = 1'-0"

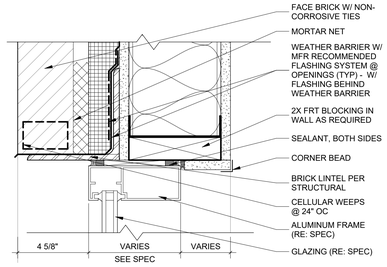

11 SF - EXTERIOR - HEAD @ BRICK
3" = 1'-0"

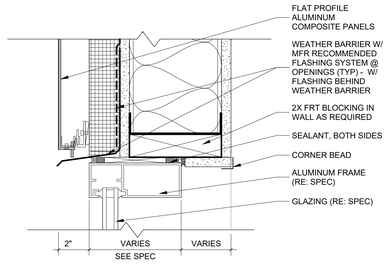

12 SF - EXTERIOR - HEAD @ ACM
3" = 1'-0"

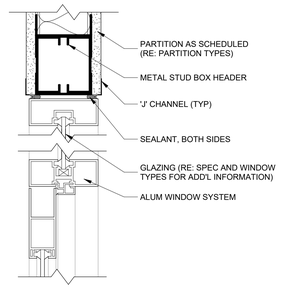

13 SF - INTERIOR - HEAD
3" = 1'-0"

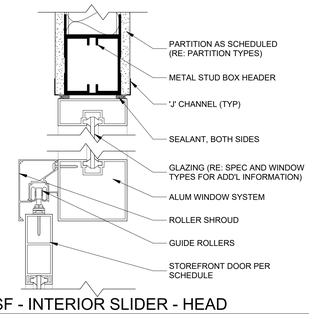

14 SF - INTERIOR SLIDER - HEAD
3" = 1'-0"

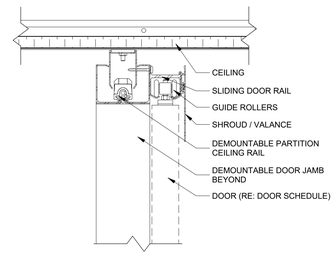

15 DEMOUNTABLE - SLIDER - HEAD
3" = 1'-0"

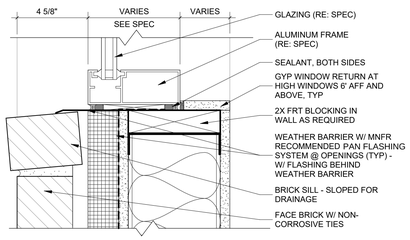

16 SF - EXTERIOR - SILL (WINDOW @ BRICK)
3" = 1'-0"

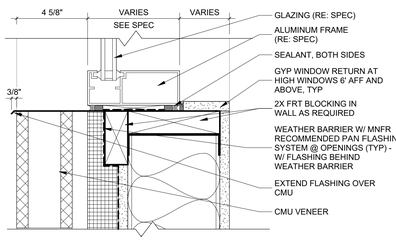

17 SF - EXTERIOR - SILL (WINDOW @ BLOCK)
3" = 1'-0"

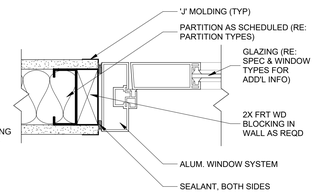

18 SF - INTERIOR - JAMB
3" = 1'-0"

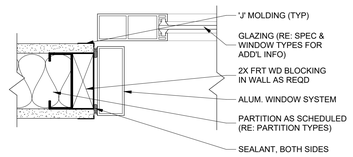

19 SF - INTERIOR SLIDER - JAMB
3" = 1'-0"

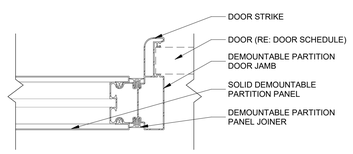

20 DEMOUNTABLE - SLIDER - JAMB
3" = 1'-0"

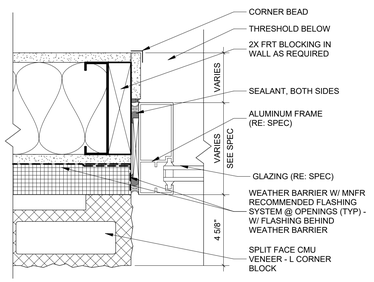

21 SF - EXTERIOR - JAMB AT BLOCK
3" = 1'-0"

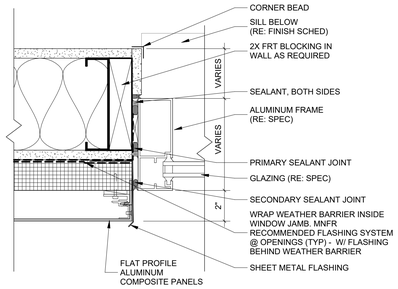

22 SF - EXTERIOR - JAMB @ ACM
3" = 1'-0"

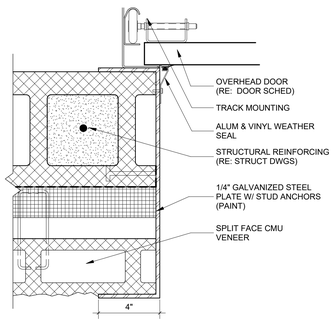

23 OVERHEAD SECTIONAL - JAMB @ CMU
3" = 1'-0"

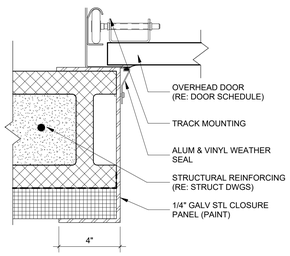

24 OVERHEAD SECTIONAL - HEAD / JAMB @ EIFS
3" = 1'-0"

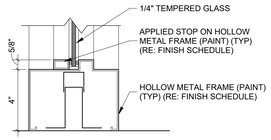

25 HM - SILL - GLAZING
3" = 1'-0"

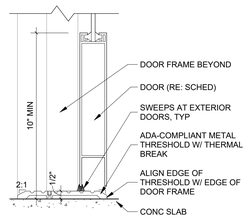

26 THRESHOLD
3" = 1'-0"

NIXA POLICE DEPARTMENT

305 N LEEANN DR
NIXA, MO 65714

INSIGHT DESIGN IDeA ARCHITECTS
112 S. Main St., Nixa, MO 65714 Ph: 417-724-8553

CJD Engineering | Energy | Innovation

olsson

METTEMEYER ENGINEERING LLC

Chiodini ARCHITECTS
Architecture / Interior Design / Graphics
1401 S. Brentwood Blvd. | Suite 275 | St. Louis, Missouri 63144
314-725-5085 | art@chiodini.com

Reissue Date

Professional of Record

STATE OF MISSOURI
NATHAN P. RAPP
NUMBER A-2001038771
ARCHITECT

DATE 2025-06-11

Copyright 2025 ©
These prints are the property of the architect and shall be usedonly for the project referenced above

Architect
LMH / NPR

Project #
24-003

Date
2025-06-11

Drawing Title:
DOOR AND WINDOW DETAILS

Sheet:
A702

PRINTED: 6/11/2025 11:44:38 AM

NOTES:

1. CONTINUOUS GEAR HINGE (NOTE SHOWN), SEE MANUF.

2. HARDWARE PREPARATION AS REQUIRED (NOTE SHOWN), SEE MANUF.

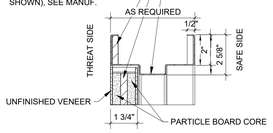

1 HM - HEAD/JAMB - BULLET PROOF INTERIOR DOOR
3" = 1'-0"

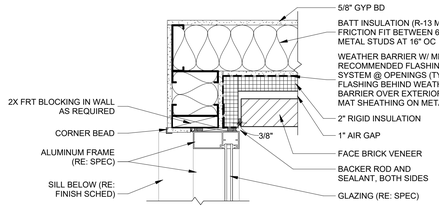

3 GENERIC PLAN DETAIL - STOREFRONT @ BRICK VENEER
1 1/2" = 1'-0"

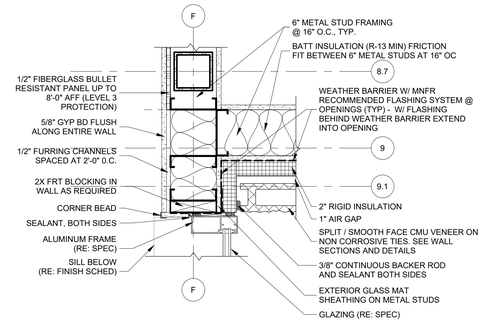

4 HAT CHANNEL EXTERIOR WALL
1 1/2" = 1'-0"

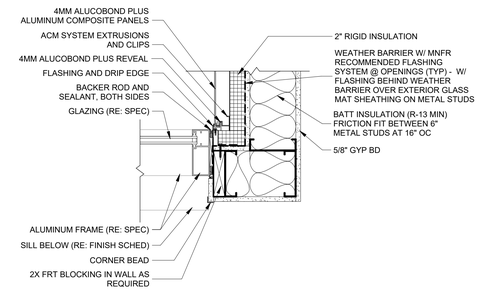

5 DETAIL - STOREFRONT @ FLAT ACM PANEL INSIDE CORNER
1 1/2" = 1'-0"

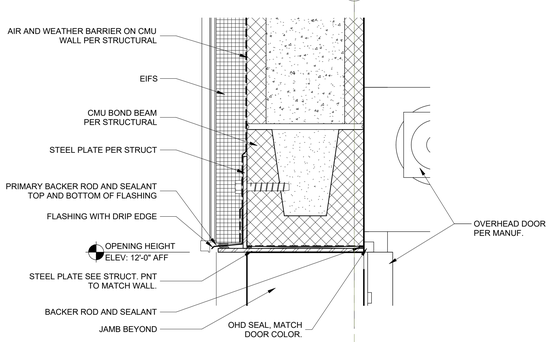

2 DETAIL - OVERHEAD DOOR HEAD @ SALLYPORT
3" = 1'-0"

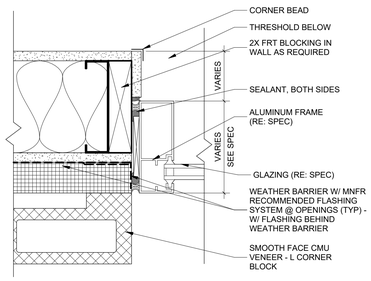

6 SF - EXTERIOR - JAMB @ SMOOTH FACE CMU
3" = 1'-0"

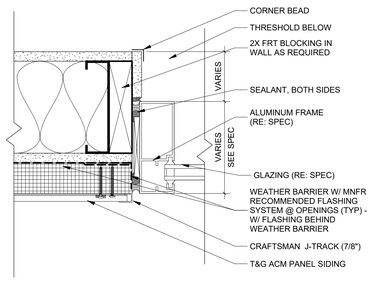

7 SF - EXTERIOR - JAMB @ ACM WOOD LOOK SIDING
3" = 1'-0"

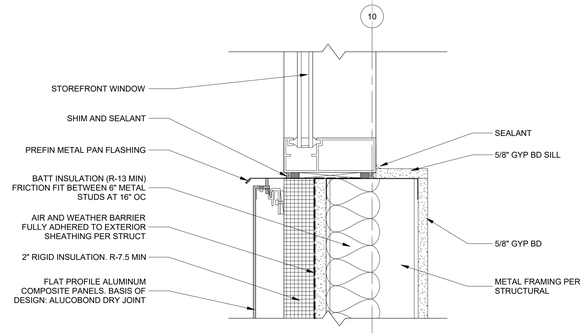

8 DETAIL - HIGH WINDOW SILL @ ACM SIDING
3" = 1'-0"

NOTE:
FIELD ALL WINDOW SILL TO PROVIDE CORRECT DIMENSIONS OF SILL PAN FLASHING

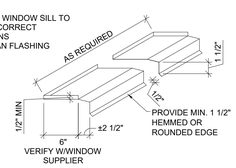

9 ISOMETRIC DETAIL - SILL PAN
1 1/2" = 1'-0"

PRINTED: 6/11/2025 11:44:40 AM

NIXA POLICE DEPARTMENT

305 N LEEANN DR
NIXA, MO 65714

INSIGHT DESIGN IDeA ARCHITECTS
112 S. Main St., Nixa, MO 65714 Ph: 417-724-8553

CJD Engineering | Energy | Innovation

olsson

METTEMEYER ENGINEERING LLC

Chiodini ARCHITECTS
Architecture / Interior Design / Graphics
1401 S. Brentwood Blvd. | Suite 875 | St. Louis, Missouri 63144
314-725-0088 | amy@chiodini.com

Reissue Date

Professional of Record

STATE OF MISSOURI
NATHAN P. RAPP
NUMBER
A-2001038754
ARCHITECT

DATE 2025-06-11

Copyright 2025 ©
These prints are the property of the architect and shall be usedonly for the project referenced above

Architect
LMH / NPR

Project #
24-003

Date
2025-06-11

Drawing Title:
DOOR AND WINDOW DETAILS

Sheet:
A703

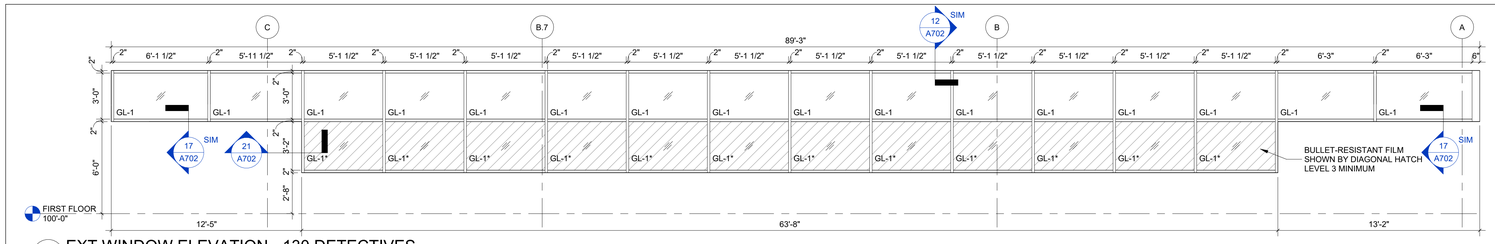

E01 EXT WINDOW ELEVATION - 130 DETECTIVES
1/4" = 1'-0"

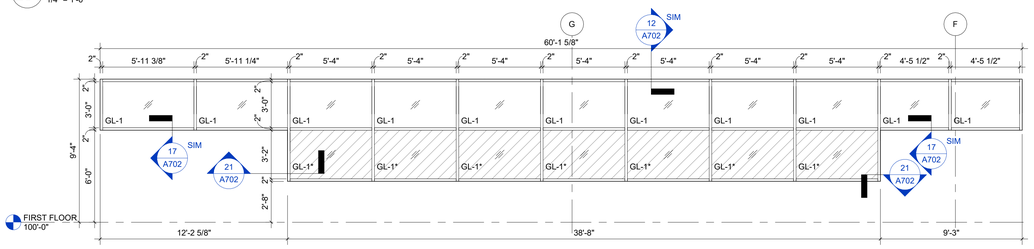

E02 EXT WINDOW ELEVATION - 147 PATROL
1/4" = 1'-0"

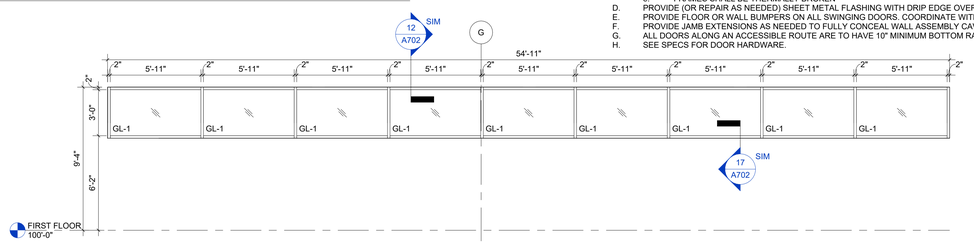

E03 EXT WINDOW ELEVATION - 110 FITNESS / TRAINING
1/4" = 1'-0"

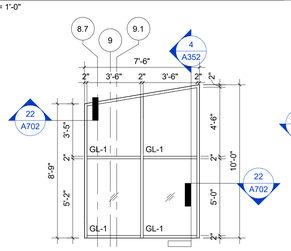

E04 EXT WINDOW ELEVATION - 101 PUBLIC LOBBY UPPER
1/4" = 1'-0"

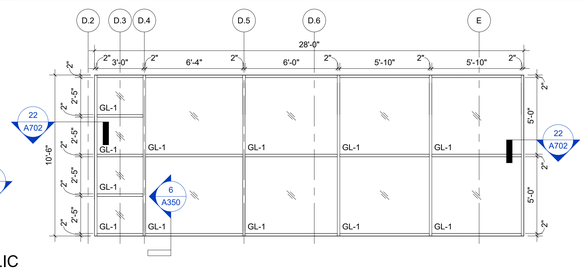

E05 EXT WINDOW ELEVATION - 100 VESTIBULE UPPER
1/4" = 1'-0"

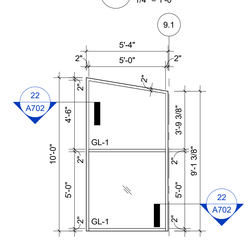

E06 EXT WINDOW ELEVATION - 106 SECURE LOBBY UPPER
1/4" = 1'-0"

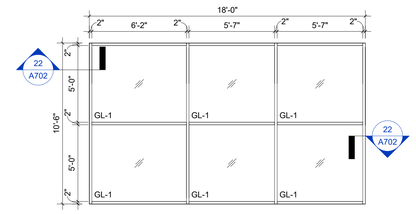

E07 EXT WINDOW ELEVATION - 143A VESTIBULE UPPER
1/4" = 1'-0"

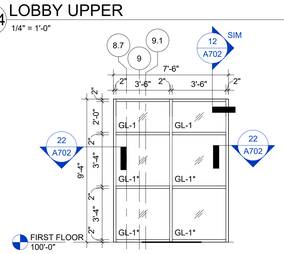

E09 EXT WINDOW ELEVATION - 101 PUBLIC LOBBY LOWER
1/4" = 1'-0"

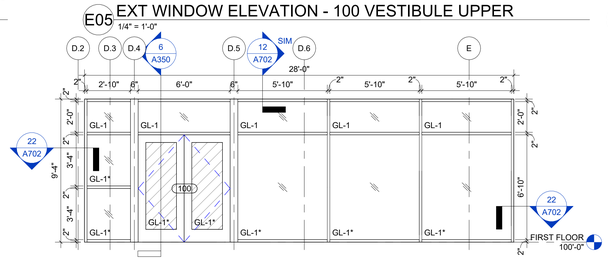

E10 EXT WINDOW ELEVATION - 100 VESTIBULE ENTRY DOORS LOWER
1/4" = 1'-0"

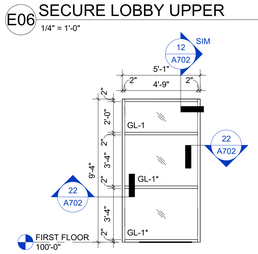

E11 EXT WINDOW ELEVATION - 106 SECURE LOBBY LOWER
1/4" = 1'-0"

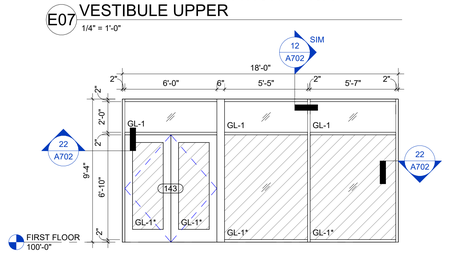

E12 EXT WINDOW ELEVATION - 143A VESTIBULE LOWER
1/4" = 1'-0"

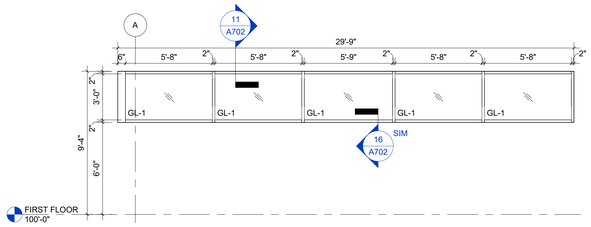

E14 EXT WINDOW ELEVATION - 119 CHIEF AND 120 CAPTAIN
1/4" = 1'-0"

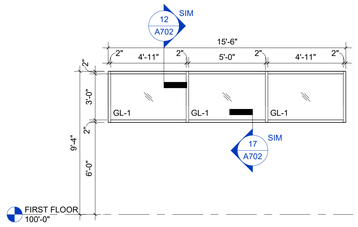

E15 EXT WINDOW ELEVATION - 121 DEPUTY CHIEF
1/4" = 1'-0"

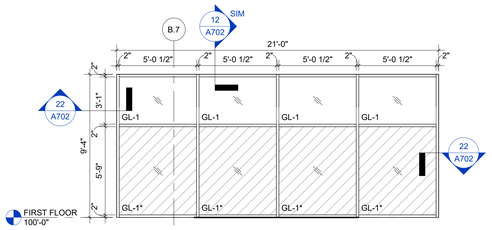

E16 EXT WINDOW ELEVATION - 105 PUBLIC MEETING
1/4" = 1'-0"

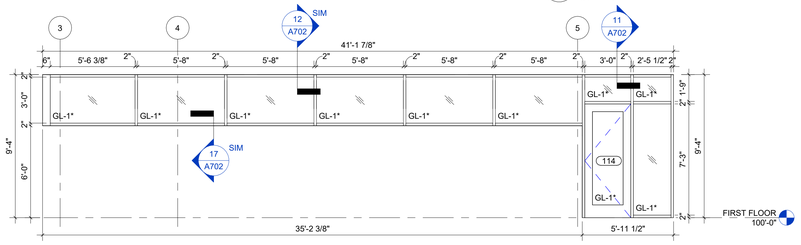

E17 EXT WINDOW ELEVATION - 139 TRAINING, 140 SERGEANT, AND 141 LIEUTENANT
1/4" = 1'-0"

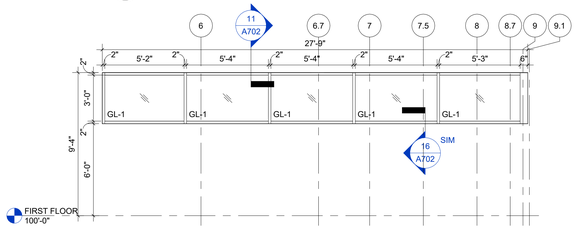

E18 EXT WINDOW ELEVATION - 118 CAPTAIN AND 119 CHIEF
1/4" = 1'-0"

GENERAL DOOR & WINDOW NOTES:

A. REFER TO FLOOR PLANS FOR DOOR SWING DIRECTION
B. ALL DOOR PULLS/HANDLES SHALL BE ADA COMPLIANT. LEVER HANDLES AND DOOR PULLS SHALL BE MOUNTED @ 36" ABOVE BOTTOM OF DOOR TO CENTER OF HANDLE.
C. EXTERIOR FENESTRATION SHALL HAVE THE FOLLOWING U-VALUES AND SHGC VALUES PER IECC REQUIREMENTS:
   a. OPAQUE DOORS
      - SWINING (ASSEMBLY) U-0.61
      - GARAGE DOOR (ASSEMBLY) U-0.31
   b. FENESTRATION - METAL FRAMING
      - FIXED FENESTRATION: U-038
      - OPERABLE FENESTRATION: U-0.45
      - ENTRANCE DOORS: U-0.77
   c. SHGC LIMITS OF FENESTRATION
      - PROJECTION FACTOR > 0.2
        1. NORTH: 0.48
        2. EAST, WEST, & SOUTH: 0.36
      - 0.2 ≤ PROJECTION FACTOR < 0.5
        1. NORTH: 0.53
        2. EAST, WEST, & SOUTH: 0.58
      - PROJECTION FACTOR ≥ 0.5
        1. NORTH: 0.58
        2. EAST, WEST & SOUTH: 0.58
   d. SKYLIGHTS: U-0.50, SHGC-0.40
   e. FRAMES SHALL BE THERMALLY BROKEN
D. PROVIDE (OR REPAIR AS NEEDED) SHEET METAL FLASHING WITH DRIP EDGE OVER THE HEAD OF ALL EXTERIOR DOORS.
E. PROVIDE FLOOR OR WALL BUMPERS ON ALL SWINGING DOORS. COORDINATE WITH ARCHITECT
F. PROVIDE JAMB EXTENSIONS AS NEEDED TO FULLY CONCEAL WALL ASSEMBLY CAVITY AT STONE OR BRICK VENEER
G. ALL DOORS ALONG AN ACCESSIBLE ROUTE ARE TO HAVE 10" MINIMUM BOTTOM RAIL IN COMPLIANCE WITH 2017 ANSI A117.1
H. SEE SPECS FOR DOOR HARDWARE.

GLAZING SCHEDULE

GL-1: CLEAR INSULATED GLAZING UNIT
SOLARBAN 70 (2) SOLARGRAY, LOW E, 1" INSULATING GLASS

GL-2: NOT USED

GL-3: NOT USED

GL-4: CLEAR INTERIOR GLAZING
CLEAR, 1/4" FLOAT GLASS

* = TEMPERED GLASS

= INDICATES WINDOW FILM (WF-1)

= INDICATES BULLET RESISTANT WINDOW FILM

PRINTED: 6/11/2025 11:44:46 AM

NIXA POLICE DEPARTMENT

305 N LEEANN DR
NIXA, MO 65714

INSPIRE DESIGN IDeA ARCHITECTS
112 S. Main St., Nixa, MO 65714 Ph: 417-724-8553

CJD Engineering | Energy | Innovation

olsson

METTEMEYER ENGINEERING LLC

Chiodini ARCHITECTS
Architecture / Interior Design / Graphics
1401 S. Brentwood Blvd. | Suite 925 | St. Louis, Missouri 63144
314-725-0880 | arch@chiodini.com

Reissue Date

Professional of Record

STATE OF MISSOURI
NATHAN P. RAPP
NUMBER A-6101
ARCHITECT

DATE 2025-06-11

Copyright 2025 ©
These prints are the property of the architect and shall be usedonly for the project referenced above

Architect
LMH / NPR

Project #
24-003

Date
2025-06-11

Drawing Title:
WINDOW ELEVATIONS - EXTERIOR

Sheet:
A710

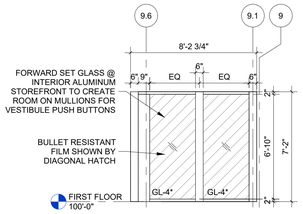

N01 INT WINDOW ELEVATION - 100 VESTIBULE NORTH
1/4" = 1'-0"

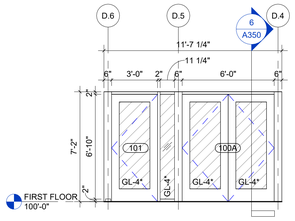

N02 INT WINDOW ELEVATION - 100 VESTIBULE WEST
1/4" = 1'-0"

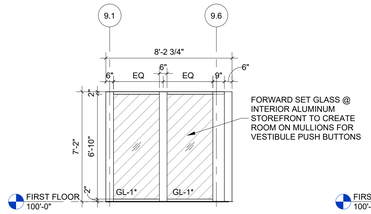

N03 INT WINDOW ELEVATION - 100 VESTIBULE SOUTH
1/4" = 1'-0"

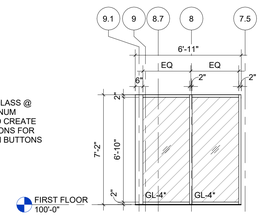

N04 INT WINDOW ELEVATION - 106 SECURE LOBBY
1/4" = 1'-0"

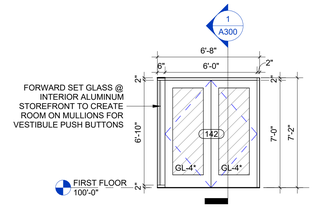

N05 INT WINDOW ELEVATION - 143 VESTIBULE NORTH
1/4" = 1'-0"

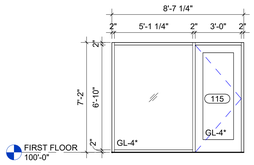

N06 INT WINDOW ELEVATION - 115 ADMIN RECEP
1/4" = 1'-0"

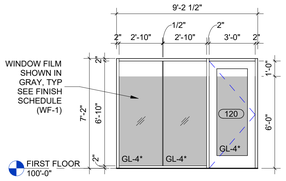

N07 INT WINDOW ELEVATION - 120 DEPUTY CHIEF
1/4" = 1'-0"

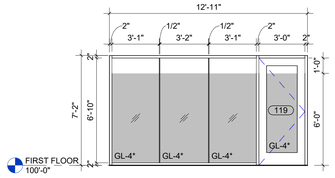

N08 INT WINDOW ELEVATION - 119 CAPTAIN
1/4" = 1'-0"

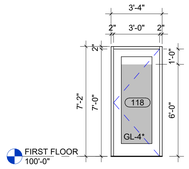

N09 INT WINDOW ELEVATION - 118 CHIEF
1/4" = 1'-0"

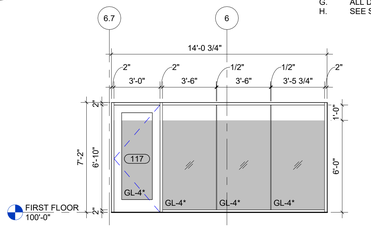

N10 INT WINDOW ELEVATION - 117 CAPTAIN
1/4" = 1'-0"

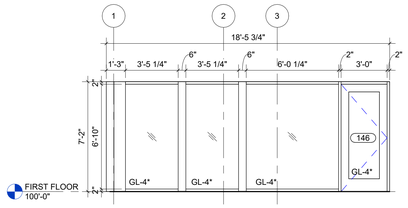

N11 INT WINDOW ELEVATION - 146 BREAK ROOM
1/4" = 1'-0"

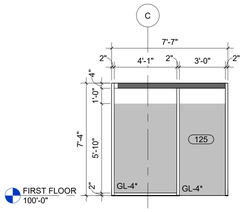

N12 INT WINDOW ELEVATION - 125 POD
1/4" = 1'-0"

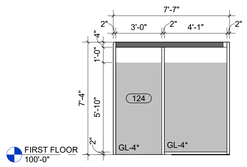

N13 INT WINDOW ELEVATION - 124 POD
1/4" = 1'-0"

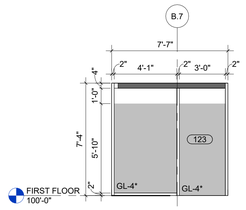

N14 INT WINDOW ELEVATION - 123 POD
1/4" = 1'-0"

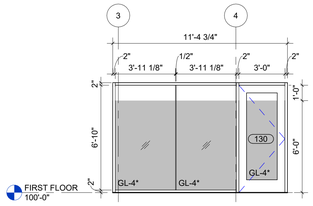

N15 INT WINDOW ELEVATION - 130 LIEUTENANT
1/4" = 1'-0"

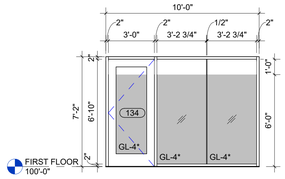

N16 INT WINDOW ELEVATION - 134 SUPPORT SERVICES SUPERVISOR
1/4" = 1'-0"

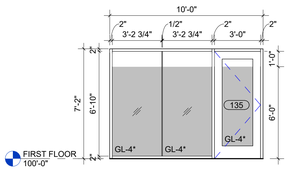

N17 INT WINDOW ELEVATION - 135 SERGEANT
1/4" = 1'-0"

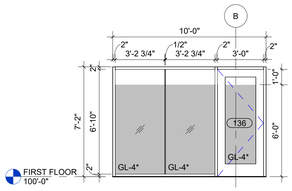

N18 INT WINDOW ELEVATION - 136 DARE OFFICER
1/4" = 1'-0"

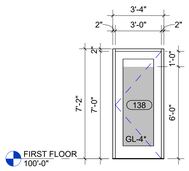

N19 INT WINDOW ELEVATION - 138 TRAINING
1/4" = 1'-0"

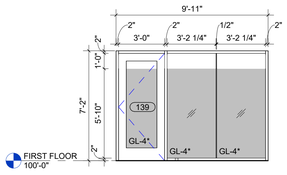

N20 INT WINDOW ELEVATION - 139 SERGEANT
1/4" = 1'-0"

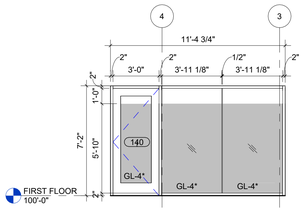

N21 INT WINDOW ELEVATION - 140 LIEUTENANT
1/4" = 1'-0"

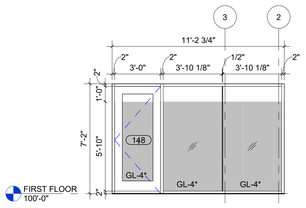

N22 INT WINDOW ELEVATION - 148 LIEUTENANT
1/4" = 1'-0"

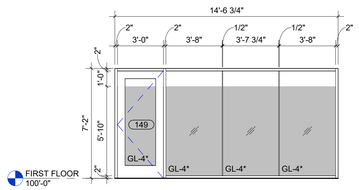

N23 INT WINDOW ELEVATION - 149 SHARED CORPORAL
1/4" = 1'-0"

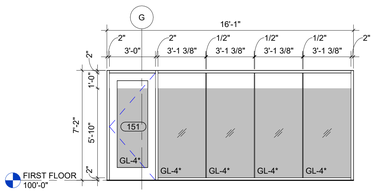

N24 INT WINDOW ELEVATION - 151 SERGEANT
1/4" = 1'-0"

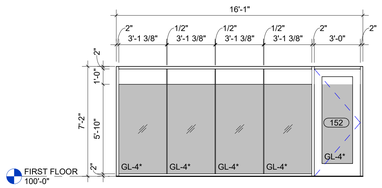

N25 INT WINDOW ELEVATION - 152 SERGEANT
1/4" = 1'-0"

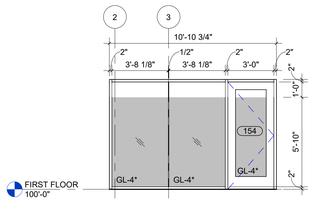

N26 INT WINDOW ELEVATION - 154 LIEUTENANT
1/4" = 1'-0"

GENERAL DOOR & WINDOW NOTES:

A. REFER TO FLOOR PLANS FOR DOOR SWING DIRECTION
B. ALL DOOR PULLS/HANDLES SHALL BE ADA COMPLIANT. LEVER HANDLES AND DOOR PULLS SHALL BE MOUNTED @ 36" ABOVE BOTTOM OF DOOR TO CENTER OF HANDLE.
C. EXTERIOR FENESTRATION SHALL HAVE THE FOLLOWING U-VALUES AND SHGC VALUES PER IECC REQUIREMENTS:
   a. OPAQUE DOORS
      - SWINING (ASSEMBLY) U-0.61
      - GARAGE DOOR (ASSEMBLY) U-0.31
   b. FENESTRATION - METAL FRAMING
      - FIXED FENESTRATION: U-038
      - OPERABLE FENESTRATION: U-0.45
      - ENTRANCE DOORS: U-0.77
   c. SHGC LIMITS OF FENESTRATION
      - PROJECTION FACTOR > 0.2
        1. NORTH: 0.48
        2. EAST, WEST, & SOUTH: 0.36
      - 0.2 ≤ PROJECTION FACTOR < 0.5
        1. NORTH: 0.53
        2. EAST, WEST, & SOUTH: 0.58
      - PROJECTION FACTOR ≥ 0.5
        1. NORTH: 0.58
        2. EAST, WEST & SOUTH: 0.58
   d. SKYLIGHTS: U-0.50, SHGC-0.40
   e. FRAMES SHALL BE THERMALLY BROKEN
D. PROVIDE (OR REPAIR AS NEEDED) SHEET METAL FLASHING WITH DRIP EDGE OVER THE HEAD OF ALL EXTERIOR DOORS.
E. PROVIDE FLOOR OR WALL BUMPERS ON ALL SWINGING DOORS. COORDINATE WITH ARCHITECT
F. PROVIDE JAMB EXTENSIONS AS NEEDED TO FULLY CONCEAL WALL ASSEMBLY CAVITY AT STONE OR BRICK VENEER
G. ALL DOORS ALONG AN ACCESSIBLE ROUTE ARE TO HAVE 10" MINIMUM BOTTOM RAIL IN COMPLIANCE WITH 2017 ANSI A117.1
H. SEE SPECS FOR DOOR HARDWARE.

GLAZING SCHEDULE

GL-1: CLEAR INSULATED GLAZING UNIT
SOLARBAN 70 (2) SOLARGRAY, LOW E, 1" INSULATING GLASS

GL-2: NOT USED

GL-3: NOT USED

GL-4: CLEAR INTERIOR GLAZING
CLEAR, 1/4" FLOAT GLASS

* = TEMPERED GLASS

= INDICATES WINDOW FILM (WF-1)

= INDICATES BULLET RESISTANT WINDOW FILM

NIXA POLICE DEPARTMENT

305 N LEEANN DR
NIXA, MO 65714

INSIGHT DESIGN IDeA ARCHITECTS
112 S. Main St., Nixa, MO 65714 Ph: 417-724-8553

CJD Engineering | Energy | Innovation

olsson

METTEMEYER ENGINEERING LLC

Chiodini ARCHITECTS
Architecture / Interior Design / Graphics
1401 S. Brentwood Blvd. | Suite 570 | St. Louis, Missouri 63144
314-725-0888 | aarti@chiodini.com

Reissue Date

Professional of Record

STATE OF MISSOURI
NATHAN P. RAPP
NUMBER
ARCHITECT

DATE 2025-06-11

Copyright 2025 ©
These prints are the property of the architect and shall be usedonly for the project referenced above

Architect
LMH / NPR

Project #
24-003

Date
2025-06-11

Drawing Title:
WINDOW ELEVATIONS - INTERIOR

Sheet:
A711

PRINTED: 6/11/2025 11:44:53 AM

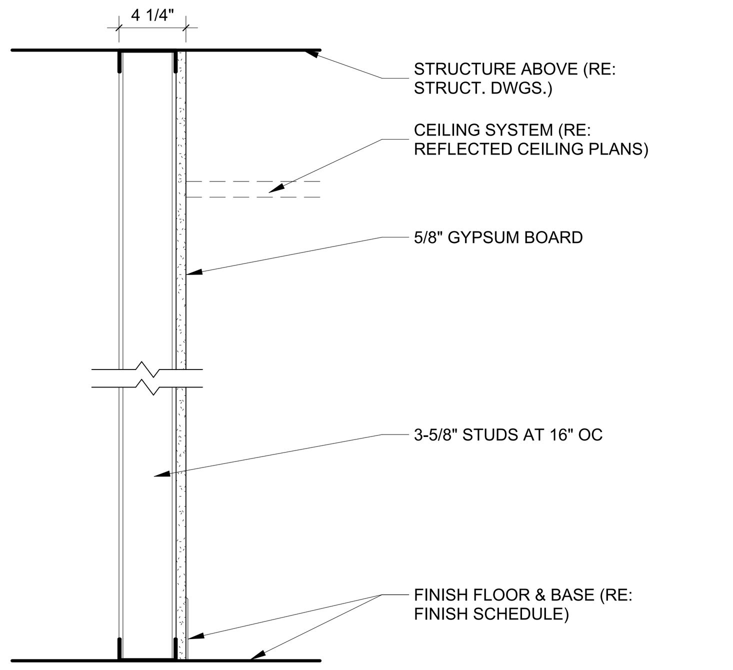

SECTION

NOT FIRE RATED

3-5/8" STEEL STUDS @ 16" OC, TOP TRACK, AND BOTTOM TRACK MIN 0.018 INCH THICH GALV STEEL ATTACHED TO FLOOR AND CEILING WITH FASTENERS SPACED 24" OC MAX. STUDS TO BE CUT 3/8" TO 3/4" LESS THAN ASSEMBLY HEIGHT. APPLY (1) LAYER 5/8" GYPSUM BOARD ON ONE SIDE WITH 1" LONG TYPE S STEEL SCREWS @ 8" OC.

S30 4 1/4" PARTITION

SCALE: 1 1/2" = 1'-0"

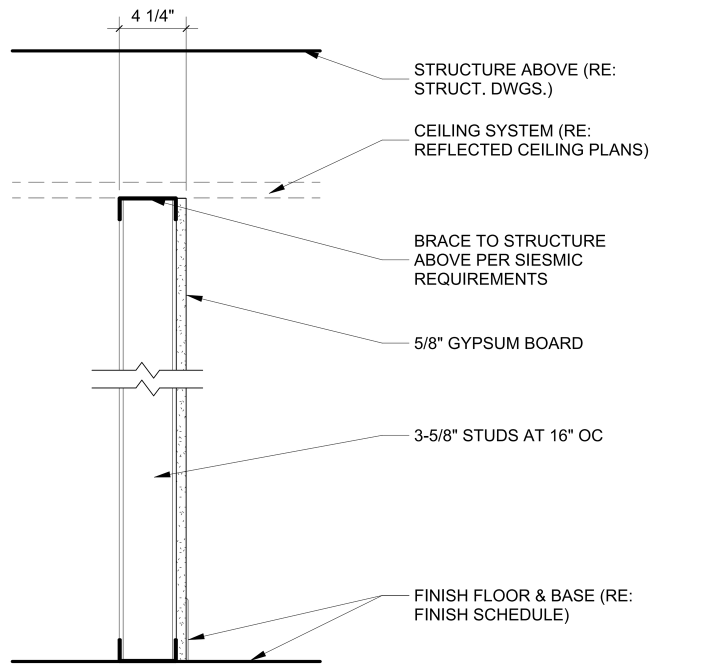

SECTION

NOT FIRE RATED

3-5/8" STEEL STUDS @ 16" OC, TOP TRACK, AND BOTTOM TRACK MIN 0.018 INCH THICH GALV STEEL ATTACHED TO FLOOR AND CEILING WITH FASTENERS SPACED 24" OC MAX. STUDS TO BE CUT 3/8" TO 3/4" LESS THAN ASSEMBLY HEIGHT. APPLY (1) LAYER 5/8" GYPSUM BOARD ON ONE SIDE WITH 1" LONG TYPE S STEEL SCREWS @ 8" OC.

S30b 4 1/4" PARTITION

SCALE: 1 1/2" = 1'-0"

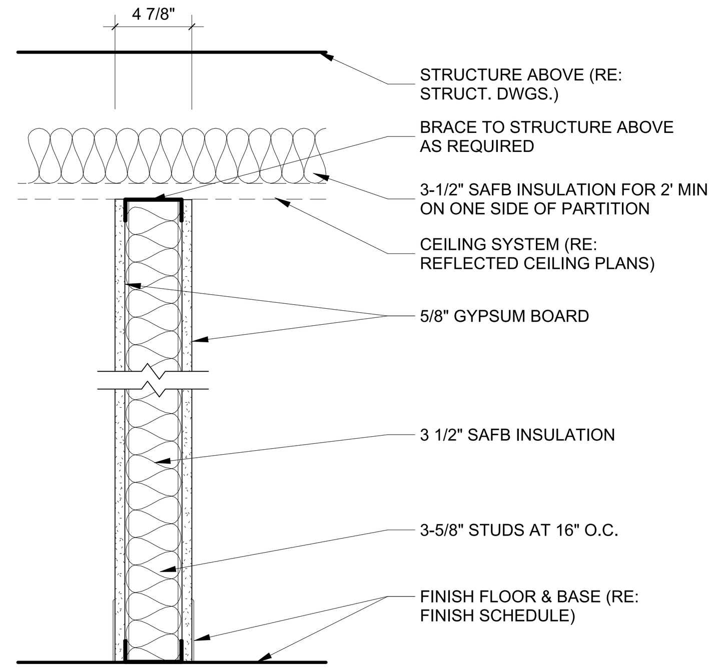

SECTION

NOT FIRE RATED

3-5/8" STEEL STUDS @ 16" OC, TOP TRACK, AND BOTTOM TRACK MIN 0.018 INCH THICH GALV STEEL ATTACHED TO FLOOR AND CEILING WITH FASTENERS SPACED 24" OC MAX. STUDS TO BE CUT 3/8" TO 3/4" LESS THAN ASSEMBLY HEIGHT. APPLY (1) LAYER 5/8" GYPSUM BOARD ON EACH SIDE WITH 1" LONG TYPE S STEEL SCREWS @ 8" OC. PROVIDE 3-1/2" SOUND ATTENUATION FIRE BLANKET INSULATION BETWEEN STUDS. PROVIDE 3-1/2" SOUND ATTENUATION FIRE BLANKET INSULATION ABOVE CEILING SYSTEM FOR MINIMUM 24" ON GYPSUM BOARD SIDE OF THE PARTITION.

S31ab 4 7/8" PARTITION

SCALE: 1 1/2" = 1'-0"

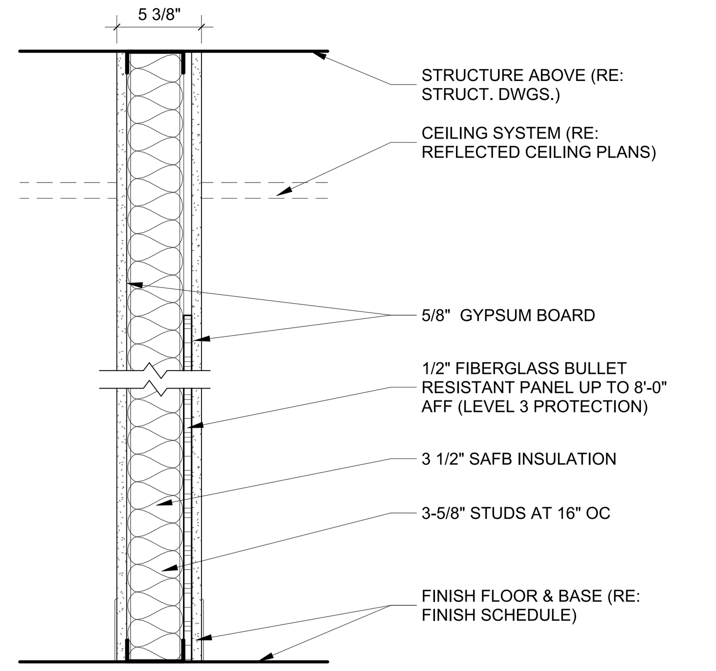

SECTION

NOT FIRE RATED

3-5/8" STEEL STUDS @ 16" OC, TOP TRACK, AND BOTTOM TRACK MIN 0.018 INCH THICK GALV STEEL ATTACHED TO FLOOR AND CEILING WITH FASTENERS SPACED 24" OC MAX. STUDS TO BE CUT 3/8" TO 3/4" LESS THAN ASSEMBLY HEIGHT. APPLY (1) LAYER OF 1/2" FIBERGLASS ARMORTEX BULLETPROOF PANEL UP TO 8'-0" AFF. (OR SIMILAR UL752 LISTED BULLET RESISTANT PANEL). FASTEN WITH 1" SELF-TAPPING GALVANIZED SCREWS. JOINTS BETWEEN BULLETPROOF PANEL SHOULD BE BACKED BY A BATTEN STRIP CUT FROM A FULL SHEET. APPLY (1) LAYER 5/8" GYPSUM BOARD ON EACH SIDE WITH 1" LONG TYPE S STEEL SCREWS @ 8" OC. LAYER OF GYPSUM BOARD OVER FIBERGLASS PANEL SHOULD BE FASTENED WITH 1-1/4" SELF-TAPPING GALVANIZED SCREWS @ 8" OC. PROVIDE SOUND ATTENUATION FIRE BLANKETS BETWEEN STUDS.

S31ac 5 3/8" PARTITION

SCALE: 1 1/2" = 1'-0"

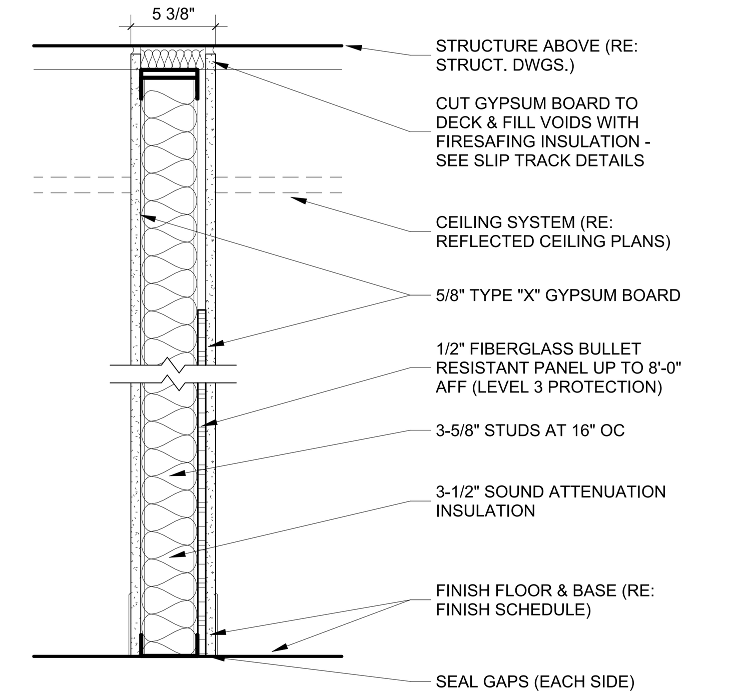

SECTION

1 HOUR FIRE RATED - UL LISTING: U419

3-5/8" STEEL STUDS @ 16" OC, TOP TRACK, AND BOTTOM TRACK MIN 0.018 INCH THICK GALV STEEL ATTACHED TO FLOOR AND CEILING WITH FASTENERS SPACED 24" OC MAX. STUDS TO BE CUT 3/8" TO 3/4" LESS THAN ASSEMBLY HEIGHT. APPLY (1) LAYER OF 1/2" FIBERGLASS ARMORTEX BULLETPROOF PANEL UP TO 8'-0" AFF. (OR SIMILAR UL752 LISTED BULLET RESISTANT PANEL). FASTEN WITH 1" SELF-TAPPING GALVANIZED SCREWS. JOINTS BETWEEN BULLET PROOF PANELS SHOULD BE BACKED BY A BATTEN STRIP CUT FROM A FULL SHEET. APPLY (1) LAYER 5/8" GYPSUM BOARD ON EACH SIDE WITH 1" LONG TYPE S OR S-12 STEEL SCREWS @ 8" OC ALONG HORIZONTAL EDGES OR ALONG VERTICAL AND BOTTOM EDGES AND @ 12" OC IN THE FIELD WHEN PANELS ARE APPLIED VERTICALLY. PROVIDE 3-1/2" SOUND ATTENUATION FIRE BATT INSULATION BETWEEN STUDS.

1S31ac 5 3/8" PARTITION

SCALE: 1 1/2" = 1'-0"

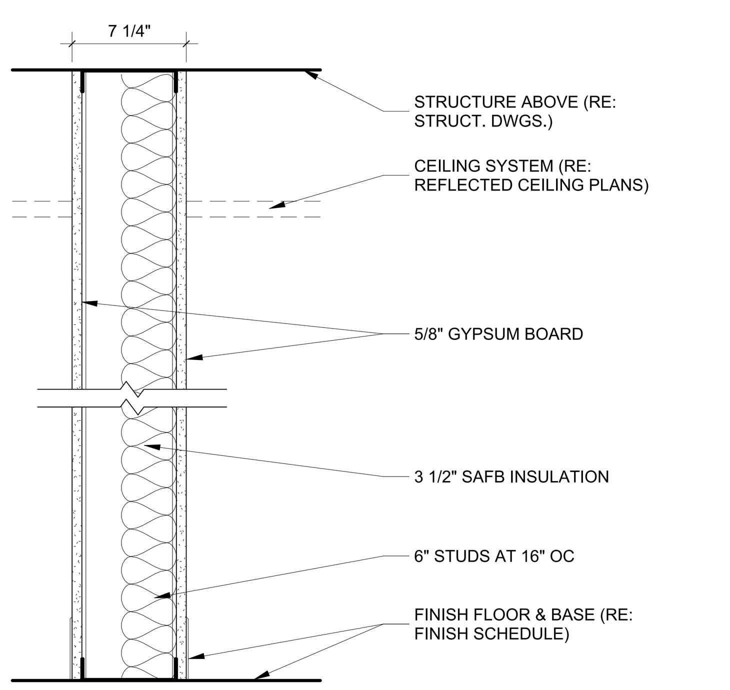

SECTION

NOT FIRE RATED

6" STEEL STUDS @ 16" OC, TOP TRACK, AND BOTTOM TRACK MIN 0.018 INCH THICK GALV STEEL ATTACHED TO FLOOR AND CEILING WITH FASTENERS SPACED 24" OC MAX. STUDS TO BE CUT 3/8" TO 3/4" LESS THAN ASSEMBLY HEIGHT. APPLY (1) LAYER 5/8" GYPSUM BOARD ON EACH SIDE WITH 1" LONG TYPE S STEEL SCREWS @ 8" OC. PROVIDE 3-1/2" SOUND ATTENUATION FIRE BLANKET INSULATION BETWEEN STUDS.

S61a 7 1/4" PARTITION

SCALE: 1 1/2" = 1'-0"

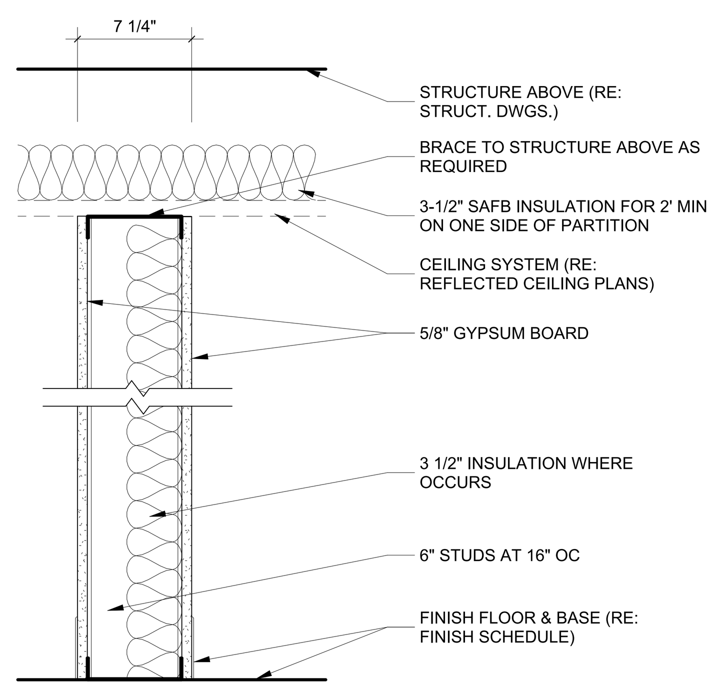

SECTION

NOT FIRE RATED

6" STEEL STUDS @ 16" OC, TOP TRACK, AND BOTTOM TRACK MIN 0.018 INCH THICK GALV STEEL ATTACHED TO FLOOR AND CEILING WITH FASTENERS SPACED 24" OC MAX. STUDS TO BE CUT 3/8" TO 3/4" LESS THAN ASSEMBLY HEIGHT. APPLY (1) LAYER 5/8" GYPSUM BOARD ON EACH SIDE WITH 1" LONG TYPE S STEEL SCREWS @ 8" OC. PROVIDE 3-1/2" SOUND ATTENUATION FIRE BLANKET INSULATION BETWEEN STUDS. PROVIDE 3-1/2" SOUND ATTENUATION FIRE BLANKET INSULATION ABOVE CEILING SYSTEM FOR MINIMUM 24" ON BOTH SIDES OF THE PARTITION.

S61ab 7 1/4" PARTITION

SCALE: 1 1/2" = 1'-0"

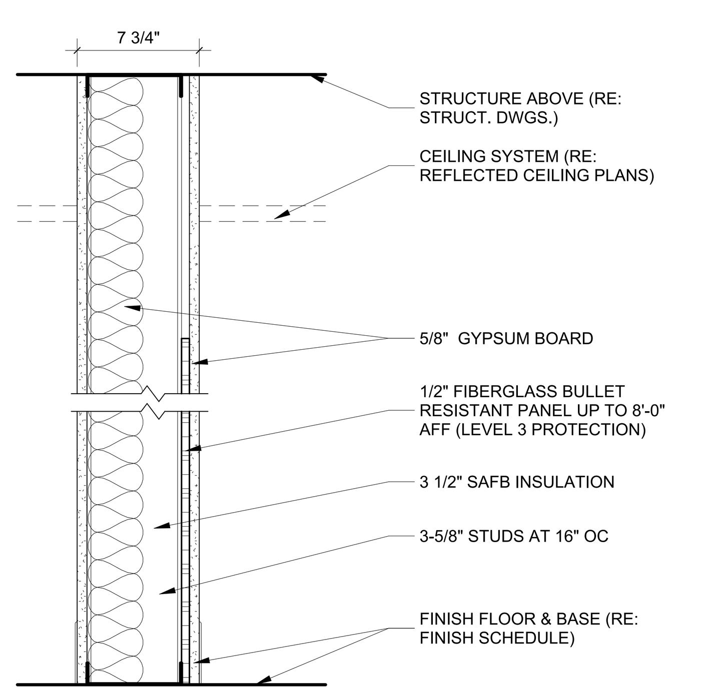

SECTION

NOT FIRE RATED

6" STEEL STUDS @ 16" OC, TOP TRACK, AND BOTTOM TRACK MIN 0.018 INCH THICK GALV STEEL ATTACHED TO FLOOR AND CEILING WITH FASTENERS SPACED 24" OC MAX. STUDS TO BE CUT 3/8" TO 3/4" LESS THAN ASSEMBLY HEIGHT. APPLY (1) LAYER OF 1/2" FIBERGLASS ARMORTEX BULLETPROOF PANEL UP TO 8'-0" AFF. (OR SIMILAR UL752 LISTED BULLET RESISTANT PANEL). FASTEN WITH 1" SELF-TAPPING GALVANIZED SCREWS. JOINTS BETWEEN BULLETPROOF PANEL SHOULD BE BACKED BY A BATTEN STRIP CUT FROM A FULL SHEET. APPLY (1) LAYER 5/8" GYPSUM BOARD ON EACH SIDE WITH 1" LONG TYPE S STEEL SCREWS @ 8" OC. LAYER OF GYPSUM BOARD OVER FIBERGLASS PANEL SHOULD BE FASTENED WITH 1-1/4" SELF-TAPPING GALVANIZED SCREWS @ 8" OC. PROVIDE SOUND ATTENUATION FIRE BLANKETS BETWEEN STUDS.

S61ac 7 3/4" PARTITION

SCALE: 1 1/2" = 1'-0"

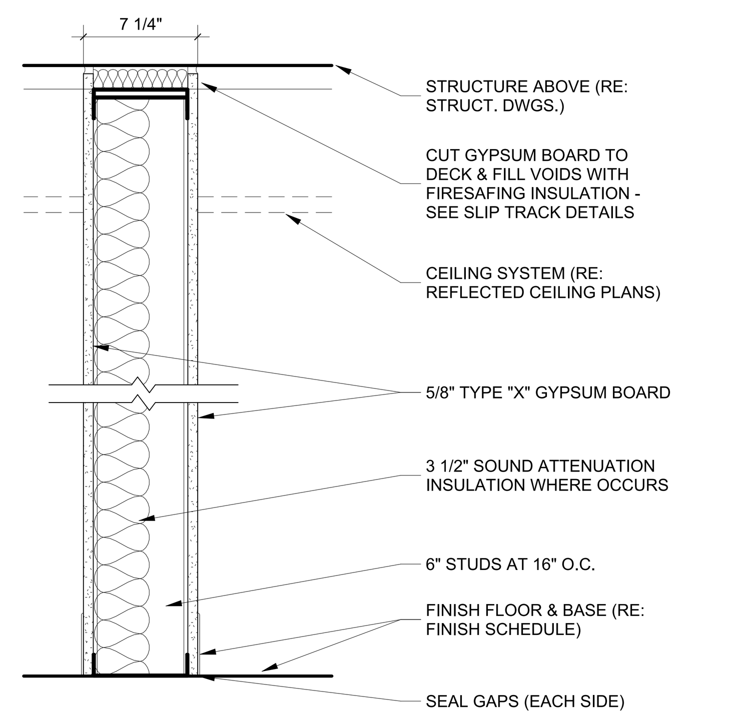

SECTION

1 HOUR FIRE RATED - UL LISTING: U419

6" STEEL STUDS @ 16" OC, TOP TRACK, AND BOTTOM TRACK MIN 0.018 INCH THICH GALV STEEL ATTACHED TO FLOOR AND CEILING WITH FASTENERS SPACED 24" OC MAX. STUDS TO BE CUT 3/8" TO 3/4" LESS THAN ASSEMBLY HEIGHT. APPLY (1) LAYER 5/8" GYPSUM BOARD ON EACH SIDE WITH 1" LONG TYPE S OR S-12 STEEL SCREWS @ 8" OC ALONG HORIZONTAL EDGES OR ALONG VERTICAL AND BOTTOM EDGES AND @ 12" OC IN THE FIELD WHEN PANELS ARE APPLIED VERTICALLY. PROVIDE 3-1/2" SOUND ATTENUATION FIRE BATT INSULATION BETWEEN STUDS.

1S61a 7 1/4" PARTITION

SCALE: 1 1/2" = 1'-0"

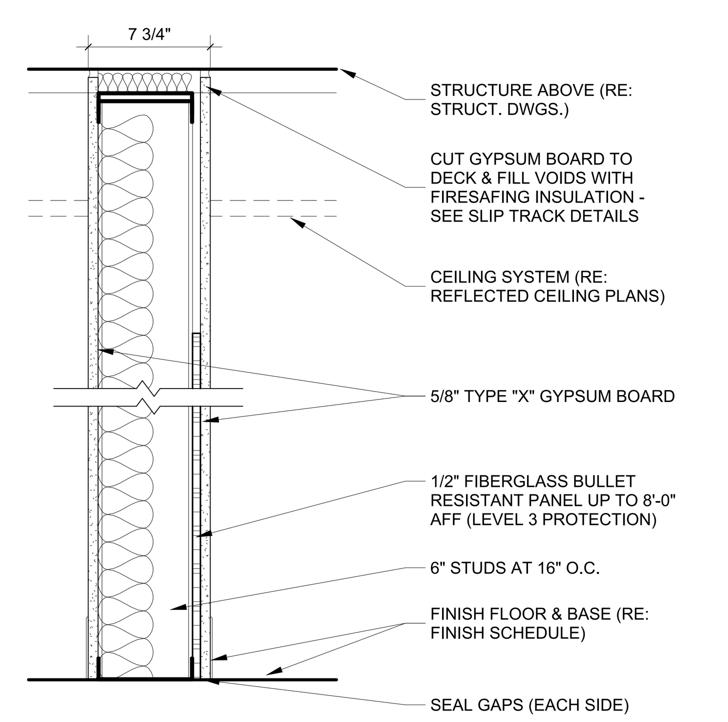

SECTION

1 HOUR FIRE RATED - UL LISTING: U419

6" STEEL STUDS @ 16" OC, TOP TRACK, AND BOTTOM TRACK MIN 0.018 INCH THICK GALV STEEL ATTACHED TO FLOOR AND CEILING WITH FASTENERS SPACED 24" OC MAX. STUDS TO BE CUT 3/8" TO 3/4" LESS THAN ASSEMBLY HEIGHT. APPLY (1) LAYER OF 1/2" FIBERGLASS ARMORTEX BULLETPROOF PANEL UP TO 8'-0" AFF. (OR SIMILAR UL752 LISTED BULLET RESISTANT PANEL). FASTEN WITH 1" SELF-TAPPING GALVANIZED SCREWS. JOINTS BETWEEN BULLET PROOF PANELS SHOULD BE BACKED BY A BATTEN STRIP CUT FROM A FULL SHEET. APPLY (1) LAYER 5/8" GYPSUM BOARD ON EACH SIDE WITH 1" LONG TYPE S OR S-12 STEEL SCREWS @ 8" OC ALONG HORIZONTAL EDGES OR ALONG VERTICAL AND BOTTOM EDGES AND @ 12" OC IN THE FIELD WHEN PANELS ARE APPLIED VERTICALLY. PROVIDE 3-1/2" SOUND ATTENUATION FIRE BATT INSULATION BETWEEN STUDS.

1S61ac 7 3/4" PARTITION

SCALE: 1 1/2" = 1'-0"

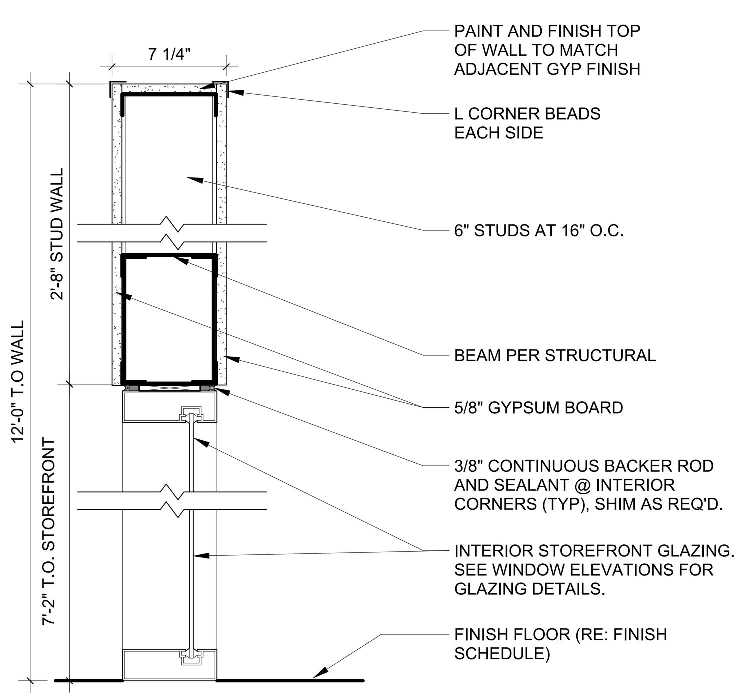

SECTION

NOT FIRE RATED

6" STEEL STUDS @ 16" OC, TOP TRACK, AND BOTTOM TRACK MIN 0.018 INCH THICK GALV STEEL ATTACHED TO T.O. INTERIOR STOREFRONT AND CEILING WITH FASTENERS SPACED 24" OC MAX. STUDS TO BE CUT 3/8" TO 3/4" LESS THAN ASSEMBLY HEIGHT. APPLY (1) LAYER 5/8" GYPSUM BOARD ON EACH SIDE WITH 1" LONG TYPE S STEEL SCREWS @ 8" OC.

S61 7 1/4" PARTITION @ LOBBY INTERIOR STOREFRONT

SCALE: 1 1/2" = 1'-0"

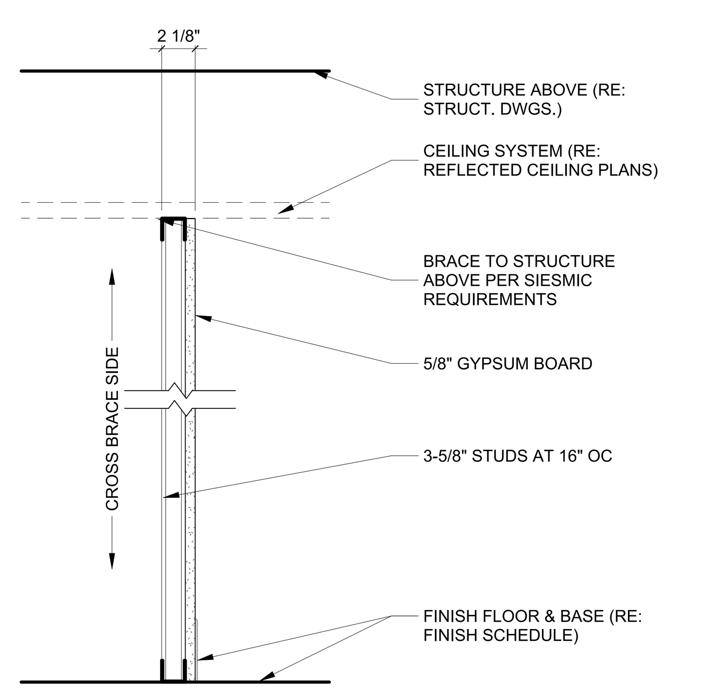

SECTION

NOT FIRE RATED

1 1/2" STEEL STUDS @ 16" OC, TOP TRACK, AND BOTTOM TRACK MIN 0.018 INCH THICH GALV STEEL ATTACHED TO FLOOR AND CEILING WITH FASTENERS SPACED 24" OC MAX. STUDS TO BE CUT 3/8" TO 3/4" LESS THAN ASSEMBLY HEIGHT. APPLY (1) LAYER 5/8" GYPSUM BOARD ON ONE SIDE WITH 1" LONG TYPE S STEEL SCREWS @ 8" OC.

S00 4 1/4" PARTITION

SCALE: 1 1/2" = 1'-0"

PRINTED: 6/11/2025 11:44:56 AM

GENERAL PARTITION TYPE NOTES:

A. REFER TO ARCHITECTURAL FLOOR PLANS FOR PARTITION TYPE DESIGNATIONS.
B. PROVIDE TYPE-X GYPSUM BOARD FOR 1/2" AND 5/8" GYPSUM BOARD, REGARDLESS OF RATING REQUIREMENT.
C. PROVIDE IMPACT RESISTANT GYPSUM BOARD AT STAIR, RAMP AND CORRIDOR WALLS, UNLESS NOTED OTHERWISE.

CODE/LIFE SAFETY

D. CONTRACTOR TO VERIFY **EXISTING WALL** FIRE AND SMOKE RATINGS, AS INDICATED IN DOCUMENTS, COMPLY WITH CODE FOR LABELED RATING. ARCHITECT TO BE NOTIFIED IF EXISTING RATED WALLS HAVE NOT BEEN CONSTRUCTED TO COMPLY WITH CODE REQUIREMENTS AND SHALL MODIFY OR REBUILD DEFICIENT WALLS TO MEET CODE REQUIREMENTS.
E. CONTRACTOR TO VERIFY **EXISTING WALL** FIRE AND SMOKE RATED OPENINGS, AS INDICATED IN DOCUMENTS, COMPLY WITH CODE FOR LABELED RATING. ARCHITECT TO BE NOTIFIED IF EXISTING RATED WALL OPENINGS ARE UNPROTECTED, OR IMPROPERLY PROTECTED, TO COMPLY WITH CODE REQUIREMENTS AND SHALL INSTALL, MODIFY OR REPLACE OPENINGS PROTECTION TO MEET CODE REQUIREMENTS
F. REFER TO CODE DATA/LIFE SAFETY CONTRACT DOCUMENTS FOR ADDITIONAL FIRE RATINGS, SMOKE PARTITION LOCATIONS, INFORMATION AND REQUIREMENTS.
G. CONTRACTOR SHALL BE RESPONSIBLE FOR PROVIDING RATED ASSEMBLIES AS INDICATED IN CONTRACT DOCUMENTS AND PER ALL LOCAL AND JURISDICTIONAL CODES IN FORCE.
H. FIRE WALLS, PARTITIONS AND BARRIERS SHALL NOT BE PENETRATED EXCEPT AS ALLOWED AND PROTECTED BY CODE REQUIREMENTS. THE APPROPRIATE USE OF FIRE STOPPING, DAMPERS, FIRE RESISTIVE MATERIALS, METHODS OF CONSTRUCTION, ETC MUST BE ENFORCED.
I. PROVIDE STRUCTURAL STEEL PROTECTION AS REQUIRED BY CODE (TYPICAL).
J. PROVIDE FURRING AT STRUCTURAL ELEMENTS AS REQUIRED TO SEAL GYPSUM BOARD TIGHT TO STRUCTURAL DECK OR EXTERIOR WALL TO MAINTAIN REQUIRED SMOKE BARRIER AND FIRE RATED PARTITION RATINGS.

GYPSUM WET WALLS AND BACKER BOARD

K. PLUMBING WET WALLS AND TYPICAL TILE FACED WALL SURFACES TO USE TYPE-X WATER-RESISTANT GYPSUM BOARD, INCLUDING BUT NOT LIMITED TO, DRINKING FOUNTAIN WALLS, REST ROOM PLUMBING WALLS OR FOOD SERVING COUNTERS.
L. TILE FACED WALLS SURFACES SUBJECT EXCESSIVE WATER OR "BACK OF HOUSE HOSE DOWN" AREAS, INCLUDING BUT NOT LIMITED TO, KITCHENS, DISH ROOMS, CUSTODIAL CLOSET, SHALL USE CEMENTITIOUS BACKER BOARD IN LIEU OF WATER-RESISTANT GYPSUM BOARD. INSTALL 6 MIL POLYETHYLENE MEMBRANE VAPOR BARRIER BEHIND CEMENT BACKER BOARD, SEAL ALL SEAMS WITH APPROVED TAPE.

INTERIOR METAL STUD LIMITING HEIGHT SCHEDULE

STUD SIZE	STUD SPACING	ALLOWABLE Δ	LIMITING HEIGHT
1 5/8"	16" O.C.	L/240	8'-10" MAX HGT.
1 5/8"	24" O.C.	L/240	7'-9" MAX HGT.
2 1/2"	16" O.C.	L/240	12'-3" MAX HGT.
2 1/2"	24" O.C.	L/240	10'-8" MAX HGT.
3 5/8"	16" O.C.	L/240	16'-3" MAX HGT.
3 5/8"	24" O.C.	L/240	14'-3" MAX HGT.
4"	16" O.C.	L/240	17'-7" MAX HGT.
4"	24" O.C.	L/240	15'-4" MAX HGT.
6"	16"O.C.	L/240	24'-1" MAX HGT.
6"	24" O.C.	L/240	20'-1" MAX HGT.

NOTES:
1. THE ABOVE LIMITING HEIGHTS ARE BASED ON THE CLARKDEITRICH PROSTUD (PROSTUD 33MIL) (5.0 PSF), NON-COMPOSITE WALL (FULLY BRACED), CONTRACTOR TO VERIFY LIMITING HEIGHTS BASED ON MANUFACTURER OF STUD PROVIDED FOR PROJECT.

PARTITION TAG DESIGNATIONS

XS31a
- FIRE RATING (IF ANY)
- STRUCTURE TYPE
- STRUCTURE SIZE
- SHEATHING/CONSTRUCTION
- MODIFIER (IF ANY)

FIRE RATING:
1 = 1 HOUR
2 = 2 HOUR
3 = 3 HOUR
4 = 4 HOUR

STRUCTURE TYPE:
C = CONCRETE
H = SHAFT WALL
M = CMU
S = STEEL STUDS
W = WOOD STUDS

STRUCTURE SIZE:
CMU:
4 = 3-5/8"
8 = 7-5/8"
12 = 11-5/8"

SHAFT STUDS:
2 = 2-1/2"
4 = 4"

STEEL STUDS:
0 = 7/8" OR 1-1/2"
1 = 1-5/8"
2 = 2-1/2"
3 = 3-5/8"
4 = 4"
6 = 6"
8 = 8"

WOOD STUDS:
4 = 2x4
6 = 2x6
8 = 2x8

CONCRETE: NOMINAL WIDTH OF WALL

SHEATHING CONSTRUCTION:
NONE = NO SHEATHING
0 = ONE LAYER OF SHEATHING, ONE SIDE
1 = ONE LAYER OF SHEATHING EACH SIDE
2 = TWO LAYERS OF SHEATHING EACH SIDE

MODIFIERS:
a = PROVIDE SAFB INSULATION, FRICTION FIT, FULL HEIGHT OF WALL AND EXTEND SAFB 2'-0" ON EACH SIDE OF WALL ABOVE CEILING
b = PROVIDE DIAGONAL BRACING TO STRUCTURE ABOVE
c = PROVIDE BULLET RESISTANT PANEL TO PUBLIC SIDE OF WALL UNDERNEATH GYP BD LAYER. PANELS SHOULD BE LEVEL 3 BALLISTIC PROTECTION RATING OR BETTER.
d = PROVIDE 3 5/8" METAL STUDS AT 16" OC IN LIEU OF FURRING CHANNEL
e = UNIQUE PARTITION TYPE DETAIL AT VESTIBULE 143 / BREAK ROOM 146 WALL

NIXA POLICE DEPARTMENT

305 N LEEANN DR
NIXA, MO 65714

112 S. Main St., Nixa, MO 65714 Ph: 417-724-8553

Architecture / Interior Design / Graphics
1401 S. Brentwood Blvd. / Suite 575 / St. Louis, Missouri 63144
314-725-5588 / arch@chiodini.com

Reissue Date

Professional of Record

STATE OF MISSOURI
NATHAN P. RAPP
NUMBER
ARCHITECT

DATE 2025-06-11

Copyright 2025 ©
These prints are the property of the architect and shall be usedonly for the project referenced above

Architect
LMH / NPR

Project #
24-003

Date
2025-06-11

Drawing Title:
PARTITION TYPES AND DETAILS

Sheet:
A720

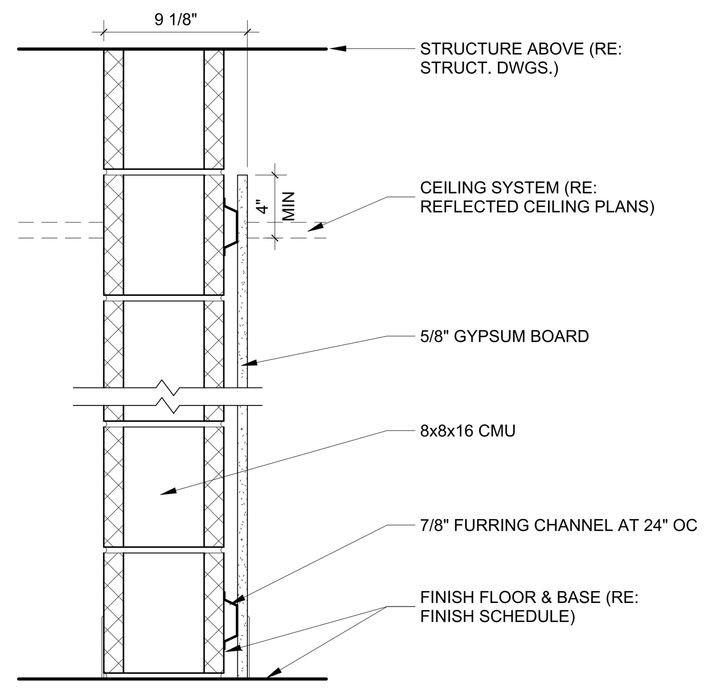

SECTION

NOT FIRE RATED

NOMINAL 8x8x16 CONCRETE MASONRY UNIT LAID IN A FULL BED OF MORTAR NOM. 3/8" THICK. MORTAR SHOULD BE NOT LESS THAN 2-1/4" WIDE AND VERTICAL JOINTS SHOULD BE STAGGERED. APPLY 7/8" FURRING CHANNEL ON ONE SIDE AT 24" OC. APPLY (1) LAYER 5/8" GYPSUM BOARD ON ONE SIDE. SECURE WITH 1" LONG TYPE S STEEL SCREWS @ 8" OC

M80 9 1/8" CMU PARTITION

SCALE: 1 1/2" = 1'-0"

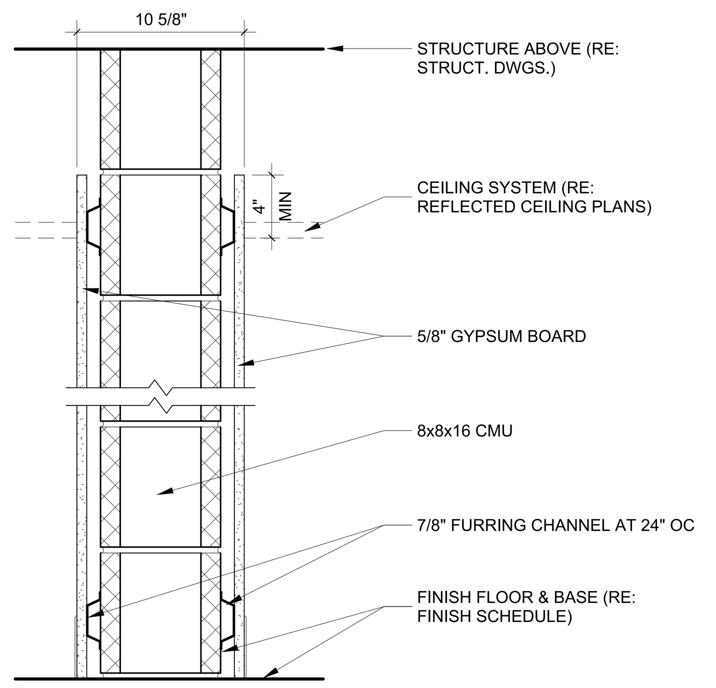

SECTION

NOT FIRE RATED

NOMINAL 8x8x16 CONCRETE MASONRY UNIT LAID IN A FULL BED OF MORTAR NOM. 3/8" THICK. MORTAR SHOULD BE NOT LESS THAN 2-1/4" WIDE AND VERTICAL JOINTS SHOULD BE STAGGERED. APPLY 7/8" FURRING CHANNEL ON EACH SIDE AT 24" OC. APPLY (1) LAYER 5/8" GYPSUM BOARD ON EACH SIDE. SECURE WITH 1" LONG TYPE S STEEL SCREWS @ 8" OC

M81 10 5/8" CMU PARTITION

SCALE: 1 1/2" = 1'-0"

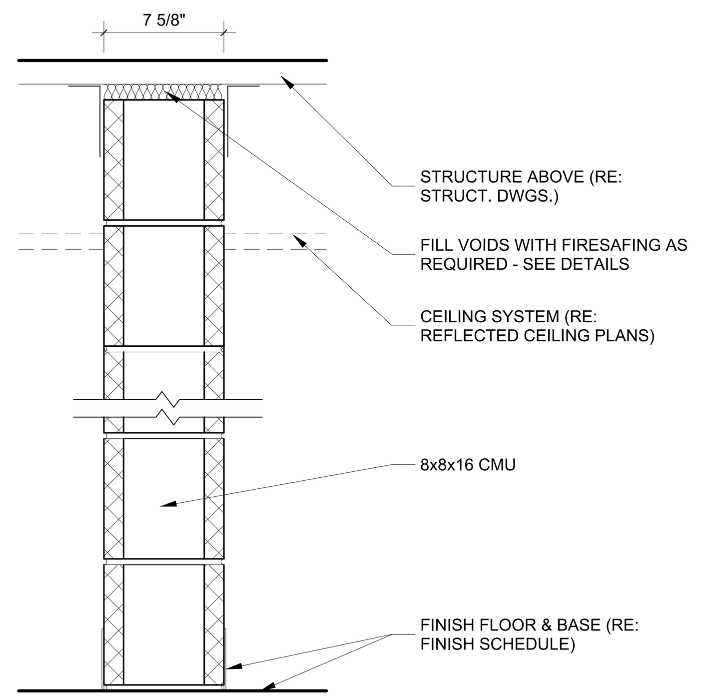

SECTION

1 HOUR FIRE RATED - UL LISTING: U906

NOMINAL 8x8x16 CONCRETE MASONRY UNIT LAID IN A FULL BED OF MORTAR NOM. 3/8" THICK. MORTAR SHOULD BE NOT LESS THAN 2-1/4" WIDE AND NOT LESS THAN 3-1/2 PARTS OF CLEAN SHARP SAND TO 1 PART PORTLAND CEMENT (PROPORTIONED BY VOLUME) AND NOT MORE THAN 50 PERCENT HYDRATED LIME (BY CEMENT VOLUME). VERTICAL JOINTS TO BE STAGGERED.

1M8 7 5/8" CMU PARTITION

SCALE: 1 1/2" = 1'-0"

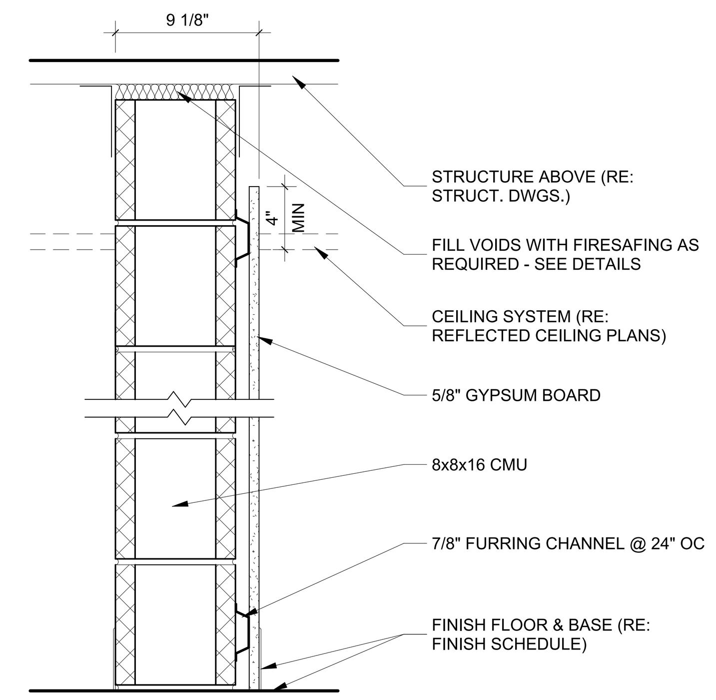

SECTION

1 HOUR FIRE RATED - UL LISTING: U906

NOMINAL 8x8x16 CONCRETE MASONRY UNIT LAID IN A FULL BED OF MORTAR NOM. 3/8" THICK. MORTAR SHOULD BE NOT LESS THAN 2-1/4" WIDE AND NOT LESS THAN 3-1/2 PARTS OF CLEAN SHARP SAND TO 1 PART PORTLAND CEMENT (PROPORTIONED BY VOLUME) AND NOT MORE THAN 50 PERCENT HYDRATED LIME (BY CEMENT VOLUME). VERTICAL JOINTS TO BE STAGGERED. APPLY 7/8" FURRING CHANNEL ON ONE SIDE AT 24" OC. APPLY (1) LAYER 5/8" TYPE 'X' GYPSUM BOARD ON ONE SIDE. SECURE WITH 1" LONG TYPE S STEEL SCREWS @ 8" OC.

1M80 9 1/8" CMU PARTITION

SCALE: 1 1/2" = 1'-0"

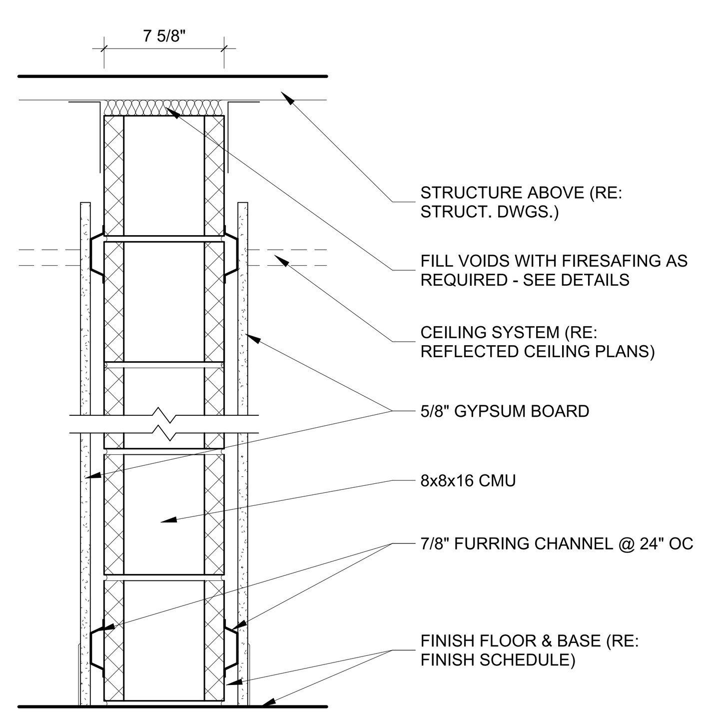

SECTION

1 HOUR FIRE RATED - UL LISTING: U906

NOMINAL 8x8x16 CONCRETE MASONRY UNIT LAID IN A FULL BED OF MORTAR NOM. 3/8" THICK. MORTAR SHOULD BE NOT LESS THAN 2-1/4" WIDE AND NOT LESS THAN 3-1/2 PARTS OF CLEAN SHARP SAND TO 1 PART PORTLAND CEMENT (PROPORTIONED BY VOLUME) AND NOT MORE THAN 50 PERCENT HYDRATED LIME (BY CEMENT VOLUME). VERTICAL JOINTS TO BE STAGGERED. APPLY 7/8" FURRING CHANNEL ON EACH SIDE AT 24" OC. APPLY (1) LAYER 5/8" TYPE 'X' GYPSUM BOARD ON EACH SIDE. SECURE WITH 1" LONG TYPE S STEEL SCREWS @ 8" OC.

1M81 10 5/8" CMU PARTITION

SCALE: 1 1/2" = 1'-0"

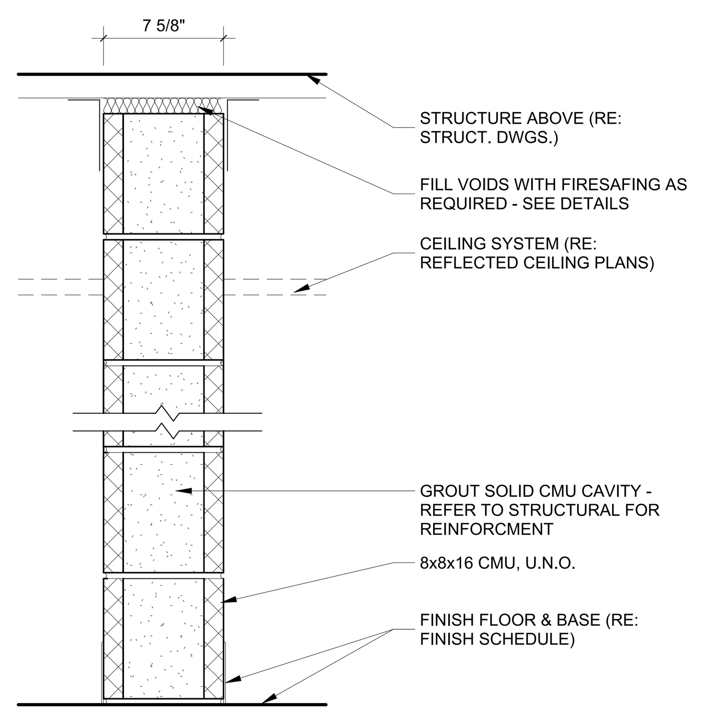

SECTION

2 HOUR FIRE RATED - ICC-500 RATED STORM SHELTER WALL - UL LISTING: U906

NOMINAL 8x8x16 CONCRETE MASONRY UNIT LAID IN A FULL BED OF MORTAR NOM. 3/8" THICK. MORTAR SHOULD BE NOT LESS THAN 2-1/4" WIDE AND NOT LESS THAN 3-1/2 PARTS OF CLEAN SHARP SAND TO 1 PART PORTLAND CEMENT (PROPORTIONED BY VOLUME) AND NOT MORE THAN 50 PERCENT HYDRATED LIME (BY CEMENT VOLUME). VERTICAL JOINTS TO BE STAGGERED.

2M8 7 5/8" CMU PARTITION

SCALE: 1 1/2" = 1'-0"

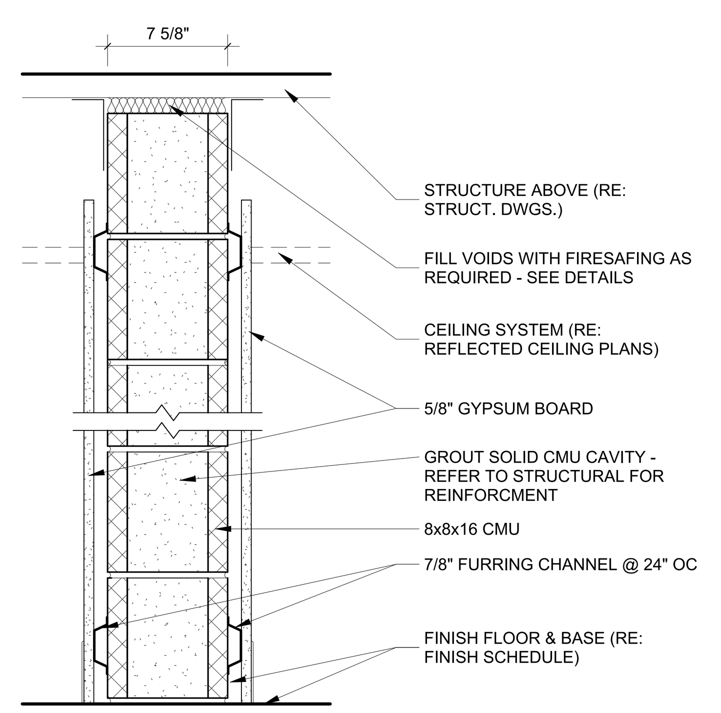

SECTION

2 HOUR FIRE RATED - ICC-500 RATED STORM SHELTER WALL - UL LISTING: U906

NOMINAL 8x8x16 CONCRETE MASONRY UNIT LAID IN A FULL BED OF MORTAR NOM. 3/8" THICK. MORTAR SHOULD BE NOT LESS THAN 2-1/4" WIDE AND NOT LESS THAN 3-1/2 PARTS OF CLEAN SHARP SAND TO 1 PART PORTLAND CEMENT (PROPORTIONED BY VOLUME) AND NOT MORE THAN 50 PERCENT HYDRATED LIME (BY CEMENT VOLUME). VERTICAL JOINTS TO BE STAGGERED. APPLY 7/8" FURRING CHANNEL ON EACH SIDE AT 24" OC. APPLY (1) LAYER 5/8" TYPE 'X' GYPSUM BOARD ON EACH SIDE. SECURE WITH 1" LONG TYPE S STEEL SCREWS @ 8" OC.

2M81 10 5/8" CMU PARTITION

SCALE: 1 1/2" = 1'-0"

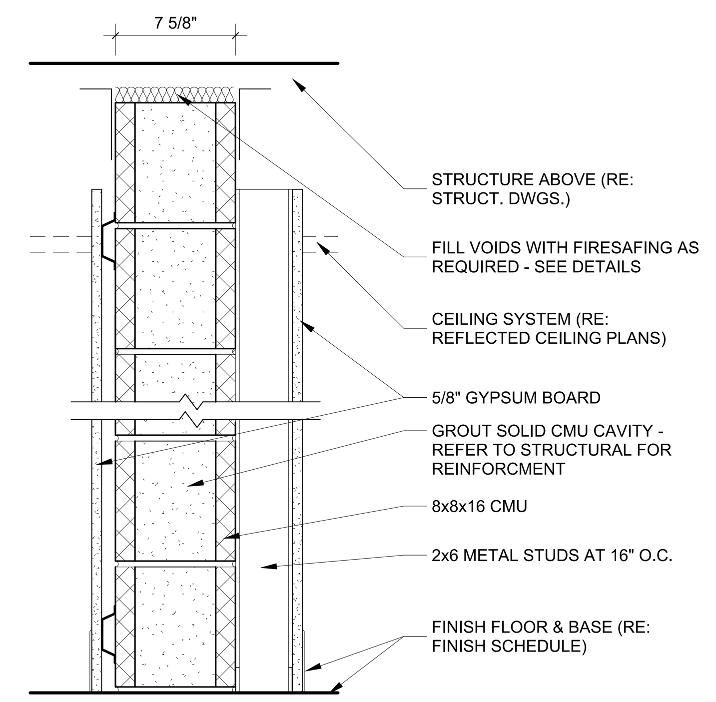

SECTION

2 HOUR FIRE RATED - ICC-500 RATED STORM SHELTER WALL - UL LISTING: U906

NOMINAL 8x8x16 CONCRETE MASONRY UNIT LAID IN A FULL BED OF MORTAR NOM. 3/8" THICK. MORTAR SHOULD BE NOT LESS THAN 2-1/4" WIDE AND NOT LESS THAN 3-1/2 PARTS OF CLEAN SHARP SAND TO 1 PART PORTLAND CEMENT (PROPORTIONED BY VOLUME) AND NOT MORE THAN 50 PERCENT HYDRATED LIME (BY CEMENT VOLUME). VERTICAL JOINTS TO BE STAGGERED. APPLY 7/8" FURRING CHANNEL ON EACH SIDE AT 24" OC. APPLY (1) LAYER 5/8" TYPE 'X' GYPSUM BOARD ON EACH SIDE. SECURE WITH 1" LONG TYPE S STEEL SCREWS @ 8" OC.

2M81d 10 5/8" CMU PARTITION

SCALE: 1 1/2" = 1'-0"

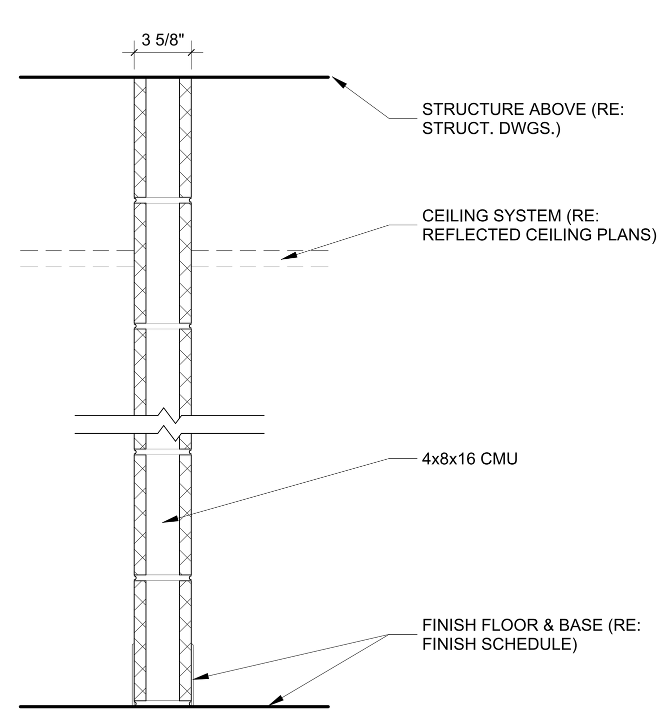

SECTION

NOT FIRE RATED

NOMINAL 4x8x16 CONCRETE MASONRY UNIT LAID IN A FULL BED OF MORTAR NOM. 3/8" THICK. MORTAR SHOULD BE NOT LESS THAN 2-1/4" WIDE AND VERTICAL JOINTS SHOULD BE STAGGERED.

M4 3 5/8" CMU PARTITION

SCALE: 1 1/2" = 1'-0"

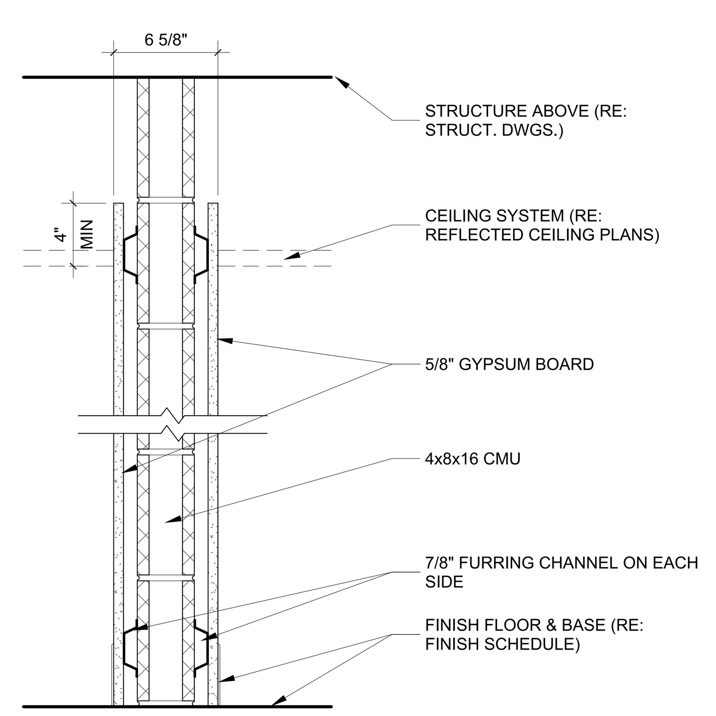

SECTION

NOT FIRE RATED

NOMINAL 4x8x16 CONCRETE MASONRY UNIT LAID IN A FULL BED OF MORTAR NOM. 3/8" THICK. MORTAR SHOULD BE NOT LESS THAN 2-1/4" WIDE AND VERTICAL JOINTS SHOULD BE STAGGERED. APPLY 7/8" FURRING CHANNEL ON EACH SIDE AT 24" OC. APPLY (1) LAYER 5/8" GYPSUM BOARD ON EACH SIDE. SECURE WITH 1" LONG TYPE S STEEL SCREWS @ 8" OC

M41 6 5/8" CMU PARTITION

SCALE: 1 1/2" = 1'-0"

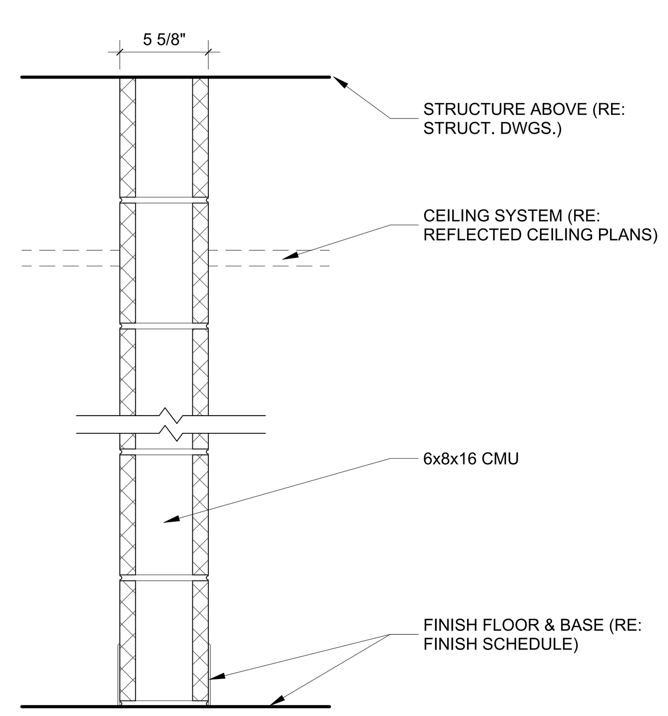

SECTION

NOT FIRE RATED

NOMINAL 5x8x16 CONCRETE MASONRY UNIT LAID IN A FULL BED OF MORTAR NOM. 3/8" THICK. MORTAR SHOULD BE NOT LESS THAN 2-1/4" WIDE AND VERTICAL JOINTS SHOULD BE STAGGERED.

M6 5 5/8" CMU PARTITION

SCALE: 1 1/2" = 1'-0"

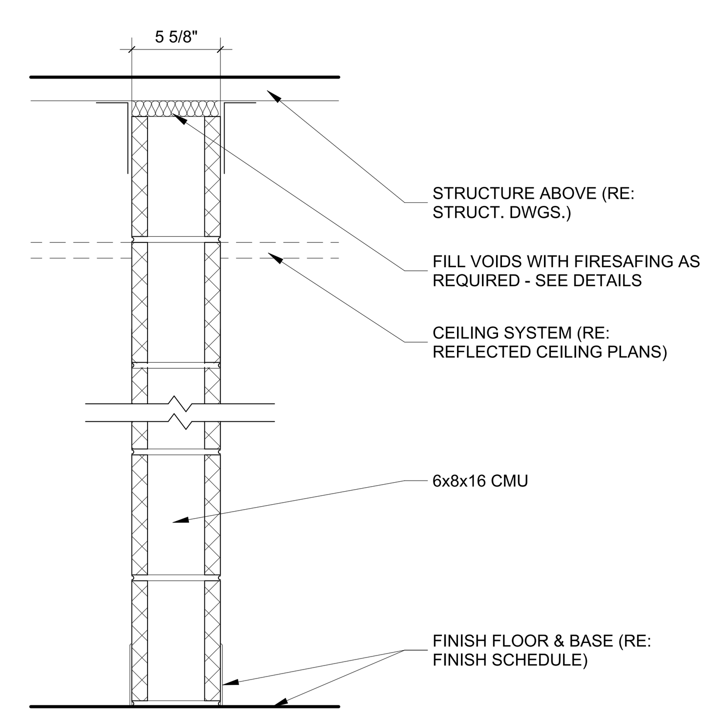

SECTION

1 HOUR FIRE RATED - UL LISTING: U906

NOMINAL 6x8x16 CONCRETE MASONRY UNIT LAID IN A FULL BED OF MORTAR NOM. 3/8" THICK. MORTAR SHOULD BE NOT LESS THAN 2-1/4" WIDE AND NOT LESS THAN 3-1/2 PARTS OF CLEAN SHARP SAND TO 1 PART PORTLAND CEMENT (PROPORTIONED BY VOLUME) AND NOT MORE THAN 50 PERCENT HYDRATED LIME (BY CEMENT VOLUME). VERTICAL JOINTS TO BE STAGGERED.

1M6 5 5/8" CMU PARTITION

SCALE: 1 1/2" = 1'-0"

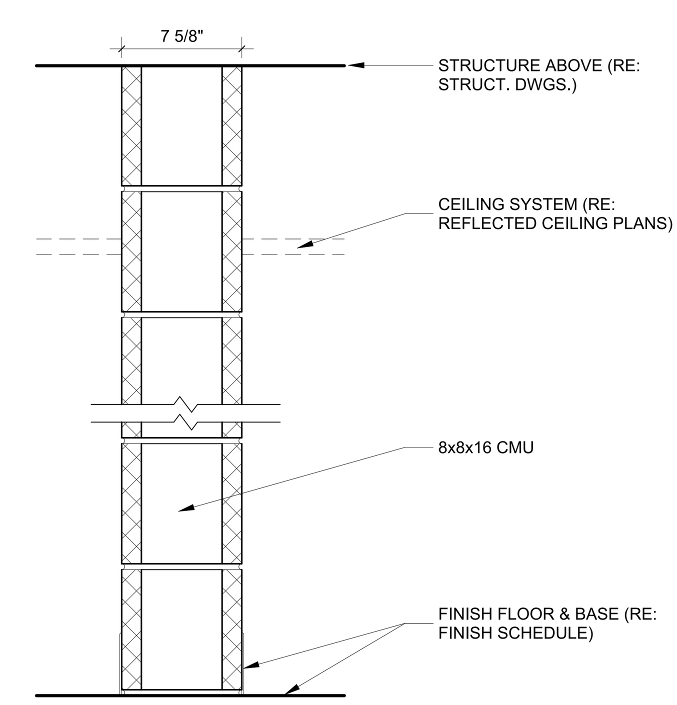

SECTION

NOT FIRE RATED

NOMINAL 8x8x16 CONCRETE MASONRY UNIT LAID IN A FULL BED OF MORTAR NOM. 3/8" THICK. MORTAR SHOULD BE NOT LESS THAN 2-1/4" WIDE AND VERTICAL JOINTS SHOULD BE STAGGERED.

M8 7 5/8" CMU PARTITION

SCALE: 1 1/2" = 1'-0"

GENERAL PARTITION TYPE NOTES:

A. REFER TO ARCHITECTURAL FLOOR PLANS FOR PARTITION TYPE DESIGNATIONS.
B. PROVIDE TYPE-X GYPSUM BOARD FOR 1/2" AND 5/8" GYPSUM BOARD, REGARDLESS OF RATING REQUIREMENT.
C. PROVIDE IMPACT RESISTANT GYPSUM BOARD AT STAIR, RAMP AND CORRIDOR WALLS, UNLESS NOTED OTHERWISE.

CODE/LIFE SAFETY

D. CONTRACTOR TO VERIFY **EXISTING WALL** FIRE AND SMOKE RATINGS, AS INDICATED IN DOCUMENTS, COMPLY WITH CODE FOR LABELED RATING. ARCHITECT TO BE NOTIFIED IF EXISTING RATED WALLS HAVE NOT BEEN CONSTRUCTED TO COMPLY WITH CODE REQUIREMENTS AND SHALL MODIFY OR REBUILD DEFICIENT WALLS TO MEET CODE REQUIREMENTS.
E. CONTRACTOR TO VERIFY **EXISTING WALL** FIRE AND SMOKE RATED OPENINGS, AS INDICATED IN DOCUMENTS, COMPLY WITH CODE FOR LABELED RATING. ARCHITECT TO BE NOTIFIED IF EXISTING RATED WALL OPENINGS ARE UNPROTECTED, OR IMPROPERLY PROTECTED, TO COMPLY WITH CODE REQUIREMENTS AND SHALL INSTALL, MODIFY OR REPLACE OPENINGS PROTECTION TO MEET CODE REQUIREMENTS
F. REFER TO CODE DATA/LIFE SAFETY CONTRACT DOCUMENTS FOR ADDITIONAL FIRE RATINGS, SMOKE PARTITION LOCATIONS, INFORMATION AND REQUIREMENTS.
G. CONTRACTOR SHALL BE RESPONSIBLE FOR PROVIDING RATED ASSEMBLIES AS INDICATED IN CONTRACT DOCUMENTS AND PER ALL LOCAL AND JURISDICTIONAL CODES IN FORCE.
H. FIRE WALLS, PARTITIONS AND BARRIERS SHALL NOT BE PENETRATED EXCEPT AS ALLOWED AND PROTECTED BY CODE REQUIREMENTS. THE APPROPRIATE USE OF FIRE STOPPING, DAMPERS, FIRE RESISTIVE MATERIALS, METHODS OF CONSTRUCTION, ETC MUST BE ENFORCED.
I. PROVIDE STRUCTURAL STEEL PROTECTION AS REQUIRED BY CODE (TYPICAL).
J. PROVIDE FURRING AT STRUCTURAL ELEMENTS AS REQUIRED TO SEAL GYPSUM BOARD TIGHT TO STRUCTURAL DECK OR EXTERIOR WALL TO MAINTAIN REQUIRED SMOKE BARRIER AND FIRE RATED PARTITION RATINGS.

GYPSUM WET WALLS AND BACKER BOARD

K. PLUMBING WET WALLS AND TYPICAL TILE FACED WALL SURFACES TO USE TYPE-X WATER-RESISTANT GYPSUM BOARD, INCLUDING BUT NOT LIMITED TO, DRINKING FOUNTAIN WALLS, REST ROOM PLUMBING WALLS OR FOOD SERVING COUNTERS.
L. TILE FACED WALLS SURFACES SUBJECT EXCESSIVE WATER OR "BACK OF HOUSE HOSE DOWN" AREAS, INCLUDING BUT NOT LIMITED TO, KITCHENS, DISH ROOMS, CUSTODIAL CLOSET, SHALL USE CEMENTITIOUS BACKER BOARD IN LIEU OF WATER-RESISTANT GYPSUM BOARD. INSTALL 6 MIL POLYETHYLENE MEMBRANE VAPOR BARRIER BEHIND CEMENT BACKER BOARD, SEAL ALL SEAMS WITH APPROVED TAPE.

INTERIOR METAL STUD LIMITING HEIGHT SCHEDULE

STUD SIZE	STUD SPACING	ALLOWABLE Δ	LIMITING HEIGHT
1 5/8"	16" O.C.	L/240	8'-10" MAX HGT.
1 5/8"	24" O.C.	L/240	7'-9" MAX HGT.
2 1/2"	16" O.C.	L/240	12'-3" MAX HGT.
2 1/2"	24" O.C.	L/240	10'-8" MAX HGT.
3 5/8"	16" O.C.	L/240	16'-3" MAX HGT.
3 5/8"	24" O.C.	L/240	14'-3" MAX HGT.
4"	16" O.C.	L/240	17'-7" MAX HGT.
4"	24" O.C.	L/240	15'-4" MAX HGT.
6"	16"O.C.	L/240	24'-1" MAX HGT.
6"	24" O.C.	L/240	20'-1" MAX HGT.

NOTES:
1. THE ABOVE LIMITING HEIGHTS ARE BASED ON THE CLARKDEITRICH PROSTUD (PROSTUD 33MIL) (5.0 PSF), NON-COMPOSITE WALL (FULLY BRACED), CONTRACTOR TO VERIFY LIMITING HEIGHTS BASED ON MANUFACTURER OF STUD PROVIDED FOR PROJECT.

PARTITION TAG DESIGNATIONS

FIRE RATING (IF ANY)
STRUCTURE TYPE
STRUCTURE SIZE
SHEATHING/CONSTRUCTION
MODIFIER (IF ANY)

XS31a

FIRE RATING:
1 = 1 HOUR
2 = 2 HOUR
3 = 3 HOUR
4 = 4 HOUR

STRUCTURE TYPE:
C = CONCRETE
H = SHAFT WALL
M = CMU
S = STEEL STUDS
W = WOOD STUDS

STRUCTURE SIZE:

CMU:
4 = 3-5/8"
8 = 7-5/8"
12 = 11-5/8"

SHAFT STUDS:
2 = 2-1/2"
4 = 4"

STEEL STUDS:
0 = 7/8" OR 1-1/2"
1 = 1-5/8"
2 = 2-1/2"
3 = 3-5/8"
4 = 4"
6 = 6"
8 = 8"

WOOD STUDS:
4 = 2x4
6 = 2x6
8 = 2x8

CONCRETE: NOMINAL WIDTH OF WALL

SHEATHING CONSTRUCTION:
NONE = NO SHEATHING
0 = ONE LAYER OF SHEATHING, ONE SIDE
1 = ONE LAYER OF SHEATHING EACH SIDE
2 = TWO LAYERS OF SHEATHING EACH SIDE

MODIFIERS:
a = PROVIDE SAFB INSULATION, FRICTION FIT, FULL HEIGHT OF WALL AND EXTEND SAFB 2'-0" ON EACH SIDE OF WALL ABOVE CEILING
b = PROVIDE DIAGONAL BRACING TO STRUCTURE ABOVE
c = PROVIDE BULLET RESISTANT PANEL TO PUBLIC SIDE OF WALL UNDERNEATH GYP BD LAYER. PANELS SHOULD BE LEVEL 3 BALLISTIC PROTECTION RATING OR BETTER.
d = PROVIDE 3 5/8" METAL STUDS AT 16" OC IN LIEU OF FURRING CHANNEL
e = UNIQUE PARTITION TYPE DETAIL AT VESTIBULE 143 / BREAK ROOM 146 W

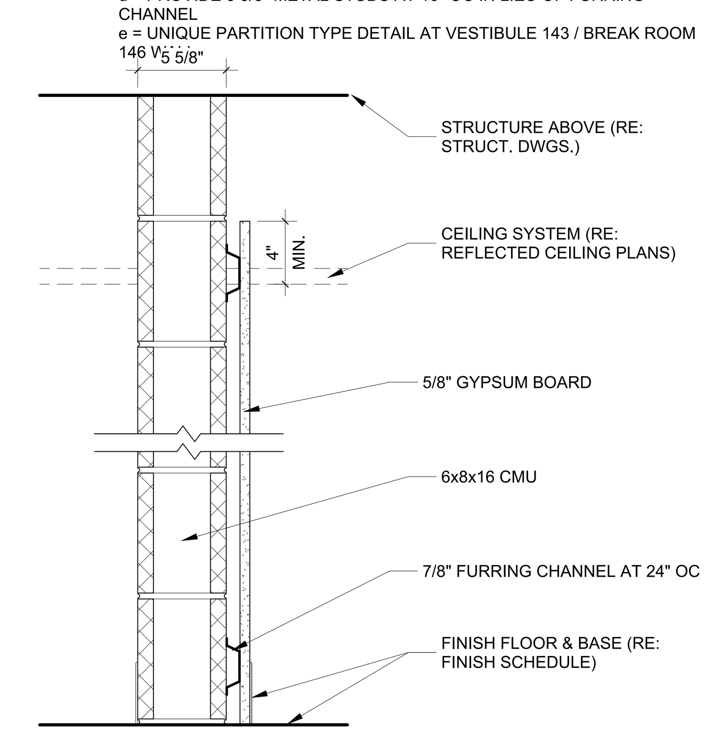

SECTION

NOT FIRE RATED

NOMINAL 5x8x16 CONCRETE MASONRY UNIT LAID IN A FULL BED OF MORTAR NOM. 3/8" THICK. MORTAR SHOULD BE NOT LESS THAN 2-1/4" WIDE AND VERTICAL JOINTS SHOULD BE STAGGERED.

M6 5 5/8" CMU PARTITION

SCALE: 1 1/2" = 1'-0"

NIXA POLICE DEPARTMENT

305 N LEEANN DR
NIXA, MO 65714

INSIGHT DESIGN iDeA ARCHITECTS
112 S. Main St., Nixa, MO 65714 Ph: 417-724-8553

CJD Engineering | Energy | Innovation

olsson

METTEMEYER ENGINEERING LLC

Chiodini ARCHITECTS
Architecture / Interior Design / Graphics
1401 S. Brentwood Blvd. / Suite 575 / St. Louis, Missouri 63144
314-725-5588 / arch@chiodini.com

Reissue Date

Professional of Record

STATE OF MISSOURI NATHAN P. RAPP NUMBER ARCHITECT

DATE 2025-06-11

Copyright 2025 ©
These prints are the property of the architect and shall be usedonly for the project referenced above

Architect
LMH / NPR

Project #
24-003

Date
2025-06-11

Drawing Title:
PARTITION TYPES AND DETAILS

Sheet:
A721

PRINTED: 6/11/2025 11:44:58 AM

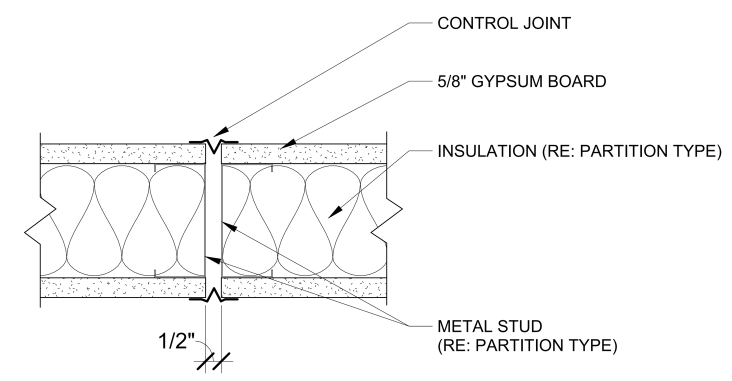

WALLS GREATER THAN 30 FEET IN LENGTH REQUIRE CONTROL JOINT. COORDINATE CONTROL JOINT LOCATIONS WITH ARCHITECT

5 GYPSUM BOARD CONTROL JOINT
3" = 1'-0"

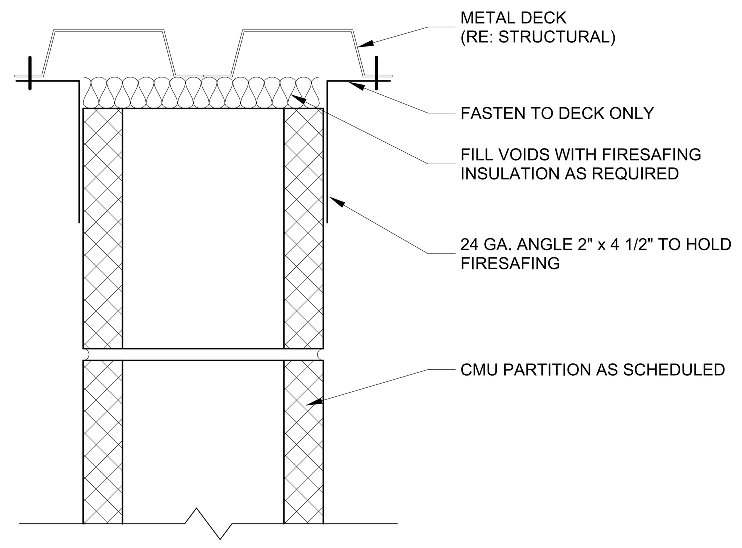

6 CMU PARALLEL TO FLUTES @ FIRE RATED PARTITION
3" = 1'-0"

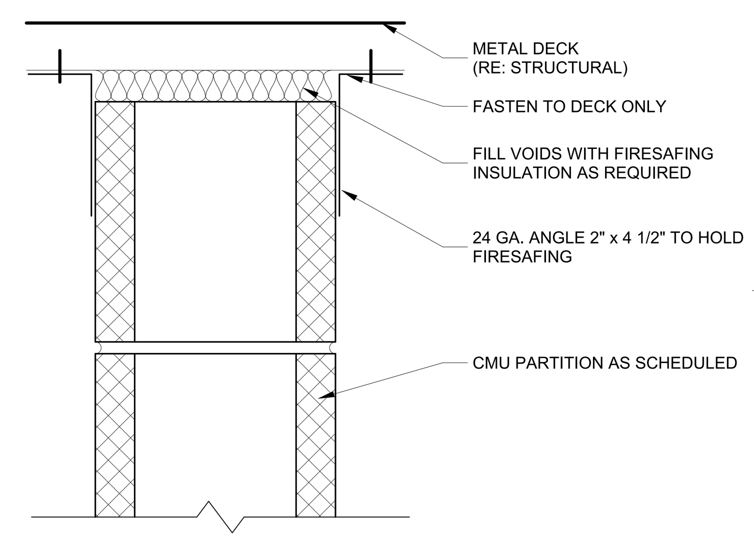

7 CMU PERPENDICULAR TO FLUTES @ FIRE RATED PARTITION
3" = 1'-0"

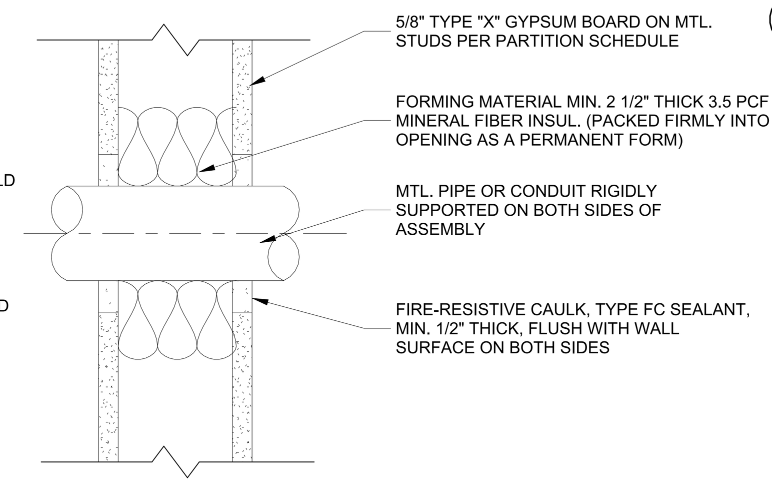

8 PENETRATION - 1 HR
3" = 1'-0"

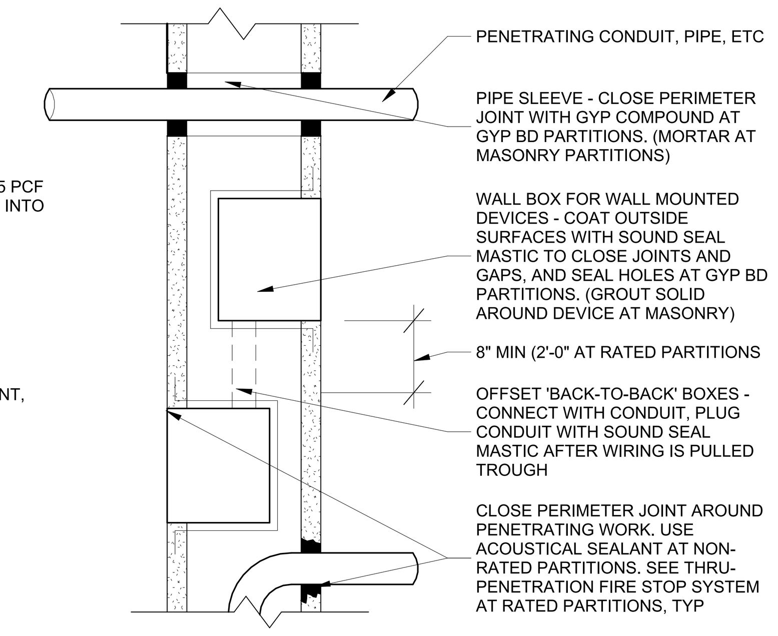

9 PENETRATION TYP.
3" = 1'-0"

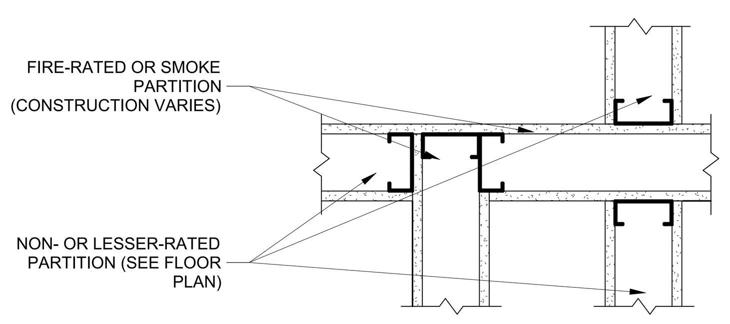

NOTE:
- WHEN TWO FIRE-RATED PARTITIONS INTERSECT, THE HIGHER RATED PARTITION IS TO BE CONTINUOUS IN ITS CONSTRUCTION
- WHEN A SMOKE PARTITION AND A FIRE-RATED PARTITION INTERSECT, THE FIRE-RATED PARTITION IS TO BE CONTINUOUS IN ITS CONSTRUCTION

10 RATED PARTITION INTERSECTION
1 1/2" = 1'-0"

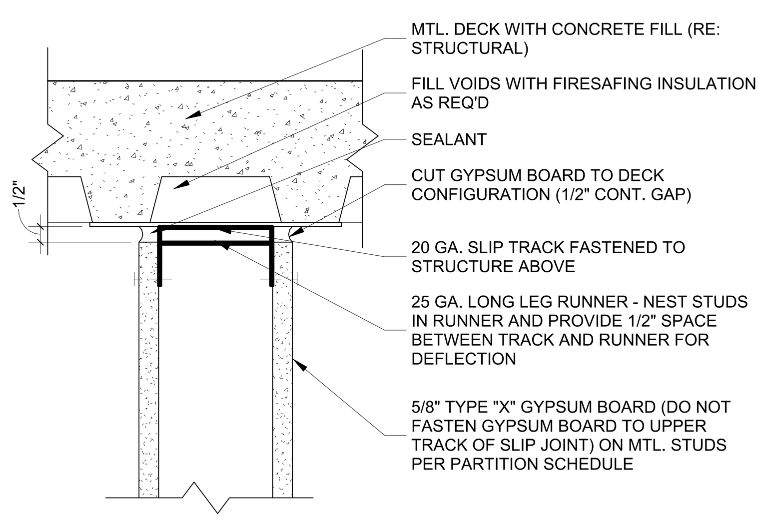

12 SLIP TRACK PARALLEL TO FLUTES @ 1HR FIRE PARTITION
3" = 1'-0"

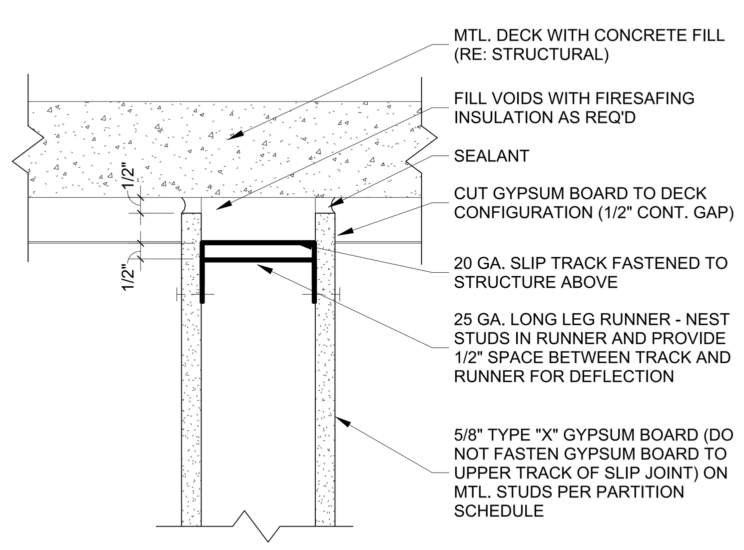

13 SLIP TRACK PERPENDICULAR TO FLUTES @ 1 HR FIRE PARTITION
3" = 1'-0"

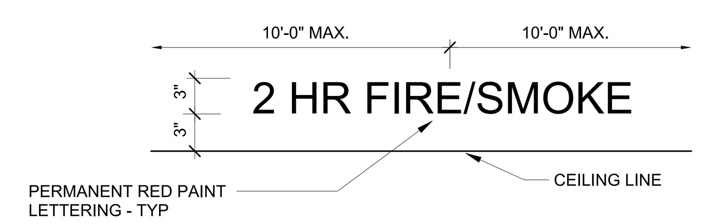

NOTES:
1. PROVIDE PAINTED STENCIL LETTERING, 3" HIGH, ABOVE THE CEILING TO INDICATE PARTITION RATINGS.
2. LETTERED STENCILS SHALL BE APPLIED TO EACH SIDE OF RATED PARTITIONS AT 10'-0" INTERVALS; BUT NO LESS THAN ONCE PER PARTITION LENGTH.
3. USE THE FOLLOWING LANGUAGE FOR STENCILS:
   A. "2HR FIRE / SMOKE"
   B. "2HR FIRE "
   C. "1HR FIRE / SMOKE"
   D. "1HR FIRE "
   E. "LIMIT TRANSFER OF SMOKE"

11 RATING LETTERED STENCILS
1 1/2" = 1'-0"

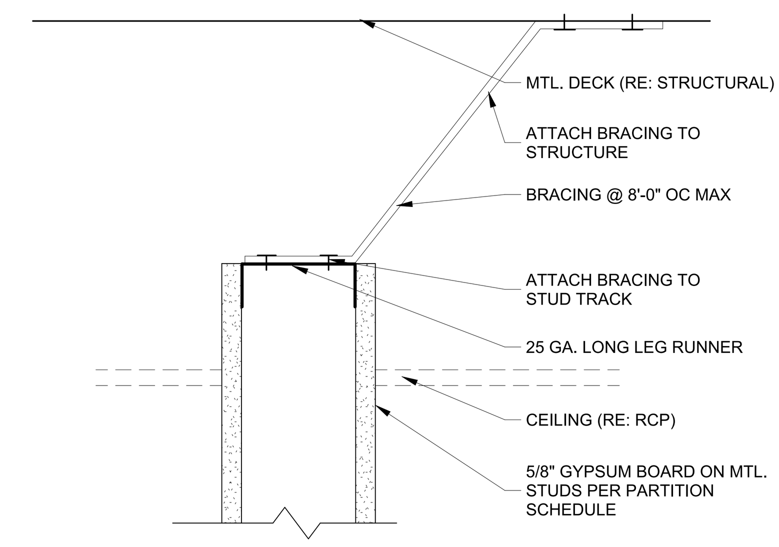

14 WALL CONNECTION ABOVE CEILING
3" = 1'-0"

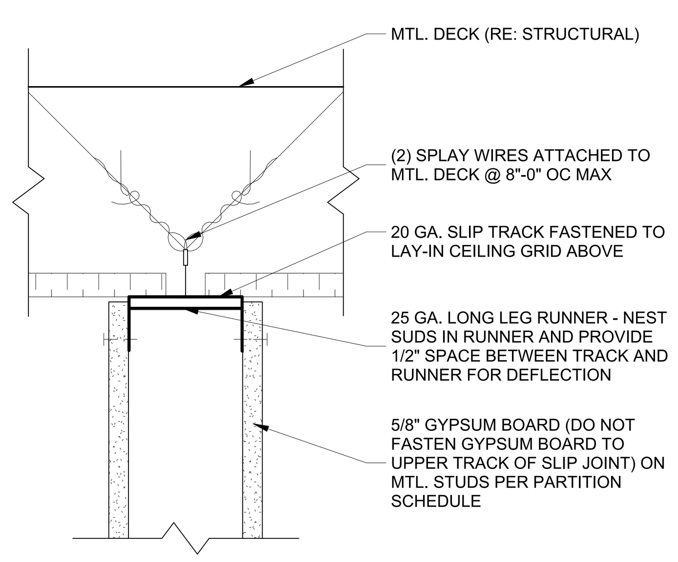

15 WALL CONNECTION TO LAY-IN CEILING
3" = 1'-0"

GENERAL PARTITION TYPE NOTES:

A. REFER TO ARCHITECTURAL FLOOR PLANS FOR PARTITION TYPE DESIGNATIONS.
B. PROVIDE TYPE-X GYPSUM BOARD FOR 1/2" AND 5/8" GYPSUM BOARD, REGARDLESS OF RATING REQUIREMENT.
C. PROVIDE IMPACT RESISTANT GYPSUM BOARD AT STAIR, RAMP AND CORRIDOR WALLS, UNLESS NOTED OTHERWISE.

CODE/LIFE SAFETY

D. CONTRACTOR TO VERIFY **EXISTING WALL** FIRE AND SMOKE RATINGS, AS INDICATED IN DOCUMENTS, COMPLY WITH CODE FOR LABELED RATING. ARCHITECT TO BE NOTIFIED IF EXISTING RATED WALLS HAVE NOT BEEN CONSTRUCTED TO COMPLY WITH CODE REQUIREMENTS AND SHALL MODIFY OR REBUILD DEFICIENT WALLS TO MEET CODE REQUIREMENTS.
E. CONTRACTOR TO VERIFY **EXISTING WALL** FIRE AND SMOKE RATED OPENINGS, AS INDICATED IN DOCUMENTS, COMPLY WITH CODE FOR LABELED RATING. ARCHITECT TO BE NOTIFIED IF EXISTING RATED WALL OPENINGS ARE UNPROTECTED, OR IMPROPERLY PROTECTED, TO COMPLY WITH CODE REQUIREMENTS AND SHALL INSTALL, MODIFY OR REPLACE OPENINGS PROTECTION TO MEET CODE REQUIREMENTS
F. REFER TO CODE DATA/LIFE SAFETY CONTRACT DOCUMENTS FOR ADDITIONAL FIRE RATINGS, SMOKE PARTITION LOCATIONS, INFORMATION AND REQUIREMENTS.
G. CONTRACTOR SHALL BE RESPONSIBLE FOR PROVIDING RATED ASSEMBLIES AS INDICATED IN CONTRACT DOCUMENTS AND PER ALL LOCAL AND JURISDICTIONAL CODES IN FORCE.
H. FIRE WALLS, PARTITIONS AND BARRIERS SHALL NOT BE PENETRATED EXCEPT AS ALLOWED AND PROTECTED BY CODE REQUIREMENTS. THE APPROPRIATE USE OF FIRE STOPPING, DAMPERS, FIRE RESISTIVE MATERIALS, METHODS OF CONSTRUCTION, ETC MUST BE ENFORCED.
I. PROVIDE STRUCTURAL STEEL PROTECTION AS REQUIRED BY CODE (TYPICAL).
J. PROVIDE FURRING AT STRUCTURAL ELEMENTS AS REQUIRED TO SEAL GYPSUM BOARD TIGHT TO STRUCTURAL DECK OR EXTERIOR WALL TO MAINTAIN REQUIRED SMOKE BARRIER AND FIRE RATED PARTITION RATINGS.

GYPSUM WET WALLS AND BACKER BOARD

K. PLUMBING WET WALLS AND TYPICAL TILE FACED WALL SURFACES TO USE TYPE-X WATER-RESISTANT GYPSUM BOARD, INCLUDING BUT NOT LIMITED TO, DRINKING FOUNTAIN WALLS, REST ROOM PLUMBING WALLS OR FOOD SERVING COUNTERS.
L. TILE FACED WALLS SURFACES SUBJECT EXCESSIVE WATER OR "BACK OF HOUSE HOSE DOWN" AREAS, INCLUDING BUT NOT LIMITED TO, KITCHENS, DISH ROOMS, CUSTODIAL CLOSET, SHALL USE CEMENTITIOUS BACKER BOARD IN LIEU OF WATER-RESISTANT GYPSUM BOARD. INSTALL 6 MIL POLYETHYLENE MEMBRANE VAPOR BARRIER BEHIND CEMENT BACKER BOARD, SEAL ALL SEAMS WITH APPROVED TAPE.

INTERIOR METAL STUD LIMITING HEIGHT SCHEDULE

STUD SIZE	STUD SPACING	ALLOWABLE Δ	LIMITING HEIGHT
1 5/8"	16" O.C.	L/240	8'-10" MAX HGT.
1 5/8"	24" O.C.	L/240	7'-9" MAX HGT.
2 1/2"	16" O.C.	L/240	12'-3" MAX HGT.
2 1/2"	24" O.C.	L/240	10'-8" MAX HGT.
3 5/8"	16" O.C.	L/240	16'-3" MAX HGT.
3 5/8"	24" O.C.	L/240	14'-3" MAX HGT.
4"	16" O.C.	L/240	17'-7" MAX HGT.
4"	24" O.C.	L/240	15'-4" MAX HGT.
6"	16"O.C.	L/240	24'-1" MAX HGT.
6"	24" O.C.	L/240	20'-1" MAX HGT.

NOTES:
1. THE ABOVE LIMITING HEIGHTS ARE BASED ON THE CLARKDEITRICH PROSTUD (PROSTUD 33MIL) (5.0 PSF), NON-COMPOSITE WALL (FULLY BRACED), CONTRACTOR TO VERIFY LIMITING HEIGHTS BASED ON MANUFACTURER OF STUD PROVIDED FOR PROJECT.

PARTITION TAG DESIGNATIONS

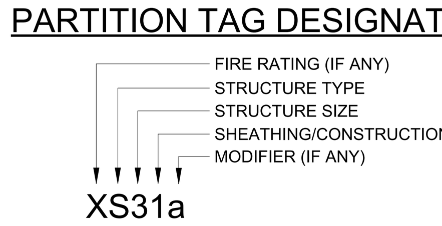

FIRE RATING:
1 = 1 HOUR
2 = 2 HOUR
3 = 3 HOUR
4 = 4 HOUR

STRUCTURE SIZE:

CMU:
4 = 3-5/8"
8 = 7-5/8"
12 = 11-5/8"

SHAFT STUDS:
2 = 2-1/2"
4 = 4"

STEEL STUDS:
0 = 7/8" OR 1-1/2"
1 = 1-5/8"
2 = 2-1/2"
3 = 3-5/8"
4 = 4"
6 = 6"
8 = 8"

WOOD STUDS:
4 = 2x4
6 = 2x6
8 = 2x8

CONCRETE: NOMINAL WIDTH OF WALL

STRUCTURE TYPE:
C = CONCRETE
H = SHAFT WALL
M = CMU
S = STEEL STUDS
W = WOOD STUDS

SHEATHING CONSTRUCTION:
NONE = NO SHEATHING
0 = ONE LAYER OF SHEATHING, ONE SIDE
1 = ONE LAYER OF SHEATHING EACH SIDE
2 = TWO LAYERS OF SHEATHING EACH SIDE

MODIFIERS:
a = PROVIDE SAFB INSULATION, FRICTION FIT, FULL HEIGHT OF WALL AND EXTEND SAFB 2'-0" ON EACH SIDE OF WALL ABOVE CEILING
b = PROVIDE DIAGONAL BRACING TO STRUCTURE ABOVE
c = PROVIDE BULLET RESISTANT PANEL TO PUBLIC SIDE OF WALL UNDERNEATH GYP BD LAYER. PANELS SHOULD BE LEVEL 3 BALLISTIC PROTECTION RATING OR BETTER.
d = PROVIDE 3 5/8" METAL STUDS AT 16" OC IN LIEU OF FURRING CHANNEL
e = UNIQUE PARTITION TYPE DETAIL AT VESTIBULE 143 / BREAK ROOM 146 WALL

NIXA POLICE DEPARTMENT
305 N LEEANN DR
NIXA, MO 65714

INSIGHT DESIGN iDeA ARCHITECTS
112 S. Main St., Nixa, MO 65714 Ph: 417-724-8553

CJD Engineering | Energy | Innovation

olsson

METTEMEYER ENGINEERING LLC

Chiodini ARCHITECTS
Architecture / Interior Design / Graphics
1401 S. Brentwood Blvd. / Suite 575 / St. Louis, Missouri 63144
314-725-5588 / arch@chiodini.com

Reissue Date

Professional of Record

STATE OF MISSOURI
NATHAN P. RAPP
NUMBER
ARCHITECT

DATE 2025-06-11

Copyright 2025 ©
These prints are the property of the architect and shall be usedonly for the project referenced above

Architect
LMH / NPR

Project #
24-003

Date
2025-06-11

Drawing Title:
PARTITION TYPES AND DETAILS

Sheet:
A722

PRINTED: 6/11/2025 11:44:59 AM

ABBREVIATIONS - INTERIORS

ACT	ACOUSTICAL CEILING TILE
AFF	ABOVE FINISH FLOOR
ALT	ALTERNATE
ALUM	ALUMINUM
AP	ACOUSTICAL PANEL
APF	ACOUSTICAL PANEL FABRIC
BO_	BOTTOM OF ___
CF/CI	CONTRACTOR FURNISHED / CONTRACTOR INSTALLED
CF/OI	CONTRACTOR FURNISHED / OWNER INSTALLED
CG	CORNER GUARD
CIP	CAST-IN-PLACE
CJ	CONTROL JOINT
CL	CENTER LINE
CMU	CONCRETE MASONRY UNIT
CONC	CONCRETE
CPT	CARPET
CT	CERAMIC TILE
CTB	CERAMIC TILE BASE
CR	CARD READER
DIA	DIAMETER
DN	DOWN
EJ	EXPANSION JOINT
EL	ELEVATION
ELEC	ELECTRIC / ELECTRICAL
ELEV	ELEVATOR
EQ	EQUAL
EXIST	EXISTING
EXPD	EXPOSED
EPXY	EPOXY
FD	FLOOR DRAIN
FE	FIRE EXTINGUISHER
FEB	FIRE EXTINGUISHER IN SURFACE MOUNT BRACKET
FEC	FIRE EXTINGUISHER CABINET
FEC-SR	FIRE EXTINGUISHER CABINET – SEMI-RECESSED
FEC-SM	FIRE EXTINGUISHER CABINET – SURFACE MOUNT
FRT	FIRE RETARDANT TREATED
FRP	FIBERGLASS REINFORCED PANEL
FS	FLOOR SINK
GA	GAUGE
GALV	GALVANIZED
GFRC	GLASS-FIBER REINFORCED CONCRETE
GFR	GLASS-FIBER REINFORCED GYPSUM
GL	GLASS
GYP	GYPSUM
HM	HOLLOW METAL
HORIZ	HORIZONTAL
IMP	INSULATED METAL PANEL
INSUL	INSULATION
JNT	JOINT
LVT	LUXURY VINYL TILE
MAX	MAXIMUM
MECH	MECHANICAL
MFR	MANUFACTURER
MIN	MINIMUM
MISC	MISCELLANEOUS
MRB	MILLWORK RUBBER BASE
MTL	METAL
NA	NOT APPLICABLE
NIC	NOT IN CONTRACT
NTS	NOT TO SCALE
OC	ON CENTER
OF/CI	OWNER FURNISHED / CONTRACTOR INSTALLED
OF/OI	OWNER FURNISHED / OWNER INSTALLED
OPP	OPPOSITE
OTA	OPEN TO ABOVE
OTB	OPEN TO BELOW
PLAM	PLASTIC LAMINATE
PLYWD	PLYWOOD
PNT	PAINT
PRF	PREFINISHED
PT	PORCELAIN TILE
PTB	PORCELAIN TILE BASE
R	RISER
RB	RUBBER BASE
RCP	REFLECTED CEILING PLAN
RE	REFER TO
REF	REFRIGERATOR
REV	REVISION
RM	ROOM
RO	ROUGH OPENING
RSF	RUBBER SPORT FLOOR
SC-PS	SEALED CONCRETE/PENETRATING SEALER
SF	SQUARE FEET
SI	SQUARE INCHES
SIM	SIMILAR
SOG	SLAB ON GRADE
SPEC	SPECIFICATION
SPS	SOLID POLYMER SURFACE
SS	STAINLESS STEEL
STN	STONE
STL	STEEL
STOR	STORAGE
STRUCT	STRUCTURAL
SY	SQUARE YARDS
TO_	TOP OF ___
TP	TOILET PARTITION
TS	TRANSITION STRIP
TYP	TYPICAL
UL	UNDERWRITERS LABORATORY
UNO	UNLESS NOTED OTHERWISE
VIF	VERIFY IN FIELD
WOC	WALK OFF CARPET
WF	WINDOW FILM
WP	WALL PROTECTION
WS	WINDOW SHADE
WD	WOOD

GENERAL FINISH NOTES:

A. CONTRACTOR SHALL BE RESPONSIBLE FOR EXAMINING AND CONFIRMING ALL SUBSTRATE CONDITIONS WHERE NEW MATERIALS ARE APPLIED. SUBSTRATE SHALL BE SMOOTH, FREE OF DEFECTS AND SHALL CONFORM TO THE REQUIREMENTS OF THE FINISHED MATERIAL MANUFACTURERS WRITTEN RECOMMENDATIONS AND REQUIREMENTS.
B. UPON COMPLETION OF PORCELAIN/CERAMIC TILE INSTALLATION, CONTRACTOR TO CLEAN ALL TILE SURFACES PER MANUFACTURERS WRITTEN RECOMMENDATIONS TO BE FREE OF FOREIGN MATTER AND CONTAMINANTS. APPLY (2) COATS OF GROUT SEALER PER MANUFACTURERS RECOMMENDATION. PROTECT TILED FLOORS FROM TRAFFIC FOR A MINIMUM OF 7 DAYS FOLLOWING GROUTING SEALER INSTALLATION.
C. SCHEDULED FLOORING TO RUN CONTINUOUS FROM PARTITION TO PARTITION AND EXTENDING UNDER CASEWORK, UNLESS NOTED OTHERWISE.
D. FLOOR TRANSITIONS AT A DOOR SHALL OCCUR AT CENTERLINE OF THE DOOR, UNLESS NOTED OTHERWISE. FLOOR TRANSITIONS AT A WALL OPENING, CASED OR OTHERWISE, SHALL ALIGN WITH ONE SIDE OF THE WALL, UNLESS NOTED OTHERWISE. SEE PLAN FOR ALIGNMENT SIDE, COORDINATE WITH ARCHITECT IF NOT SHOWN. REFER TO A810 & A811 FOR TRANSITION LOCATIONS. TRANSITION DETAILS ON A801.

TYPICAL FINISHES

A. ALL WALLS SHALL BE PAINTED **(PNT-1)** UNLESS NOTED OTHERWISE.
B. ALL DOOR FRAMES TO BE PAINTED (**PNT-6**), UNLESS NOTED OTHERWISE.
C. ALL GYPSUM BOARD CEILINGS TO BE PAINTED **(PNT-7)**, UNLESS NOTED OTHERWISE.
D. ALL ACOUSTICAL CEILINGS TO BE **(ACT-1)**, UNLESS NOTED OTHERWISE.
E. REVIEW WINDOWS TO RECEIVE SHADES. - (**WS-1) & (WS-2). REFER TO RCP PLANS**
F. ALL RECEPTACLES, SWITCHES, COVER PLATES, ETC. ARE TO BE **(WHITE)**, UNLESS ON WALLS WITH PNT-2 OR PNT-4 - THOSE CONDITIONS TO BE (**BLACK).** COORDINATE WITH ELECTRICAL DOCUMENTS.
G. ALL WALLS IN ALL RESTROOMS SHALL RECEIVE COVED BASE, WALL TILE, AND A SCHLUTER (OR EQUAL) TRIM UP TO 4'-0" AFF. SEE SCHEDULE FOR WALL TILE IN EACH RESTROOM

FINISH REMARKS

A. REFER TO A600 FOR CASEWORK ELEVATIONS AND MATERIALS.
B. REFER TO FINISH PLANS FOR FULL EXTENT OF WALL MATERIAL/PAINT LOCATIONS.
C. REFER TO REFLECTED CEILING PLANS FOR CEILING MATERIAL LOCATIONS.
D. FRP AT MOP SINK - 4'-0" AFF AND EXTEND 24" PAST MOP SINK.
E. REFER TO ENLARGED PLANS & ELEVATIONS FOR WALL AND CASEWORK INFORMATION ON A140.
F. REFER TO ENLARGED PLANS & ELEVATIONS FOR WALL AND CASEWORK INFORMATION ON A141.
G. REFER TO 2/A801 FOR TYPICAL ELEVATION OF WP-2.
H. WALL BASE TO BE RSF-1 - 18" H WITH SCHLUTER SCHIENE CAP. REFER TO 13/A801 FOR DETAIL.
I. COUNTERS TO BE SPS-2 AT TRANSACTION WINDOWS.
J. REFER TO A600 FOR LOCATION AND SIZES OF MIRRORS & WALL PAINT COLOR LOCATIONS.
L. REFER TO A810 FOR PT-1& 2 FLOORING DIRECTION. INSTALL STACK BOND.
M. REFER TO A142 FOR ENLARGED PLAN AND ELEVATION FOR CASEWORK MATERIALS.
N. REFER TO 2/A810 FOR FLOOR PATTERN.
O. REFER TO FINISH PLANS (A810 & A811) FOR CG (CORNER GUARD) LOCATIONS.
P. REFER TO A811 FOR FLOORING DIRECTION.
Q. REFER TO 18/A141 FOR ENLARGED PLANS AND CASEWORK MATERIALS.
R. WINDOW FILM (WF-1) ON INTERIOR GLASS. REFER TO A711 WINDOW ELEVATIONS.
S. REFER TO A811 FOR LOCATION OF FLOORING MATERIALS.
T. **ALL CONCRETE MASONRY UNIT SHOWER AREAS TO BE PAINTED AS FOLLOWS -** EPOXY BLOCK FILLER / EPOXY INTERMEDIATE COAT / EPOXY OR POLYSILOXANE FINISH COAT - (WET AREAS - DIRECT WATER CONTACT).

   a. PRIME COAT (BARE CMU AREAS ONLY): **B42W400 KEM CATI-COAT HS EPOXY FILLER**

   b. INTERMEDIATE COAT: **B58W610 MACROPOXY 646 FAST CURE EPOXY** TINTED TO THE COICE OF COLOR

   (or)

   c. FINISH COAT: **B80W501 SHER - LOXANE 800 TWO COMPONENT POLYSILOXANE** TINTED TO THE CHOICE OF COLOR. (NOTE: THIS FINISH COAT IS SUGGESTED FOR "WHITE OR NEAR WHITE COLORS".)
U. SOFFITS OVER DRINKING FOUNTAINS TO BE PNT-4. REFER TO REFLECTED CEILING PLANS & ELEVATIONS FOR LOCATIONS.

ROOM FINISH SCHEDULE

		FLOOR		BASE		WALL			CEILING		
NO.	ROOM NAME	FINISH	COLOR	MATERIAL	COLOR	MATERIAL	FINISH	COLOR	FINISH	COLOR	REMARKS
100	VESTIBULE	WOC	1	N	*	GL	PRF	*	GYP	PNT-7	
101	PUBLIC LOBBY	PT	1	MRB/RB	1/2	GL/GYP	PRF/PNT/WP/PT/CG	*/1/1/4/2	EXPD	PNT-6	A, B, L ,O , U
102	MEN'S	PT	2	TS	2	GYP	PT/PNT	2,3/1	GYP	PNT-7	E, L
103	JAN	CONC/SC-PS	*	RB	1	GYP	PNT/FRP	1/1	EXPD	*	D
104	WOMEN'S	PT	2	TS	2	GYP	PT/PNT	2,3/1	GYP	PNT-7	E, L
105	PUBLIC MEETING	CPT	1	MRB	1	GYP	PNT/PT	9,4/4	ACT/GYP	1/PNT-7	A, B, C
105A	STORAGE	CPT	1	RB	1	GYP	PNT	1	ACT	1	
106	SECURE LOBBY	PT	1	MRB/RB	1/2	GL/GYP	PRF/PNT/WP/PT/CG	*/1/1/4/2	EXPD	PNT-6	B, L, ,O
107	PUBLIC INTERVIEW	CPT	1	RB	1	GYP	PNT/AP	5/1	ACT	1	B
108	FINGER PRINT	LVT	2	RB	1	GYP	PNT	1, 9	ACT	1	A, B
109	CORRIDOR	LVT	1	RB	1	GYP	PNT	1,4	ACT	1	B, G, O, Q
110	CLERKS	CPT	1	RB	1	GL/GYP	PNT	9	ACT	1	A, I
111	WORK ROOM	CPT	1	RB	1	GYP	PNT	9	ACT	1	A
112	SUPERVISOR	CPT	1	RB	1	GYP	PNT	9	ACT	1	B, R
113	SOFT INTERVIEW	CPT	1	RB	1	GYP	PNT/AP	5/1	ACT	1	B
114	CORRIDOR	LVT/CONC/SC-PS	1/*	RB	1	GYP	PNT/WP/CG	1/2/1	ACT	1	B, G, O, S
115	ADMIN RECEP	CPT	1	RB	1	GYP	PNT	1,5	ACT	1	G, O
116	CONF	CPT	1	RB	1	GYP	PNT	2,9	ACT	1	B, R
117	CAPTAIN	CPT	1	RB	1	GYP	PNT	5,9	ACT	1	R
118	CHIEF	CPT	1	RB	1	GYP	PNT	5,9	ACT	1	R
119	CAPTAIN	CPT	1	RB	1	GYP	PNT	5,9	ACT	1	R
120	DEPUTY CHIEF	CPT	1	RB	1	GYP	PNT	5,9	ACT	1	R
121	RESTROOM	PT	2	TS	2	GYP	PT/PNT	2,4/1	GYP	PNT-7	E, L
122	CLASSROOM	CPT	1	RB	1	GYP	PNT/PT	9,4/4	ACT	1	A, B
123	POD	CPT	1	RB	1	GYP	PNT	1,5	ACT	1	B, R
124	POD	CPT	1	RB	1	GYP	PNT	1,5	ACT	1	B, R
125	POD	CPT	1	RB	1	GYP	PNT	1,5	ACT	1	B, R
126	MOTHER'S ROOM	CPT	1	RB	1	GYP	PNT	9	ACT	1	
127	SERVER	CONC/SC-PS	*	RB	1	GYP	PNT	1	ACT	1	
128	MAIL	LVT	1	RB	1	GYP	PNT/WP/CG	1/2/1	ACT	1	A, B
129	DETECTIVES	CPT	1	RB	1	GYP	PNT	1,5	ACT	1	B, R
130	LIEUTENANTS	CPT	1	RB	1	GYP	PNT	1,5	ACT	1	B,R
131	DETECTIVE STORAGE	CPT	1	RB	1	GYP	PNT	1	ACT	1	
132	CONFERENCE	CPT	1	RB	1	GYP	PNT	2,9	ACT	1	B, R
133	DARE STORAGE	CPT	1	RB	1	GYP	PNT	1	ACT	1	R
134	DARE OFFICER	CPT	1	RB	1	GYP	PNT	1,5	ACT	1	B, R
135	SERGEANT	CPT	1	RB	1	GYP	PNT	1,5	ACT	1	B,R
136	SUPPORT SERVICES SUPERVISOR	CPT	1	RB	1	GYP	PNT	1,5	ACT	1	B, R
137	SS STORAGE	CPT	1	RB	1	GYP	PNT	1	ACT	1	R
138	TRAINING	CPT	1	RB	1	GYP	PNT	1,5	ACT	1	B, R
139	SERGEANT	CPT	1	RB	1	GYP	PNT	1,5	ACT	1	B, R
140	LIEUTENANTS	CPT	1	RB	1	GYP	PNT	1,5	ACT	1	B, R
141	JANITOR	CONC/SC-PS	*	RB	1	GYP	PNT/FRP	1/1	EXPD	*	D
142	CORRIDOR	LVT	1	RB	1	GYP	PT/PNT/WP/CG	4/1/2/1	ACT	1	B, G, U
143	VESTIBULE	WOC	1	RB	1	GL/GYP	PRF/PNT	*/1,4	GYP	PNT-7	B, M
144	WOMEN'S	PT	2	TS	2	GYP	PT/PNT	2,3/1	GYP	PNT-7	E
145	MEN'S	PT	2	TS	2	GYP	PT/PNT	2,3/1	GYP	PNT-7	E
146	BREAK ROOM	LVT	2,3,4	RB	1	GYP	CT/PNT	1/1	EXPD	PNT-7	N, M
147	PATROL	LVT	1	RB	1	GYP	PNT	1	ACT	1	P
148	LIEUTENANT	CPT	1	RB	1	GYP	PNT	1,5	ACT	1	B, R
149	SHARED CORPORAL	CPT	1	RB	1	GYP	PNT	1,5	ACT	1	B, R
150	STORAGE AREA	CPT	1	RB	1	GYP	PNT	1	ACT	1	R
151	SHARED SERGEANT	CPT	1	RB	1	GYP	PNT	1,5	ACT	1	B, R
152	SHARED SERGEANT	CPT	1	RB	1	GYP	PNT	1,5	ACT	1	B, R
153	ROLL CALL	CPT	1	RB	1	GYP	PNT	9	ACT	1	A, R
154	LIEUTENANT	CPT	1	RB	1	GYP	PNT	1,5	ACT	1	B, R
155	MEN'S LOCKERS	EPXY	1	EPXY	1	CMU	PNT	1	EXPD	PNT-7	B, F, T
156	WOMEN'S LOCKERS	EPXY	1	EPXY	1	CMU	PNT	1	EXPD	PNT-7	B, F, T
157	ARMORY	CONC/SC-PS	*	N	*	CMU	PNT	1	EXPD	PNT-7	
158	SECURE ARMORY	CONC/SC-PS	*	N	*	CMU	PNT	1	EXPD	PNT-7	
159	FITNESS / TRAINING	RSF	1	RSF	1	GYP	PNT	3,8	EXPD	PNT-7	H, J
159A	FITNESS STORAGE	CONC/SC-PS	*	RB	1	GYP	PNT	3	EXPD	*	
160	GENERAL STORAGE	CONC/SC-PS	*	RB	1	GYP	PNT	1	EXPD	*	
161	MECHANICAL ROOM	CONC/SC-PS	*	RB	1	GYP	PNT	1	EXPD	*	
162	PROPERTY PROCESSING	CONC/SC-PS	*	RB	1	CMU	PNT	1	ACT	1	M
163	BULK TEMPORARY STORAGE 2	CONC/SC-PS	*	RB	1	CMU	PNT	1	EXPD	*	
164	SECURE PROCESSING	CONC/SC-PS	*	RB	1	CMU	PNT	1	EXPD	PNT-7	M
165	PROPERTY CLERK	CPT	1	RB	1	CMU	PNT	1	ACT	1	
166	EVIDENCE	CONC/SC-PS	*	RB	1	CMU	PNT	1	EXPD	PNT-7	
167	NARCOTICS	CONC/SC-PS	*	RB	1	CMU	PNT	1	EXPD	PNT-7	
168	GUNS	CONC/SC-PS	*	RB	1	CMU	PNT	1	EXPD	PNT-7	
169	BULK PERMANENT STORAGE	CONC/SC-PS	*	RB	1	CMU	PNT	1	EXPD	PNT-7	
170	SALLY PORT	CONC/SC-PS	*	*	*	CMU	PNT	3	EXPD	PNT-7	A
171	BULK TEMPORARY STORAGE 1	CONC/SC-PS	*	RB	1	CMU	PNT	1	EXPD	*	

FINISH AND MATERIAL SCHEDULE

ABBREVIATION	DESCRIPTION	MANUFACTURER	PATTERN	MODEL #	COLOR	SIZE	FINISH	NOTES	MANUFACTURER'S REP
ACT-1	ACOUSTICAL CEILING TILE	ARMSTRONG	ULTIMA BEVELED TEGULAR	1911	WHITE	24" x 24" x 3/4"	N/A	GRID: 15/16" PRELUDE WHITE	ELIZABETH MOON EMOON@ARMSTRONGCEILINGS.COM 816.216.2890
AP-1	ACOUSTICAL PANEL	FOCAL POINT	TRU TILE - MULTI TRACK	N/A	MIDNIGHT	23.75" X 23.75" X 9 MM THICK	N/A	INTERVIEW ROOMS; INSTALL VERTICAL PATTERN	LISA UPHOFF LUPHOFF@LAIWEB.NET 314.960.8554
CG-1	CORNER GUARD	WOLF GORDON	RAMPART	CGT-12-8	583 ALEXIS BLUE	1 1/2" WING SIZE X 8' H	N/A	AT ALL HIGH-TRAFFIC EXTERIOR CORNERS IN CORRIDORS AND OFFICE AREAS	DAVID SMITH DAVIDSMITH@WOLFGORDON.COM 314.302.8002
CG-2	CORNER GUARD	INPRO	160F FLUSH MOUNT CORNER GUARD	N/A	0536 HAZELWOOD	2" WING WITH 90 DEGREE CORNER - 8' H	N/A	AT CORNERS IN LOBBY - REFER TO A810	ANGIE STONER ASTONER@INPROCORP.COM 314.409.5100
CG-3	CORNER GUARD	INPRO	FLEXIBLE CORNER GUARD	N/A	0121 SADDLE	3/4" X 8' H	N/A	CORNERS WITH WP-1 AT CLERK WINDOWS IN LOBBY AREAS.	ANGIE STONER ASTONER@INPROCORP.COM 314.409.5100
CG-4	CORNER GUARD	INPRO	FLEXIBLE CORNER GUARD	N/A	0238 FEATHER	1 1/2" X 8' H	N/A	CORNERS WITH PNT-1	ANGIE STONER ASTONER@INPROCORP.COM 314.409.5100
CONC/SC-PS	SEALED CONCRETE	N/A	N/A	N/A	NONE	N/A	SEALED AND POLISHED	EVIDENCE, MECHANICAL, GENERAL STORAGE, ARMORY, AND JANITOR	N/A
CPT-1	CARPET	MILLIKEN	ENLIGHTEN	ELN207-107	GATHER	9.84" X 39.4"	STAINSMART	INSTALL: ASHLAR HALF DROP	NICK JANETT NICK.JANNETT@MILLIKEN.COM 314.912.8000
CT-1	CERAMIC TILE	DALTILE	COLOR WHEEL LINEAR	790	ARCTIC WHITE	4" X 12" X 5/16" THICK	MATTE	BACKSPLASH BREAKROOM; STACK BOND; GROUT: MAPEI 5107 IRON	TABATHA CURRY TABATHACURRY@DALTILE.COM 314.997.6970
EXPY-1	EPOXY FLOOR	SIKA	SIKA FLOOR DECO DUR FLAKE FX	N/A	SAPHIRE	1/8" THICK	TOPCOAT 217 REFER TO SPECIFICATIONS	WITH INTEGRAL 8" H COVE BASE. REFER TO12/A801 FOR DETAIL | LOCKER ROOMS	RANDELL SHOEMAKER SHOEMAKER.RANDELL@US.SIKA.COM 469.849.3623
FRP-1	FIBERGLASS REINFORCED PANEL	CRANE COMPOSITES	GLASBORD EMBOSSED PANELS	FXA	85 WHITE	0.090" THICK | 4' x 8' PANEL	EMBOSSED GLOSS	JANITOR ROOMS	FBM - FOUNDATION BUILDING MATERIALS, 417.864.6622
LVT-1	LUXURY VINYL FLOOR	KARNDEAN	VAN GOGH	VGW115T	NATURAL PRIME OAK	7" X 48" X 3 MM	K GUARD AND PU COATING	WOOD LOOK	LAURIE LIBOWITZ LAURIE.LIBOWITZ@KARNDEAN.COM 816.859.2237
LVT-2	LUXURY VINYL FLOOR	SHAW CONTRACT	CODED	4143V-43429	INFORM	6" X 48" X 5" MM THICK	EXOGUARD	BREAKROOM FLOOR - BLUE	AFTEN ZURLENE AFTEN.ZURLIENE@SHAWCONTRACT 314.440.2010
LVT-3	LUXURY VINYL FLOOR	SHAW CONTRACT	CODED	4143V- 43100	CONVEY	6" X 48" X 5" MM THICK	EXOGUARD	BREAKROOM FLOOR - LIGHT GREY	AFTEN ZURLENE AFTEN.ZURLIENE@SHAWCONTRACT 314.440.2010
LVT-4	LUXURY VINYL FLOOR	SHAW CONTRACT	CODED	4143V-43595	ENGAGE	6" X 48" X 5" MM THICK	EXOGUARD	BREAKROOM FLOOR - DARK GREY	AMY ELLIS AMY.ELLIS@TARKETT.COM 314.348.7677
MRB-1	MILLWORK RUBBER BASE	JOHNSONITE	REVEAL	MW-40-F	BLACK	4.25" H	RUBBER	AT PT-1 AND PUBLIC MEETING ROOM	AMY ELLIS AMY.ELLIS@TARKETT.COM 314.348.7677
PLAM-1	PLASTIC LAMINATE	FORMICA	N/A	6698-58	PALOMA POLAR	4' X 8' SHEETS	MATTE	COUNTERS: REFER TO SHEETS A141/ A142/ A600 FOR LOCATIONS	ANNE YOUNG ANN.YOUNG@AMERHART.COM 314..221.2434
PLAM-2	PLASTIC LAMINATE	WILSONART	N/A	5014K-19	BATTLESHIP	4' X 8' SHEETS	LENO WEAVE FINISH	BASE CABINETS: REFER TO SHEETS A141/ A142/ A600 FOR LOCATIONS	MARIA LAMMERT MLAMMERT@COMPIDISTRIBUTORS.COM 314.809.5114
PLAM-3	PLASTIC LAMINATE	LAMINART	N/A	3124-E	CLASSIC CHERRY	4' X 8' SHEETS	VELLUM FINISH	WOOD LOOK FOR CASEWORK - NO SUBSTITUTIONS	SARAH CAMP SARAH.CAMP@LAMINART.COM 314.422.2340
PLAM-4	PLASTIC LAMINATE	WILSONART	N/A	D92-60	DOVE GREY	4' X 8' SHEETS	MATTE	WALL CABINETS: REFER TO SHEETS A141/ A142/ A600 FOR LOCATIONS	MARIA LAMMERT MLAMMERT@COMPIDISTRIBUTORS.COM 314.809.5114
PNT-1	PAINT	SHERWIN WILLIAMS	N/A	SW7063	NEBULOUS WHITE	N/A	REFER TO SPECIFICATIONS	GENERAL WALL PAINT	HANK MEINKING HANK.MEINKING@SHERWIN.COM 314.281.7485
PNT-2	PAINT	PITTSBURGH PAINT	N/A	PPG-1001-6	KNIGHT'S ARMOR	N/A	REFER TO SPECIFICATIONS	ACCENT PAINT - DARK GREY	DREW HARRIS DREWHARRIS@PPG.COM 618.381.5307
PNT-3	PAINT	PITTSBURGH PAINT	N/A	PPG-1010-4	STEPPING STONES	N/A	REFER TO SPECIFICATIONS	SALLY PORT/FITNESS ROOM	DREW HARRIS DREWHARRIS@PPG.COM 618.381.5307
PNT-4	PAINT	PITTSBURGH PAINT	N/A	PPG-1160-7	BLUE TANG	N/A	REFER TO SPECIFICATIONS	ACCENT - BRIGHT BLUE	DREW HARRIS DREWHARRIS@PPG.COM 618.381.5307
PNT-5	PAINT	PITTSBURGH PAINT	N/A	PPG-1163-6	BLUE FJORD	N/A	REFER TO SPECIFICATIONS	ACCENT PAINT - SOFT BLUE	DREW HARRIS DREWHARRIS@PPG.COM 618.381.5307
PNT-6	PAINT	SHERWIN WILLIAMS	N/A	SW6258	TRICORN BLACK	N/A	REFER TO SPECIFICATIONS	HOLLOW METAL DOORS / DOOR FRAMES PAINT	HANK MEINKING HANK.MEINKING@SHERWIN.COM 314.281.7485
PNT-7	PAINT	SHERWIN WILLIAMS	N/A	SW7757	HIGH REFLECTIVE WHITE	N/A	REFER TO SPECIFICATIONS	GENERAL CEILING PAINT	HANK MEINKING HANK.MEINKING@SHERWIN.COM 314.281.7485
PNT-8	PAINT	SHERWIN WILLIAMS	N/A	SW6886	INVIGORATE	N/A	REFER TO SPECIFICATIONS	ACCENT COLOR - ORANGE	HANK MEINKING HANK.MEINKING@SHERWIN.COM 314.281.7485
PNT-9	PAINT	SHERWIN WILLIAMS	N/A	SW7072	ONLINE	N/A	REFER TO SPECIFICATIONS	OFFICES/CONFERENCE ROOM	HANK MEINKING HANK.MEINKING@SHERWIN.COM 314.281.7485
PT-1	PORCELAIN TILE	ATLAS CONCORDE	COVE	N/A	STORM	23 5/8" X 47 1/4" X 9 MM THICK- RECTIFIED	MATTE	LOBBY FLOOR - RUNNING BOND - REFER TO A810 FOR DIRECTION; GROUT: MAPEI 5047 CHARCOAL	AMY HOTCHKISS AHOTCHKISS@MIDWESTTILE.COM 314.526.7875
PT-2	PORCELAIN TILE	ATLAS CONCORDE	COVE	N/A	STORM	11 3/4" X 23 5/8" X 9MM THICK	MATTE	RESTROOM FLOOR AND WALL; GROUT: MAPEI 5047 CHARCOAL	AMY HOTCHKISS AHOTCHKISS@MIDWESTTILE.COM 314.526.7875
PT-3	PORCELAIN TILE	DEL CONCA USA	ESSENTIAL RECTIFIED	G8ETDESIGNR	DESIGN RECTIFIED	12" X 24"	MATTE	ACCENT RESTROOM WET WALL TILE; GROUT: MAPEI 510 BLACK	AMY HOTCHKISS AHOTCHKISS@MIDWESTTILE.COM 314.526.7875
PT-4	PORCELAIN TILE	PLATFORM SURFACES	KIT-KAT	N/A	MIDNIGHT	4.5" X 9"	GLOSSY	RESTROOM WET WALL/ACCENT WALL IN LOBBY AT WATER COOLER; GROUT: MAPEI 510 BLACK	JORDAN HANGGE JHANGGE@PLATFORMSURFACES.COM 314.591.9560
RB-1	RUBBER BASE	JOHNSONITE	TRADITIONAL	DC-40	BLACK	4" H	RUBBER	GENERAL WALL BASE	AMY ELLIS AMY.ELLIS@TARKETT.COM 314.348.7677
RB-2	RUBBER BASE	JOHNSONITE	SHOE MOULDING	SHU-01-TA7	RUSTY NAIL	1 1/2" H	RUBBER	AT WP-1 IN LOBBY. NO SUBSTITUTIONS	AMY ELLIS AMY.ELLIS@TARKETT.COM 314.348.7677
RSF-1	RUBBER SPORTS FLOOR	REGUPOL	AKTIV	AK10101	GREY HOUND	3/8"" THICK x 48" W	RUBBER	FITNESS / TRAINING	KY BURGESS KY@SPECATHLETIC.COM 314.432.1825
SPS-1	SOLID POLYMER SURFACE	FORMICA	EVERFORM	770	BOTTLE GLASS QUARTZ	1/2" THICK	GLOSS	COUNTERTOP BREAKROOM	ANNE YOUNG ANN.YOUNG@AMERHART.COM 314..221.2434
SPS-2	SOLID POLYMER SURFACE	CORIAN	N/A	N/A	ANTARCTICA	1/2" THICK	GLOSS	COUNTERTOP RESTROOMS	KRISTY RINNE KRINNE@HLLMARK.COM 314.520.0781
TP-1	TOILET PARTITION	SCANTON PRODUCTS	HINY HIDERS	N/A	BLACK	66" H ENCLOSURES	ORANGE PEEL	TOILET PARTITIONS - REFER TO SPECS FOR HARDWARE INFO	MIKE BURKE MIKE.BURKE@AZEKCO.COM 219.309.4722
TS-1	TRANSITION	WOLF GORDON	TRIM FOR WP-2	WC-98-10	153 ALEXIS BLUE	10' LENGTH	N/A	TRANSITION AT WALL PROTECTION; REFER TO 1/A801 FOR DETAIL	ANGIE STONER ASTONER@INPROCORP.COM 314.409.5100
TS-2	TRANSITION	SCHLUTER	DILEX-AHK	AHK 1S 100 AE	ANODIZED ALUMINUM	3/8" -8'-2 1/2" LENGTH	SATIN ANODIZED ALUMINUM	COVE BASE FOR RESTROOMS; REFER TO 3/A801 FOR DETAIL.	ALEX WAGGONER AWAGGONER@SCHLUTER.COM 816.666.3190
TS-3	TRANSITION	SCHLUTER	SHIENE	A100 AE	ANODIZED ALUMINUM	3/8" -8'-2 1/2" LENGTH	SATIN ANODIZED ALUMINUM	TILE TO TILE TRANSITION & WALL TILE EDGE PROTECTION; REFER TO 4&5/A801	ALEX WAGGONER AWAGGONER@SCHLUTER.COM 816.666.3190
TS-4	TRANSITION	SCHLUTER	RENO-V	AEVT100 B20	ANODIZED ALUMINUM	3/8" - 8'-2 1/2" LENGTH	SATIN ANODIZED ALUMINUM	RSF TO CONC. - REFER TO 6/A801 FOR DETAIL	ALEX WAGGONER AWAGGONER@SCHLUTER.COM 816.666.3190
TS-5	TRANSITION	JOHNSONITE	SLIM LINES	SLT-40-A	BLACK	1/4" TO 1/8"	RUBBER	LVT TO LVT TRANSITION & CARPET TO LVT; REFER TO 7/A801 FOR DETAIL	AMY ELLIS AMY.ELLIS@TARKETT.COM 314.348.7677
TS-6	TRANSITION	JOHNSONITE	WHEELED TRAFFIC	CTA-40-J	BLACK	1/4" TO FLOOR	RUBBER	CARPET TO CONCRETE TRANSITION; REFER TO 8/A801 FOR DETAIL	AMY ELLIS AMY.ELLIS@TARKETT.COM 314.348.7677
TS-7	TRANSITION	JOHNSONITE	EDGE GUARD	EG-49-J	BEIGE	3/16" TO FLOOR	RUBBER	LVT TO CONCRETE TRANSITION; REFER TO 9/A801 FOR DETAIL.	AMY ELLIS AMY.ELLIS@TARKETT.COM 314.348.7677
TS-8	TRANSITION	STONE & TILE	ENGINEERED MARBLE THRESHOLD	THD2BE2X36DB	BOTTOCHINO	2" X 36" X 5/8"	POLISHED	LVT TO EPOXY THRESHOLD AT DOOR; REFER TO 10/A801 FOR DETAIL	STONEANDTILESHOPPE.COM 877.426.1500
TS-9	TRANSITION	SCHLUTER	RENO-U	AEU 100	ANODIZED ALUMINUM	3/8" TO 4 MM - 8'-2 1/2" LENGTH	SATIN ANODIZED ALUMINUM	PT TO LVT-1/CPT- REFER TO 11/A801 FOR DETAIL	ALEX WAGGONER AWAGGONER@SCHLUTER.COM 816.666.3190
WD-1	WOOD DOORS	VT INDUSTRIES	PLAIN SLICED WHITE BIRCH	20230103131	RA18 RAVINE	N/A	REFER TO SPECIFICATIONS	WOOD DOOR VENEER - BOOK MATCH - DOORS MUST MATCH SPECIFICED STAIN; COLOR: RA18 RAVINE	MARK REISCH MREISCH@VTINDUSTRIES.COM 712.369.0747
WF-1	WINDOW FILM	DECORATIVE FILMS	FEATHER GRADIENT	SXJ-0547	N/A	71" HEIGHT X 95' ROLL	SILICONE COATED	INTERIOR OFFICE WINDOWS/GLASS DEMOUNTABLE WALLS	DECORATIVE FILMS.COM
WOC-1	WALK OFF CARPET	BENTLEY	ROUGH IDEA SHEAR	8RN24-800115	OUTLINE	24" X 24"	BACKING: AFIRMA II HARDBACK	VESTIBULES - INSTALL : ASHLAR PATTERN	TIFFANY AUER TIFFANY.AUER@BENTLEYMILLS.COM 314.440.6235
WP-1	WALL PROTECTION	WOLF GORDON	GRAIN	GOH 43289292	REDWOOD	52"/54"x 81' ROLL	SURCOAT STAIN AND ABRASION RESISTANT	LOBBY WOOD ACCENT - GRAIN PATTERN TO RUN VERTICAL. NO SUBSTITUTIONS	DAVID SMITH DAVIDSMITH@WOLFGORDON.COM 314.302.8002
WP-2	WALL PROTECTION	WOLF GORDON	SPARTA	GOH 33708382	DENIM	52"/54"x 81' ROLL	SURCOAT STAIN AND ABRASION RESISTANT	CORRIDORS: INSTALL UP TO 4'-0" AFF WITH MATCHING TRIM PIECE TS-1	DAVID SMITH DAVIDSMITH@WOLFGORDON.COM 314.302.8002
WS-1	WINDOW SHADE	SWF CONTRACT	CROSSATCH	C8218	EBONY/STONE	126" WIDE	BACTERIA & FUNGAL RESISTANCE	3% OPENESS FACTOR - REFER TO A121/A122 KEYNOTES FOR LOCATIONS	DUSTIN PALMER DPALMER@GOLTERMANSABO.COM 314.691.0375
WS-2	WINDOW SHADE	SWF CONTRACT	CROSSATCH	C8318	EBONY/STONE	126" WIDE	BACTERIA & FUNGAL RESISTANCE	5% OPENESS FACTOR - REFER TO A121/A122 KEYNOTES FOR LOCATIONS	DUSTIN PALMER DPALMER@GOLTERMANSABO.COM 314.691.0375

PRINTED: 6/11/2025 11:45:01 AM

NIXA POLICE DEPARTMENT

305 N LEEANN DR
NIXA, MO 65714

112 S. Main St., Nixa, MO
65714 Ph: 417-724-8553

Architecture / Interior Design / Graphics
1401 S. Brentwood Blvd. / Suite 575 / St. Louis, Missouri 63144
314-725-5588 / arch@chiodini.com

Reissue Date

Professional of Record

STATE OF MISSOURI
NATHAN P. RAPP
NUMBER
ARCHITECT

DATE 2025-06-11

Copyright 2025 ©
These prints are the property of the architect and shall be usedonly for the project referenced above

Architect
CC / NPR

Project #
24-003

Date
2025-06-11

Drawing Title:
INTERIOR FINISH SCHEDULE AND LEGEND

Sheet:
A800

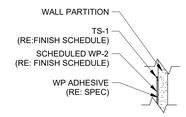

1 TS - 1 WP TRIM DETAIL
3" = 1'-0"

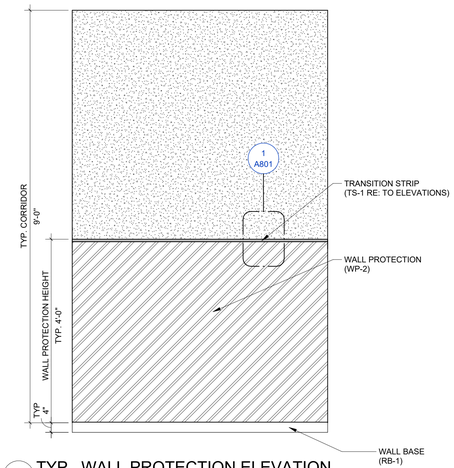

2 TYP. WALL PROTECTION ELEVATION
12" = 1'-0"

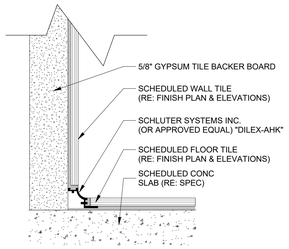

3 TS-2 COVE BASE
12" = 1'-0"

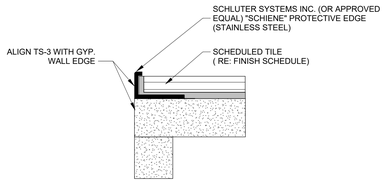

4 TS-3 TILE @ END OF WALL
12" = 1'-0"

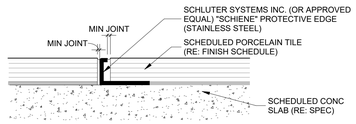

5 TS-3 TILE TO TILE
12" = 1'-0"

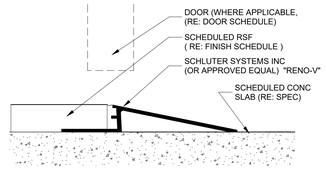

6 TS-4 - RSF TO CONC
12" = 1'-0"

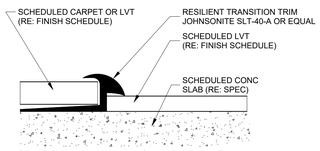

7 TS- 5 5 MM LVT OR CPT TO 3MM LVT
12" = 1'-0"

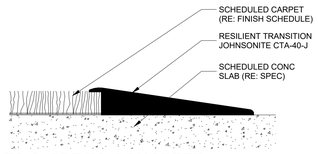

8 TS-6 CPT TO CONCRETE
12" = 1'-0"

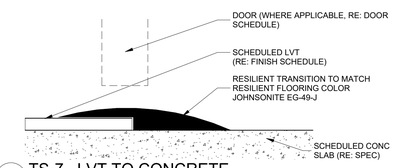

9 TS-7 LVT TO CONCRETE
12" = 1'-0"

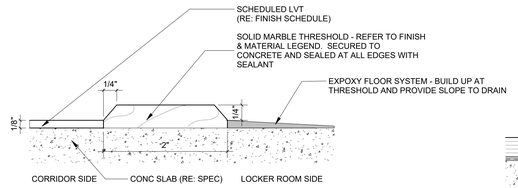

10 TS-8 LVT TO EPOXY THRESHOLD
12" = 1'-0"

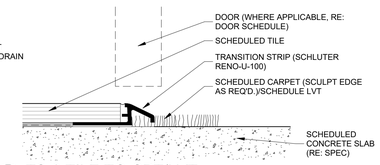

11 TS-9 TILE TO CPT/LVT
12" = 1'-0"

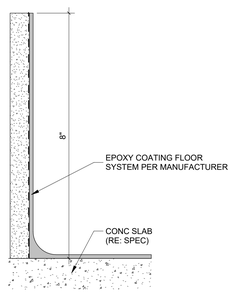

12 EPOXY COVE BASE DETAIL
6" = 1'-0"

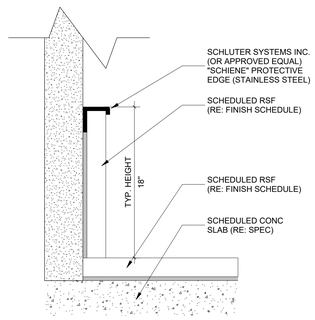

13 RSF TRANSITION DETAIL
12" = 1'-0"

PRINTED: 6/11/2025 11:45:04 AM

NIXA POLICE DEPARTMENT

305 N LEEANN DR
NIXA, MO 65714

INSIGHT DESIGN IDeA ARCHITECTS
112 S. Main St., Nixa, MO 65714 Ph: 417-724-8553

CJD Engineering | Energy | Innovation

olsson

METTEMEYER ENGINEERING LLC

Chiodini ARCHITECTS
Architecture / Interior Design / Graphics
1401 S. Brentwood Blvd. | Suite 975 | St. Louis, Missouri 63144
314-725-0080 | arch@chiodini.com

Reissue Date

Professional of Record

STATE OF MISSOURI
NATHAN P. RAPP
NUMBER A-6101
ARCHITECT

DATE 2025-06-11

Copyright 2025 ©
These prints are the property of the architect and shall be usedonly for the project referenced above

Architect
CC/ KM /NPR

Project #
24-003

Date
2025-06-11

Drawing Title:
INTERIOR FINISH DETAILS

Sheet:
A801

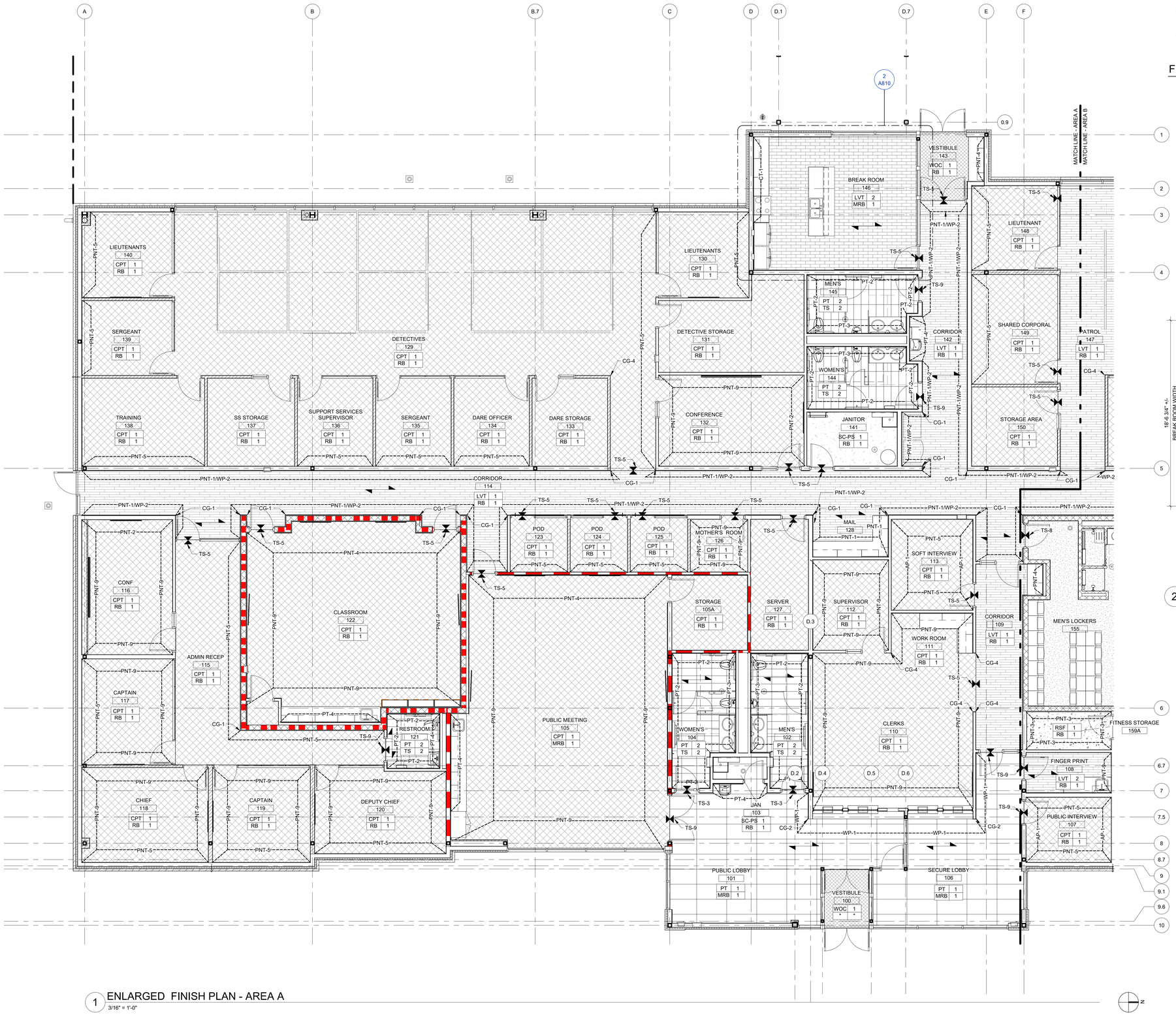

1 ENLARGED FINISH PLAN - AREA A
3/16" = 1'-0"

GENERAL FINISH PLAN NOTES

A. REFER TO ELEVATIONS FOR CASEWORK FINISH
B. FLOOR GROUT TO BE SANDED, WALL GROUT TO BE NON-SANDED
C. REFER TO ELEVATIONS FOR EXTENT OF WALL TILE
D. ALL FLOOR GROUT TO RECEIVE SEALER
E. PROVIDE CRACK SUPPRESSION SETTING SYSTEM AT PAVER TILES RUNNER OVER CONCRETE FLOOR JOINTS
F. FRP AT MOP SINK - 48" A.F.F. - 12" PAST SINK - BOTH WALLS
G. ALL EXPOSED PIPING BELOW WALL HUNG SINKS TO BE PROTECTED PER ADA STANDARDS
H. ALL PAINT ON WALLS IN TOILET ROOMS TO HAVE SEMI-GLOSS FINISH, U.N.O.
ALL HOLLOW METAL FRAMES TO HAVE A SEMI-GLOSS PAINT FINISH, U.N.O.
ALL PARTITIONS TO HAVE AN EGGSHELL PAINT FINISH, U.N.O. ALL GYP. BOARD CEILINGS TO HAVE A FLAT FINISH, U.N.O.
I. ALL GYP. BOARD CEILINGS TO BE PAINTED PNT-X, U.N.O.
J. REFERENCE SPECIFICATIONS FOR ADDITIONAL FINISH INFORMATION.

FINISH PLAN SYMBOLS & MATERIAL LEGEND

FLOOR TRANSITION
X-X WALL FINISH
FLOOR MATERIAL ABBREVIATION
CPT 1 FLOOR MATERIAL NUMBER
RB 1 BASE MATERIAL NUMBER
BASE MATERIAL ABBREVIATION
CONC-1
CPT-1
EPXY-1
LVT-1
LVT-2
PT-1
PT-2
RSF-1
WOC-1

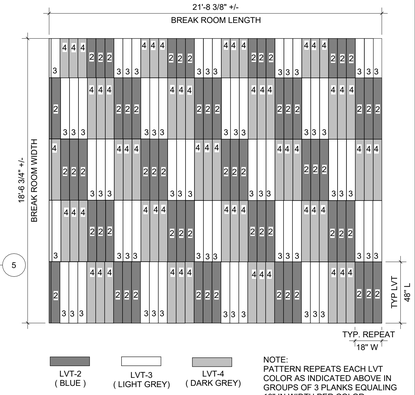

NOTE:
PATTERN REPEATS EACH LVT COLOR AS INDICATED ABOVE IN GROUPS OF 3 PLANKS EQUALING 18" IN WIDTH PER COLOR.

2 BREAK ROOM 146 - FLOORING INSTALL PATTERN
1/4" = 1'-0"

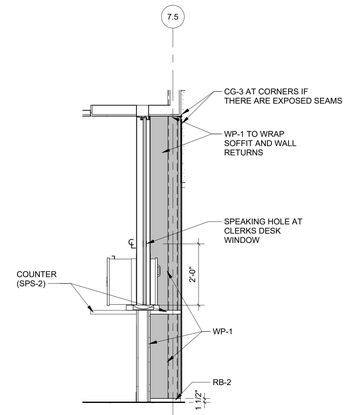

3 SECTION AT CLERK WINDOW
1/2" = 1'-0"

NIXA POLICE DEPARTMENT

305 N LEEANN DR
NIXA, MO 65714

INSIGHT DESIGN IDeA ARCHITECTS
112 S. Main St., Nixa, MO 65714 Ph: 417-724-8553

CJD Engineering | Energy | Innovation

olsson

METTEMEYER ENGINEERING LLC

Chiodini ARCHITECTS
Architecture / Interior Design / Graphics
1401 S. Brentwood Blvd. | Suite 975 | St. Louis, Missouri 63144
314-726-0888 | info@chiodini.com

Reissue Date

Professional of Record

STATE OF MISSOURI NATHAN P. RAPP NUMBER A-6101 ARCHITECT

DATE 2025-06-11

Copyright 2025 ©
These prints are the property of the architect and shall be usedonly for the project referenced above

Architect
CC/ KM /NPR

Project #
24-003

Date
2025-06-11

Drawing Title:
ENLARGED FINISH PLAN - AREA A

Sheet:
A810

PRIN'TED: 6/11/2025 11:45:09 AM

GENERAL FINISH PLAN NOTES

A. REFER TO ELEVATIONS FOR CASEWORK FINISH
B. FLOOR GROUT TO BE SANDED, WALL GROUT TO BE NON-SANDED
C. REFER TO ELEVATIONS FOR EXTENT OF WALL TILE
D. ALL FLOOR GROUT TO RECEIVE SEALER
E. PROVIDE CRACK SUPPRESSION SETTING SYSTEM AT PAVER TILES RUNNER OVER CONCRETE FLOOR JOINTS
F. FRP AT MOP SINK - 48" A.F.F. - 12" PAST SINK - BOTH WALLS
G. ALL EXPOSED PIPING BELOW WALL HUNG SINKS TO BE PROTECTED PER ADA STANDARDS
H. ALL PAINT ON WALLS IN TOILET ROOMS TO HAVE SEMI-GLOSS FINISH, U.N.O. ALL HOLLOW METAL FRAMES TO HAVE A SEMI-GLOSS PAINT FINISH, U.N.O. ALL PARTITIONS TO HAVE AN EGGSHELL PAINT FINISH, U.N.O. ALL GYP. BOARD CEILINGS TO HAVE A FLAT FINISH, U.N.O.
I. ALL GYP. BOARD CEILINGS TO BE PAINTED PNT-X, U.N.O.
J. REFERENCE SPECIFICATIONS FOR ADDITIONAL FINISH INFORMATION.

FINISH PLAN SYMBOLS & MATERIAL LEGEND

FLOOR TRANSITION
X-X — WALL FINISH
CPT 1 / RB 1 — FLOOR MATERIAL ABBREVIATION; FLOOR MATERIAL NUMBER; BASE MATERIAL NUMBER; BASE MATERIAL ABBREVIATION
CONC-1
CPT-1
EPXY-1
LVT-1
LVT-2
PT-1
PT-2
RSF-1
WOC-1

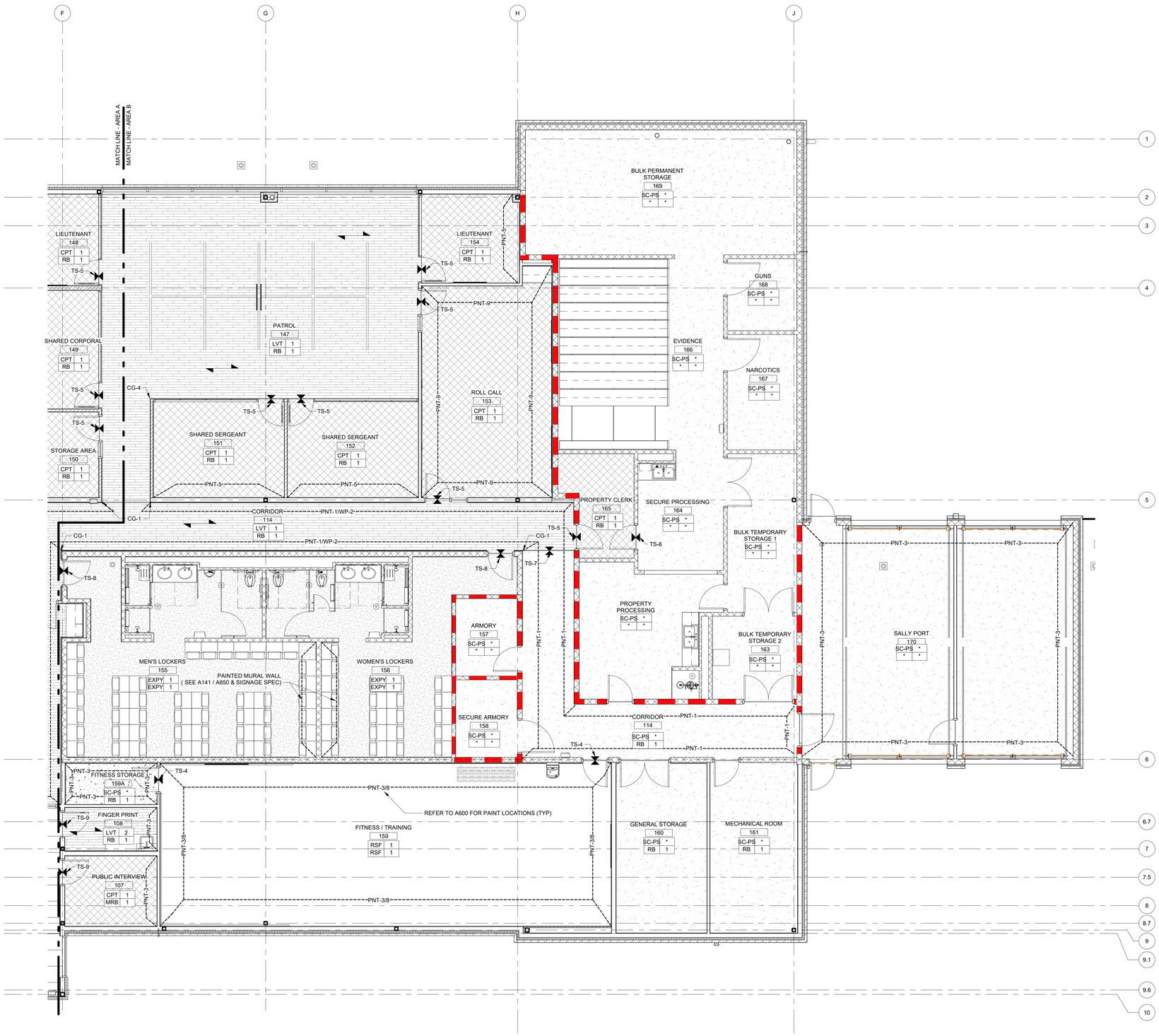

1 ENLARGED FINISH PLAN - AREA B
3/16" = 1'-0"

NIXA POLICE DEPARTMENT

305 N LEEANN DR
NIXA, MO 65714

IDeA ARCHITECTS
112 S. Main St., Nixa, MO 65714 Ph: 417-724-8553
CJD Engineering | Energy | Innovation
olsson
METTEMEYER ENGINEERING LLC
Chiodini ARCHITECTS
Architecture / Interior Design / Graphics
1401 S. Brentwood Blvd. | Suite 575 | St. Louis, Missouri 63144
314-725-0081 | info@chiodini.com

Reissue Date

Professional of Record

STATE OF MISSOURI — NATHAN P. RAPP — NUMBER A-6001 — ARCHITECT

DATE 2025-06-11

Copyright 2025 ©
These prints are the property of the architect and shall be usedonly for the project referenced above

Architect
CC/ KM /NPR

Project #
24-003

Date
2025-06-11

Drawing Title:
ENLARGED FINISH PLAN - AREA B

Sheet:
A811

PRINTED: 6/11/2025 11:45:11 AM

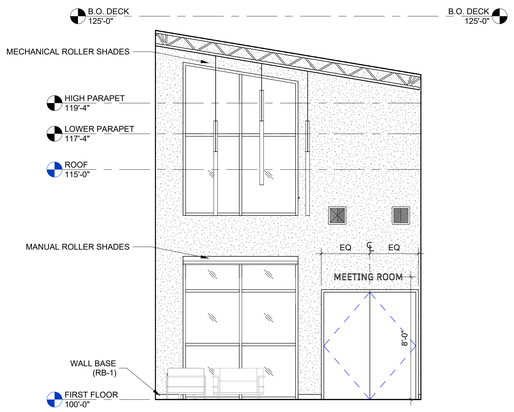

5 101 PUBLIC LOBBY - SOUTH ELEVATION
1/4" = 1'-0"

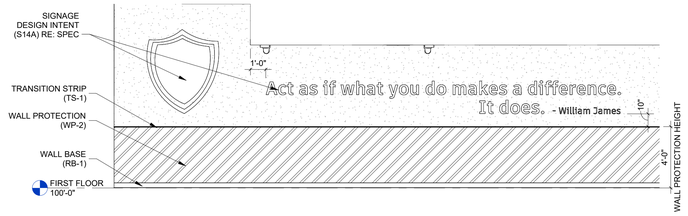

4 142 CORRIDOR - NORTH ELEVATION
1/4" = 1'-0"

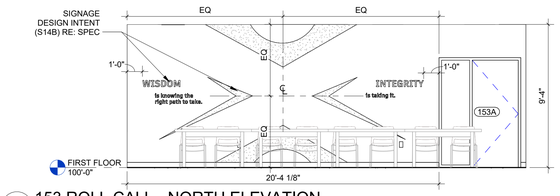

2 153 ROLL CALL - NORTH ELEVATION
1/4" = 1'-0"

SIGNAGE LEGEND

- S01 FRONT DESK HOURS & AFTER HOURS ASSIST. - WHITE VINYL LETTERS
- S02 PUSH BUTTON FOR POLICE ASSIST. - POLYMER SIGN
- S03 POLICE ASSISTANCE PHONE - POLYMER SIGN
- S04 WELCOME - DIMENSIONAL STAINLESS STEEL LETTERS ABOVE 101 CLERK WINDOW
- S05 MEETING ROOM DEDICATION NAME - DIMENSIONAL STAINLESS STEEL LETTERS ABOVE 105 DOUBLE DOORS
- S06 RESTRICTED AREA - POLYMER SIGN
- S07 ROOM NAME - POLYMER SIGN
- S08 RESTROOM - POLYMER SIGN
- S09 STANDARD ROOM NAME & NUMBER WITH PAPER INSERT - POLYMER SIGN
- S10 AED SIGNAGE - POLYMER PLAQUE
- S11 LOCKER ROOM MURAL - CUSTOM STENCIL
- S12A FITNESS/TRAINING QUOTES - VINYL LETTERS
- S12B FITNESS/TRAINING DECAL - CUSTOM WALL DECAL
- S13 RECOGNITION WALL - WHITE DIMENSIONAL VINYL LETTERS AND FLAG GRAPHIC
- S14A ROLE CALL QUOTE - VINYL LETTERS + DECAL
- S14B CORRIDOR QUOTE - BLACK VINYL LETTERS
- S15 STORM SHELTER - POLYMER SIGN
- S16 STORM SHELTER IDENTIFICATION MAP - POLYMER SIGN
- S17 STORM SHELTER INFORMATIONAL SIGNAGE - POLYMER SIGN
- S18 NOTICE NOW LEAVING TORNADO SHELTER - POLYMER SIGN
- ES01 RESTRICTED AREA, POLICE VEHICLES ONLY - EXTERIOR POST MOUNTED SIGN
- ES02 RESTRICTED AREA, POLICE VEHICLES ONLY - EXTERIOR GATE MOUNTED SIGN
- ES03 SALLY PORT DOOR NUMBER - EXTERIOR BLACK DIMENSIONAL LETTERS
- ES04 SAFE EXCHANGE ZONE SIGNAGE - EXTERIOR POST MOUNTED SIGN
- ES05 NO PARKING SIGN - EXTERIOR POST MOUNTED SIGN (RE: A200 FOR SIZE AND LAYOUT)
- ES06 MAIN ENTRY BACKLIT NIXA PD CREST SIGN - EXTERIOR MONUMENT SIGN
- ES07 BRONZE DEDICATION PLAQUE - EXTERIOR SIGNAGE
- ES08 POLICE BLACK VINYL LETTERS - EXTERIOR SIGNAGE ON POLICE GLOBES
- ES09 RESTRICTED AREA - EXTERIOR VINYL SIGN
- ES10 EXTERIOR MONUMENT SIGN
- ES11 MAIN ENTRY DOOR SIGNAGE - EXTERIOR VINYL SIGN
- ES12 ACCESSIBLE PARKING SIGNAGE - POST MOUNT (RE: CIVIL FOR DETAILS)
- ES13 BUILDING NUMBER SIGNAGE - WHITE VINYL LETTERS

NOTE:
1) REFER TO SPECIFICATIONS
2) REFER TO A050 ARCHITECTURAL SITE PLAN AND A200 FOR LOCATION OF EXTERIOR SITE SIGNAGE.
3) REFER TO A850 FURNITURE & SIGNAGE PLAN FOR INTERIOR LOCATIONS OF SIGNAGE.

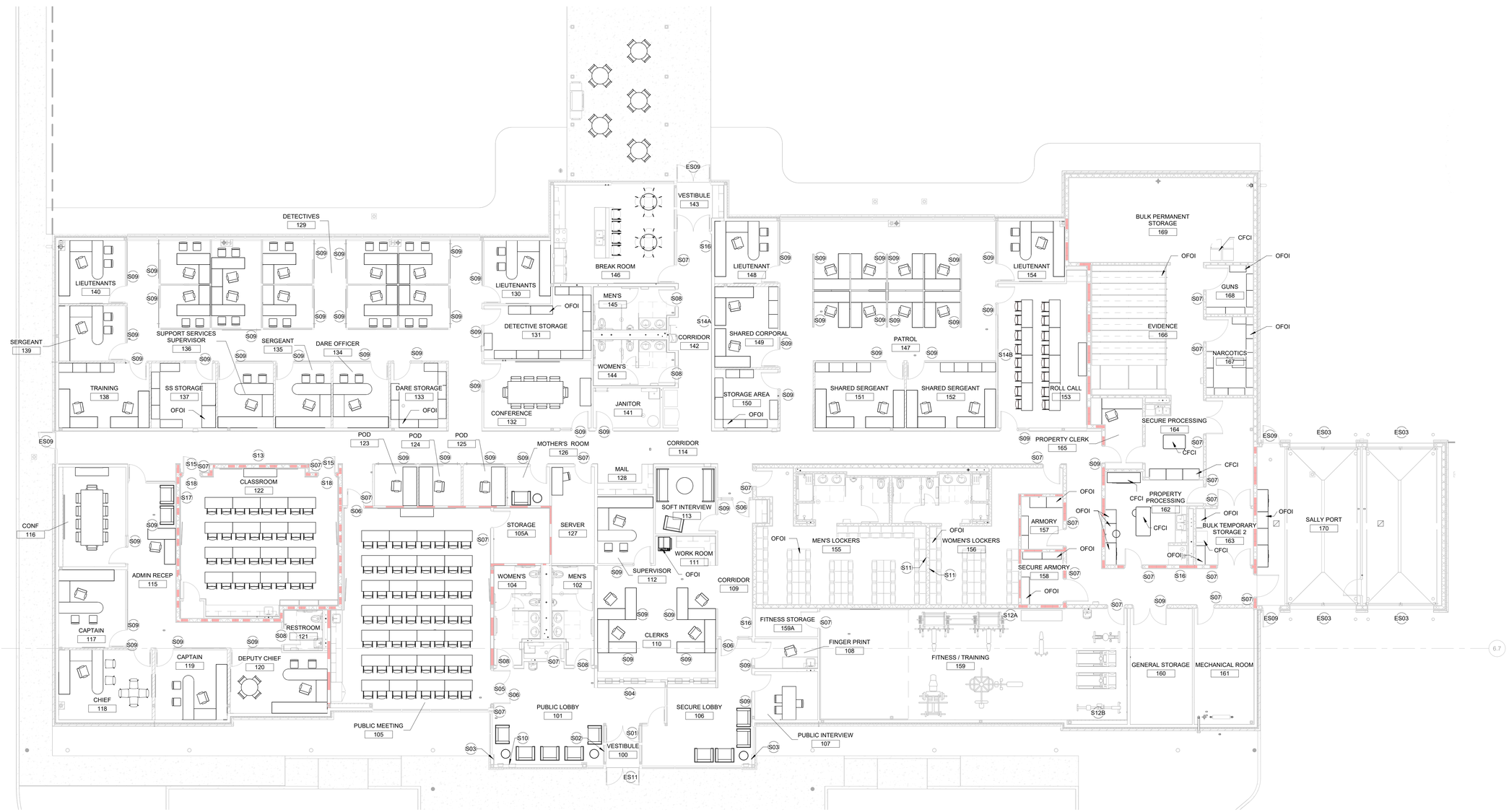

1 FIRST FLOOR FURNITURE/SIGNAGE PLAN
1/8" = 1'-0"

PRINTED: 6/11/2025 11:45:17 AM

NIXA POLICE DEPARTMENT

305 N LEEANN DR
NIXA, MO 65714

INSIGHT DESIGN IDeA ARCHITECTS
112 S. Main St., Nixa, MO 65714 Ph: 417-724-8553

CJD Engineering | Energy | Innovation

olsson

METTEMEYER ENGINEERING LLC

Chiodini ARCHITECTS
Architecture / Interior Design / Graphics
1401 S. Brentwood Blvd. | Suite 575 | St. Louis, Missouri 63144
314-725-0088 | info@chiodini.com

Reissue Date

Professional of Record

STATE OF MISSOURI
NATHAN P. RAPP
NUMBER A-2001038772
ARCHITECT

DATE 2025-06-11

Copyright 2025 ©
These prints are the property of the architect and shall be usedonly for the project referenced above

Architect
CC/ KM /NPR

Project #
24-003

Date
2025-06-11

Drawing Title:
FURNITURE/SIGNAGE PLAN

Sheet:
A850

GENERAL PERSPECTIVE NOTES:

A. PERSPECTIVES SHOWN ARE FOR GRAPHIC REPRESENTATION AND GENERAL UNDERSTANDING OF FORM, UNLESS NOTED OTHERWISE.
B. PERSPECTIVES DO NOT SUPERSEDE THE PROJECT MANUAL, PLANS, ELEVATIONS, SECTIONS, DETAILS, ETC FOUND IN THE CONTRACT DOCUMENTS, UNLESS NOTED OTHERWISE.
C. PERSPECTIVES ARE NOT TO SCALE (NTO), UNLESS NOTED OTHERWISE.

1 BUILDING EXTERIOR - FRONT
12" = 1'-0"

2 BUILDING EXTERIOR - REAR
12" = 1'-0"

3 BREAKROOM
12" = 1'-0"

4 PUBLIC MEETING ROOM
12" = 1'-0"

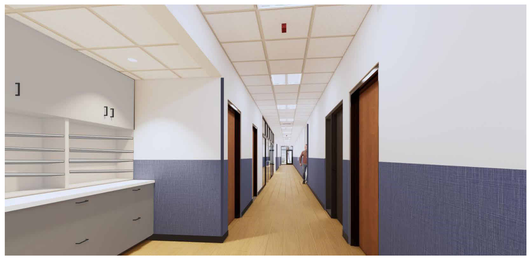

5 CORRIDOR
12" = 1'-0"

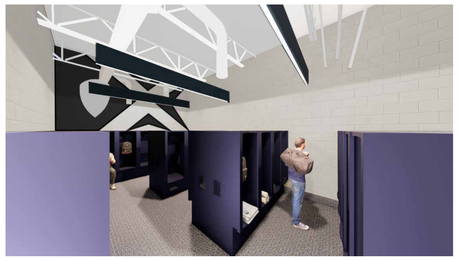

6 MEN'S LOCKERS
12" = 1'-0"

7 PUBLIC LOBBY
12" = 1'-0"

PRINTED: 6/11/2025 11:45:18 AM

NIXA POLICE DEPARTMENT
305 N LEEANN DR
NIXA, MO 65714

INSIGHT DESIGN IDeA ARCHITECTS
112 S. Main St., Nixa, MO 65714 Ph: 417-724-8553

CJD Engineering | Energy | Innovation
olsson
METTEMEYER ENGINEERING LLC

Chiodini ARCHITECTS
Architecture / Interior Design / Graphics
1401 S. Brentwood Blvd. | Suite 575 | St. Louis, Missouri 63144
314-725-5588 | aarc@chiodini.com

Reissue Date

Professional of Record

STATE OF MISSOURI
NATHAN P. RAPP
NUMBER
ARCHITECT

DATE 2025-06-11

Copyright 2025 ©
These prints are the property of the architect and shall be usedonly for the project referenced above

Architect
KM / NPR

Project #
24-003

Date
2025-06-11

Drawing Title:
PERSPECTIVE VIEWS

Sheet:
A900

SPECIAL CONDITIONS, REQUIREMENTS AND NOTES TO OWNER, DEVELOPER AND CONTRACTOR:

1. CONTRACTOR, BUILDER AND SUBCONTRACTORS INVOLVED IN ANY FORM OF CONSTRUCTION USING THESE CONTRACT DOCUMENTS SHALL BE INFORMED OF THE FOLLOWING RESPONSIBILITIES, PERFORMANCE CRITERIA, LIMITATIONS AND RISKS ASSOCIATED WITH CONSTRUCTION. IF THE OWNER, DEVELOPER OR CONTRACTOR IS NOT ABLE TO ACCEPT THE RESPONSIBILITIES OR PERFORMANCE CRITERIA AND LIMITATIONS, NOTIFY THE ENGINEER OF RECORD OR ARCHITECT PRIOR TO START OF CONSTRUCTION. IT SHALL BE EXPRESSLY UNDERSTOOD THAT THE ENGINEER IS NOT RESPONSIBLE OR LIABLE FOR THE LACK OF PERFORMANCE OF MATERIALS, SYSTEMS OR DESIGNS NOT BEING LIMITED TO ITEMS OUTLINED BELOW. CONTRACTORS AND SUBCONTRACTORS SHALL THOROUGHLY REVIEW ALL CONDITIONS AND RESPONSIBILITIES STATED IN THESE NOTES, PLANS, SECTIONS / DETAILS, AND SHALL NOTIFY THE ENGINEER AND OWNER IN WRITING PRIOR TO CONSTRUCTION OF ANY CONDITIONS OR RESPONSIBILITIES WHICH ARE NOT ACCEPTABLE OR NOT UNDERSTOOD.

2. THE CONTRACTOR SHALL USE ALL STANDARD MEANS TO ENSURE PROPER PROTECTION AND CURING OF ALL CEMENTITIOUS MATERIALS TO REDUCE CRACKING OR SURFACE SPALLING. PLAIN CONCRETE, REINFORCED CONCRETE, OR CONCRETE MASONRY DEVELOP CRACKS. THE CRACKS ARE DUE TO INHERENT SHRINKAGE, CREEP AND RESTRAINING EFFECTS. CRACKS ARE NORMALLY COSMETIC AND THE SYSTEM MAINTAINS SERVICEABILITY AND STRENGTH REQUIREMENTS. JOINTS MAY BE INDICATED TO CONTROL CRACKING, BUT ARE NOT MEANT TO ELIMINATE ALL CRACKING, AS THIS IS NOT PRACTICAL. EXTREME CRACKING MAY BE CAUSED BY POOR MATERIAL OR PLACEMENT. CONTACT THE ENGINEER OF RECORD FOR POSSIBLE REPAIR REQUIREMENTS.

3. FOUNDATION SETTLEMENT MAY CAUSE DISTORTION AND DISTRESS TO THE SUPPORTED STRUCTURE AS WELL AS ADJACENT UTILITIES, SLABS, FOUNDATIONS, ETC. THE GEOTECHNICAL REPORT MAY INDICATE A LEVEL OF DISPLACEMENT. ATTENTION TO PROPER SOIL PREPARATION AND GRADING, AS WELL AS PROPER DRAINAGE AWAY FROM STRUCTURE IS ESSENTIAL IN REDUCING EXPECTED SETTLEMENT. ALL REQUIREMENTS WITHIN THE GEOTECHNICAL REPORT ARE TO BE FOLLOWED. INFORM THE ENGINEER OF RECORD OF ANY CONFLICTS BETWEEN THE REPORT AND THE DRAWINGS.

4. VARIATION IN DIMENSIONS MAY OCCUR AS A RESULT OF THERMAL INFLUENCES, NATURAL DEFLECTIONS AND/OR CAMBERS OF MEMBERS. AS A RESULT, QUANTITIES MAY VARY AND ARCHITECTURAL FINISHES MAY BE AT RISK OF COSMETIC VARIATION OR DAMAGE.

5. THE ENGINEER OF RECORD SHALL NOT BE RESPONSIBLE FOR VARIATIONS TO PLANS BETWEEN BID PROCESS AND FINALIZED APPROVED DOCUMENTS RELEASED FOR CONSTRUCTION UNLESS SUCH VARIATIONS ARE ISSUED BY THE ENGINEER. ADDITIONS AND ALTERATIONS MAY BE MADE BY THE ENGINEER BETWEEN RELEASE OF BID DOCUMENTS AND FINALIZED CONSTRUCTION DOCUMENTS.

6. THESE DRAWINGS HAVE BEEN PREPARED USING STANDARDS OF PROFESSIONAL CARE AND COMPLETENESS NORMALLY EXERCISED UNDER SIMILAR CIRCUMSTANCES BY REPUTABLE STRUCTURAL ENGINEERS IN THIS OR SIMILAR LOCALITIES. THEY NECESSARILY ASSUME THAT THE WORK DEPICTED WILL BE PERFORMED BY AN EXPERIENCED CONTRACTOR, SUBCONTRACTOR AND/OR WORKPERSONS WHO HAVE A WORKING KNOWLEDGE OF THE APPLICABLE CODE STANDARDS AND REQUIREMENTS AND OF INDUSTRY ACCEPTED STANDARD GOOD PRACTICE. AS NOT EVERY CONDITION OR ELEMENT IS (OR CAN BE) EXPLICITLY SHOWN ON THESE DRAWINGS. IT IS UNDERSTOOD THAT THE CONTRACTOR WILL USE INDUSTRY ACCEPTED STANDARD GOOD PRACTICE FOR ALL WORK EXPLICITLY SHOWN.

7. CALCULATION AND DESIGN OF MISCELLANEOUS NON-STRUCTURAL ITEMS, SUCH AS RAILINGS, NON-STRUCTURAL WALLS AND PREFABRICATED STRUCTURAL ITEMS, SUCH AS CANOPIES, ARE NOT INCLUDED AND ARE TO BE PROVIDED BY CONTRACTOR UNLESS SPECIFICALLY NOTED ON THESE DRAWINGS.

8. THESE DRAWINGS REPRESENT THE FINISHED STRUCTURE. THEY DO NOT INDICATE THE MEANS AND METHODS OF CONSTRUCTION. THE CONTRACTOR SHALL BE SOLELY RESPONSIBLE FOR CONSTRUCTION MEANS, METHODS, TECHNIQUES, SEQUENCES AND PROCEDURES. IT SHALL BE THE CONTRACTOR'S RESPONSIBILITY TO DESIGN AND PROVIDE ADEQUATE, SHORING, BRACING, FORMWORK, ETC. AS REQUIRED FOR THE PROTECTION OF LIFE AND PROPERTY DURING CONSTRUCTION.

9. CONSTRUCTION MATERIALS SHALL BE UNIFORMLY SPREAD OUT SUCH THAT DESIGN LIVE LOAD PER SQUARE FOOT AS STATED HEREIN IS NOT EXCEEDED. VISITS TO THE SITE BY THE STRUCTURAL ENGINEER SHALL NOT INCLUDE INSPECTION OF THE ABOVE ITEMS.

10. THE CONTRACTOR SHALL BE RESPONSIBLE FOR ALL EXCAVATION PROCEDURES INCLUDING SHORING AND PROTECTION OF ADJACENT PROPERTY, STRUCTURES, STREETS AND UTILITIES IN ACCORDANCE WITH THE LOCAL BUILDING DEPARTMENT AND SHALL COMPLY WITH ALL APPLICABLE BUILDING CODES, REGULATIONS AND SAFETY REQUIREMENTS.

11. THE CONTRACTOR SHALL BE RESPONSIBLE FOR VERIFICATION OF ALL DIMENSIONS, CONDITIONS AND ELEVATIONS WITH OTHER DISCIPLINES DRAWINGS PRIOR TO START OF CONSTRUCTION. THE CONTRACTOR SHALL INFORM THE ARCHITECT AND ENGINEER OF RECORD IN WRITING OF ANY DISCREPANCIES OR OMISSIONS NOTED ON THE DRAWINGS. ANY SUCH DISCREPANCY, OMISSION OR VARIATION NOT REPORTED BEFORE THE START OF CONSTRUCTION SHALL BE THE RESPONSIBILITY OF THE CONTRACTOR.

12. WHERE REFERENCE IS MADE TO VARIOUS TEST STANDARDS FOR MATERIALS, SUCH STANDARDS SHALL BE THE LATEST EDITION AND/OR ADDENDA.

13. OPTIONS ARE FOR CONTRACTOR'S CONVENIENCE. IF AN OPTION IS USED, THE CONTRACTOR SHALL BE RESPONSIBLE FOR ALL NECESSARY CHANGES AND SHALL COORDINATE ALL DETAILS.

14. TYPICAL GENERAL STRUCTURAL NOTES AND DETAILS SHALL APPLY, THOUGH NOT NECESSARILY AT A SPECIFIC LOCATION ON PLANS. WHERE NO DETAILS ARE SHOWN, CONSTRUCTION SHALL CONFORM TO SIMILAR WORK ON THE PROJECT. DETAILS MAY ONLY SHOW ONE SIDE OF CONNECTION OR MAY OMIT INFORMATION FOR CLARITY. WHERE DISCREPANCIES OCCUR IN THESE DRAWINGS, SPECIFIC NOTES AND DETAILS ON DRAWINGS SHALL TAKE PRECEDENCE OVER GENERAL STRUCTURAL NOTES AND TYPICAL DETAILS.

15. ALL OPENINGS ARE NOT SHOWN ON THESE DRAWINGS. ESTABLISH AND VERIFY ALL OPENINGS AND INSERTS FOR ARCHITECTURAL, MECHANICAL, PLUMBING AND ELECTRICAL WITH APPROPRIATE TRADES, DRAWINGS AND SUBCONTRACTORS PRIOR TO CONSTRUCTION. OPENINGS MAY REQUIRE ADDITIONAL REINFORCING OR SUPPORTS AS SHOWN ON TYPICAL DETAILS. IF TYPICAL DETAILS FOR ALL CONDITIONS ARE NOT INCLUDED HEREIN, IT SHALL BE THE RESPONSIBILITY OF THE CONTRACTOR TO REQUEST IN WRITING ADDITIONAL INFORMATION.

16. ALL INSPECTIONS REQUIRED BY THE BUILDING CODES, LOCAL BUILDING OFFICIALS, OR BY THESE PLANS SHALL BE PROVIDED BY AN INDEPENDENT INSPECTION COMPANY OR THE BUILDING DEPARTMENT. SPECIAL INSPECTION REQUIREMENTS STATED HEREIN ARE PARTIAL. COMPLETE INSPECTION REQUIREMENTS SHALL BE AS DIRECTED BY THE LOCAL BUILDING DEPARTMENT. SITE VISITS BY THE ENGINEER DO NOT CONSTITUTE A SPECIAL INSPECTION, UNLESS SPECIFICALLY CONTRACTED FOR.

17. SHOP DRAWINGS SHALL BE SUBMITTED FOR ALL STRUCTURAL ITEMS. SHOP DRAWINGS ARE REVIEWED ONLY FOR GENERAL COMPLIANCE WITH THE STRUCTURAL DRAWINGS. REVIEW DOES NOT INDICATE THAT THE SHOP DRAWINGS ARE CORRECT OR COMPLETE. RESPONSIBILITY FOR CORRECTNESS SHALL REST WITH THE CONTRACTOR. ANY CHANGES, SUBSTITUTIONS, OR DEVIATIONS FROM CONTRACT DRAWINGS SHALL BE CLOUDED. ANY OF THE AFOREMENTIONED SHALL NOT BE CONSIDERED APPROVED AFTER ENGINEER'S REVIEW UNLESS SPECIFICALLY NOTED ACCORDINGLY. THE SHOP DRAWINGS DO NOT SUPERSEDE OR REPLACE THE ORIGINAL CONTRACT DRAWINGS. ANY ENGINEERING PROVIDED BY THE "SPECIALTY ENGINEER" AND SUBMITTED FOR REVIEW SHALL BEAR THE SEAL OF AN APPROPRIATELY REGISTERED ENGINEER. THE ENGINEER OF RECORD SHALL NOT BE RESPONSIBLE FOR THE ADEQUACY OF ENGINEERING DESIGNS PERFORMED BY OTHERS. ALLOW A MINIMUM OF 10 WORKING DAYS FOR THE ENGINEER'S REVIEW. ONE COPY OF EACH SUBMITTAL WILL BE RETAINED FOR THE ENGINEER'S RECORDS.

ELECTRONIC FILES:

ELECTRONIC FILES CREATED BY METTEMEYER ENGINEERING, LLC. ARE AVAILABLE FOR USE BY THE GENERAL CONTRACTOR, SUBCONTRACTORS, OR BUILDERS INVOLVED IN ANY FORM OF CONSTRUCTION AND BIDS ON THE PROJECT BASED ON THE FOLLOWING TERMS AND CONDITIONS:

BY USING THIS COMPUTER-GENERATED DRAWING, YOU WILL INDICATE YOUR ACCEPTANCE OF THE FOLLOWING TERMS AND CONDITIONS. THE PURPOSE OF THIS AGREEMENT IS TO SET FORTH THE CONDITIONS FOR THE USE BY A SECOND PARTY (USER) OF COMPUTER-GENERATED DRAWINGS PREPARED BY METTEMEYER ENGINEERING, LLC. METTEMEYER ENGINEERING, LLC RETAINS OWNERSHIP OF THE INFORMATION CONTAINED ON THE DRAWINGS; PERMISSION TO USE THESE MATERIALS IS GIVEN ONLY SUBJECT TO THE TERMS OF THIS AGREEMENT.

ARTICLE 1. THE INFORMATION RECORDED ON COMPUTER-GENERATED DRAWINGS REPRESENTS A PORTION OF STRUCTURAL ENGINEERING SERVICES PERFORMED BY METTEMEYER ENGINEERING, LLC. NO REPRESENTATION IS MADE BY METTEMEYER ENGINEERING, LLC THAT THE DATA IS WITHOUT INACCURACY. METTEMEYER ENGINEERING, LLC GRANTS PERMISSION TO USE ITS COMPUTER-GENERATED DRAWINGS WITH THIS UNDERSTANDING AND WITH NO LIABILITIES EITHER EXPRESSED OR IMPLIED FOR ACCURACY OR COMPLETENESS. THE USER AGREES TO HOLD HARMLESS AND DEFEND METTEMEYER ENGINEERING, LLC IN THE EVENT OF ANY ACTION AGAINST OR BY THE USER FOR THE PREPARATION OF INFORMATION GENERATED THROUGH THE USE OF COMPUTER-GENERATED DRAWINGS PREPARED BY METTEMEYER ENGINEERING, LLC. FURTHER, IN THE EVENT OF SUCH LEGAL ACTION, THE USER AGREES TO PAY REASONABLE ATTORNEY'S FEES AND EXPENSES INCURRED BY METTEMEYER ENGINEERING, LLC IN RESOLVING THE MATTER.

ARTICLE 2. COMPUTER-GENERATED DRAWINGS ARE MADE AVAILABLE SOLELY FOR THE FACILITATION OF THE USER'S WORK ON THE SPECIFIC PROJECT IDENTIFIED BELOW AND NO PERMISSION IS GRANTED HEREIN FOR COPYING OR REUSE. THE USER'S ACCEPTANCE OF THESE TERMS, WHICH IS COMMUNICATED BY OPENING OR USING THIS DRAWING, CONSTITUTES A WAIVER OF LIABILITY AND THE ACCEPTANCE OF RESPONSIBILITIES FOR THE COORDINATION OF ANY REVISIONS AND COMPUTER-GENERATED INTERLINEATIONS MADE TO THE INFORMATION TRANSMITTED.

ARTICLE 3. UTILIZATION OF COMPUTER-GENERATED DRAWINGS NOT IN ACCORDANCE WITH THE TERMS OF THIS AGREEMENT SHALL CONSTITUTE A BREACH OF THIS AGREEMENT; METTEMEYER ENGINEERING, LLC WILL AT SUCH TIME DEMAND RETURN OF ITS PROPERTY AND MAY SEEK LEGAL RECOURSE AND THE COST OF REASONABLE FEES.

CONFLICTING REQUIREMENTS:

1. ANY AND ALL CONFLICTS WITHIN THE CONTRACT DOCUMENTS (PLANS, SPECIFICATIONS AND OTHER DOCUMENTS); OR BETWEEN THE DOCUMENTS AND EXISTING PROJECT CONDITIONS SHALL BE QUANTIFIED BY THE CONTRACTOR(S); AND ALL ASSOCIATED COSTS MUST BE INCLUDED IN THE CONTRACTOR(S) BASE BID; OR ANY AND/OR ALL COSTS SHALL BE THE SOLE RESPONSIBILITY OF THE CONTRACTOR(S). IT SHALL BE THE SOLE RESPONSIBILITY OF THE CONTRACTOR(S) TO BRING EACH CONFLICT TO THE ATTENTION OF THE ENGINEER OF RECORD. ALL CONFLICTS SHALL BE IDENTIFIED IN WRITTEN FORM AND SUBMITTED THROUGH THE "REQUEST FOR INFORMATION" (RFI) PROCESS DURING BIDDING. THE ENGINEER OF RECORD SHALL REVIEW ALL IDENTIFIED CONFLICTS AND RENDER TO THE CONTRACTOR(S) THEIR DECISION.

2. IF THE CONTRACTOR(S) DO NOT SUBMIT AN RFI AND/OR DO NOT RECEIVE A DIRECTIVE OR CLARIFICATION IN WRITING FROM THE ENGINEER OF RECORD THROUGH NO FAULT OF THEIR OWN, CONTRACTOR SHALL BE REQUIRED TO COMPLY WITH THE MORE STRINGENT STANDARD, OR HIGHER LEVEL OF QUALITY AT NO ADDITIONAL COSTS TO THE OWNER.

3. IF COMPLIANCE WITH TWO OR MORE STANDARDS IS SPECIFIED AND THE STANDARDS ESTABLISHES A DIFFERENT OR CONFLICTING REQUIREMENTS FOR MINIMUM QUANTITIES OR QUALITY LEVELS, COMPLY WITH THE MOST STRINGENT REQUIREMENT.

DEFERRED SUBMITTALS:

1. IN ACCORDANCE WITH THE IBC SECTION 107.3.4.1, SPECIALTY ITEMS, PRE-ENGINEERED COMPONENTS, AND DESIGN/ BUILD ELEMENTS MAY BE SUBMITTED FOR APPROVAL BY THE ENGINEER OF RECORD AND THE BUILDING OFFICIAL BY DEFERRED SUBMITTAL. SUCH ITEMS ARE DEFINED AS THOSE SPECIFIED IN CONSTRUCTION DOCUMENTS BUT WHICH REQUIRE DESIGN BY THE MANUFACTURER, SUPPLIER, OR INSTALLER.

2. SUBMITTALS ARE REQUIRED FOR THE FOLLOWING:

A. STRUCTURAL STEEL CONNECTIONS
B. LIGHT GAGE FRAMING (COLD FORMED STEEL)
C. PRE-ENGINEERED CANOPIES AND SUNSHADES
D. HAND/GUARD RAILS
E. SIGNS ATTACHED TO THE BUILDING
F. REINFORCING STEEL (FOR CONCRETE AND MASONRY)
G. CONCRETE DESIGN MIXES

3. SUBMITTALS SHALL INCLUDE:

A. CALCULATIONS PREPARED AND SEALED BY AN APPROPRIATELY REGISTERED ENGINEER (THE "SPECIALTY ENGINEER").
B. DIAGRAM PREPARED AND SEALED BY THE SPECIALTY ENGINEER, SHOWING LOAD MAGNITUDES AND LOCATIONS - SEPARATED INTO DEAD, LIVE, WIND AND/OR SEISMIC COMPONENTS - THAT ARE APPLIED TO THE PRIMARY STRUCTURE.
C. ERECTION OR DESIGN DRAWINGS BEARING THE SPECIALTY ENGINEER'S SEAL AND THE ARCHITECT'S STAMP INDICATING HIS REVIEW.

4. SUBMIT (1) REPRODUCIBLE COPY, ONE (1) WET SEALED COPY FOR THE STRUCTURAL ENGINEER OF RECORD'S FILE, AND ADDITIONAL COPIES AS ARE NECESSARY FOR THE BUILDING DEPARTMENT. SUBMITTALS CONTAINING EXCEPTIONS, CORRECTIONS, OR OTHER REVIEW COMMENTS ARE NOT ACCEPTABLE FOR SUBMITTAL TO THE BUILDING DEPARTMENT.

5. THE STRUCTURAL ENGINEER OF RECORD'S REVIEW IS STRICTLY LIMITED TO THE FOLLOWING:

A. THE DRAWINGS AND CALCULATIONS ARE PROPERLY SEALED.
B. THE LOAD CRITERIA IS CONSISTENT WITH THE CONTRACT DOCUMENTS AND INTERNATIONAL BUILDING CODE REQUIREMENTS.
C. THE CONNECTIONS TO THE PRIMARY STRUCTURE ARE CONSISTENT WITH THE PRIMARY DESIGN.
D. THE BASE STRUCTURE IS CAPABLE OF SUPPORTING THE IMPOSED LOADS.

6. IF THE LOADS IMPOSED ON THE STRUCTURE EXCEED THE LOAD ALLOWANCE PROVIDED THE STRUCTURAL ENGINEER OF RECORD WILL REJECT THE SUBMITTAL. ONLY AT THE OWNER'S WRITTEN DIRECTION WILL MODIFICATIONS TO THE BASE STRUCTURE TO ACCOMMODATE THE SPECIALTY ITEM(S) BE MADE BY THE ENGINEER OF RECORD. DEFERRED SUBMITTAL ITEMS SHALL NOT BE INSTALLED UNTIL THEIR DESIGN AND THE ENGINEER OF RECORD AND THE BUILDING OFFICIAL HAVE APPROVED SUBMITTAL DOCUMENTS.

HAND/GUARD RAILS:

1. HANDRAIL ASSEMBLIES AND GUARDS SHALL BE DESIGNED TO RESIST A LOAD OF 50 PLF APPLIED IN ANY DIRECTION AT THE TOP AND TO TRANSFER THIS LOAD THROUGH THE SUPPORTS TO THE STRUCTURE.

2. HANDRAIL ASSEMBLIES AND GUARDS SHALL BE ABLE TO RESIST A SINGLE CONCENTRATED LOAD OF 200 POUNDS APPLIED IN ANY DIRECTION AT ANY POINT ALONG THE TOP, AND HAVE ATTACHMENT DEVICES AND SUPPORTING STRUCTURE TO TRANSFER THIS LOADING TO APPROPRIATE STRUCTURAL ELEMENTS OF THE BUILDING. THIS LOAD NEED NOT BE ASSUMED TO ACT CONCURRENTLY WITH THE LOADS SPECIFIED IN THE PRECEDING PARAGRAPH.

3. INTERMEDIATE RAILS (ALL THOSE EXCEPT THE HANDRAIL), BALUSTERS AND PANEL FILLERS SHALL BE DESIGNED TO WITHSTAND A HORIZONTALLY APPLIED NORMAL LOAD OF 50 POUNDS ON AN AREA EQUAL TO 1 SQUARE FOOT, INCLUDING OPENINGS AND SPACE BETWEEN RAILS. REACTIONS DUE TO THIS LOADING ARE NOT REQUIRED TO BE SUPERIMPOSED WITH THOSE ABOVE.

4. WHERE HANDRAILS AND GUARDS ARE DESIGNED IN ACCORDANCE WITH THE PROVISIONS FOR ALLOWABLE STRESS DESIGN (WORKING STRESS DESIGN) EXCLUSIVELY FOR THE LOADS SPECIFIED ABOVE.

5. PROVIDE BLOCKING IN WALLS AT ALL HANDRAIL LOCATIONS.

CONCRETE:

1. MINIMUM 28 DAY STRENGTH (f'c) AS FOLLOWS:

USE TYPE	STRENGTH	ACI EXPOSURE CLASSIFICATIONS			
FOOTINGS	4000 PSI	F0	S0	W0	C0
INTERIOR SLAB ON GROUND	4000 PSI	F0	S0	W0	C0
SITE WALLS/FOUNDATIONS	4500 PSI	F2	S0	W0	C1
EXTERIOR SLAB ON GROUND	5000 PSI	F3	S0	W1	C2
PARKING STRUCTURE FOOTINGS	5000 PSI	F3	S0	W1	C2

2. A MIX DESIGN SHALL BE SUBMITTED FOR REVIEW FOR EACH MIX TYPE AND SHALL INCLUDE ALL MATERIALS TO BE USED, SIEVE ANALYSIS OF AGGREGATE, AND DATA FOR ALL PRODUCTS.

3. AIR ENTRAINMENT AS FOLLOWS:
A. EXTERIOR CONCRETE SHALL BE PER ASTM C260, 6% +- 1.5%
B. INTERIOR CONCRETE SHALL BE LIMITED TO 3% IN ACCORDANCE WITH ACI 302.1R

4. FLY ASH MAY BE USED AT CONTRACTOR'S OPTION. IF USED IT SHALL BE LIMITED TO 20% AND MEET ASTM 618, CLASS C OR F.

5. CONCRETE MIXES SHALL BE DESIGNED BY A CERTIFIED LABORATORY AND APPROVED BY THE ENGINEER ACCORDING TO ACI 301.

6. THE CONCRETE SUPPLIER SHALL STATE THE SLUMP AND ADDITIVES USED IN THE MIX DESIGN.

A. MAXIMUM SLUMP FOR EXTERIOR SLABS SHALL BE 4" +/- 1".
B. MAXIMUM SLUMP FOR ALL OTHER CONCRETE SHALL BE 3" +/- 1".
C. WATER SHALL BE CLEAN AND POTABLE. IF ADDITIONAL FLOWABILITY IS REQUIRED FOR PLACEMENT OF ANY CONCRETE MIX, A WATER-REDUCING ADDITIVE CONFORMING TO ASTM C494, TYPE A OR F, SHALL BE USED. NO ADDITIONAL WATER MAY BE ADDED TO THE MIX. THE ONLY WATER WHICH MAY BE ADDED ONSITE IS MIX WATER THAT HAS BEEN LEFT OUT AT THE BATCH PLANT.
D. CONCRETE DELIVERY TICKET SHALL CLEARLY INDICATE THE AMOUNT OF MIX WATER WHICH HAS BEEN LEFT OUT. MAXIMUM SLUMP SHALL BE 8" FOR CONCRETE WITH VERIFIED SLUMP OF 2" TO 4" BEFORE ADDING HIGH- RANGE WATER-REDUCING ADMIXTURE OR PLASTICIZING ADMIXTURE. SEE DIVISION 3 SPECIFICATIONS FOR ADDITIONAL REQUIREMENTS.

7. PORTLAND CEMENT SHALL CONFORM TO ASTM C 150 TYPE II CEMENT. CALCIUM CHLORIDE IS NOT ALLOWED.

8. NO MORE THAN 90 MINUTES SHALL BELAPSE BETWEEN CONCRETE BATCHING AND CONCRETE PLACEMENT, UNLESS APPROVED BY THE ENGINEER OR AUTHORIZED TESTING AGENCY.

9. CONCRETE MIXING, PLACEMENT AND QUALITY SHALL BE PER IBC SECTION 1904, ASTM C 94, ASTM C 685, AND ACI 302. MECHANICALLY VIBRATE ALL CONCRETE WHEN PLACED, EXCEPT SLABS ON GROUND NEED ONLY BE VIBRATED OR THOROUGHLY RODDED AROUND EMBEDDED STRAPS OR HARDWARE, BOLTS FOR UPLIFT ANCHORS, CURBS AND EDGES OF SLAB STEPS AND UNDER FLOOR DUCTS OR SIMILAR ELEMENTS. REMOVE ALL DEBRIS FROM FORMS BEFORE PLACING CONCRETE.

10. ALL ITEMS THAT ARE CAST INTO CONCRETE SUCH AS REINFORCING, DOWELS, BOLTS, ANCHORS, SLEEVES, EMBEDS, INSERTS, ETC. SHALL BE SECURELY POSITIONED IN THE FORMS BEFORE PLACING THE CONCRETE. SUPPORT ALL REINFORCING WITH CHAIRS AS REQUIRED. FLOATING IN OF THESE ITEMS IS NOT PERMITTED. REINFORCING, DOWELS, EMBEDS, AND INSERTS SHALL BE CLEAN OF RUST, OILS, AND DIRT PRIOR TO CASTING.

11. CONCRETE SLAB ON GROUND CONTROL JOINTS SHALL BE AS SHOWN ON THE FOUNDATION PLAN OR TYPICAL DETAILS. WHERE CONTROL JOINTS ARE NOT SHOWN ON PLANS, ALL CONCRETE SLABS ON GROUND SHALL BE BOUND BY KEYED, DOWELED OR SAWCUT CONTROL JOINTS SUCH THAT THE ENCLOSED AREA DOES NOT EXCEED 144 SQUARE FEET. RATIO OF BOUNDARY DIMENSIONS SHALL NOT EXCEED 1.5:1. LOCATE CONTROL JOINTS OFF OF CORNERS OF DIAMOND ISOLATION LEAVE OUTS AND RE-ENTRANT CORNERS. KEYED OR DOWELED CONSTRUCTION JOINTS NEED ONLY OCCUR AT EXPOSED EDGES DURING POURING. ALL OTHER JOINTS MAY BE SAWCUT. SAWCUT JOINTS SHALL BE CUT IN SLABS ON GROUND AS SOON AS POSSIBLE WITHIN 24 HOURS AFTER SLAB FINISHING AS MAY BE SAFELY DONE WITHOUT DISLODGING AGGREGATE.

12. PIPES OTHER THAN ELECTRICAL CONDUITS SHALL NOT BE EMBEDDED IN STRUCTURAL CONCRETE EXCEPT WHERE SPECIFICALLY APPROVED BY THE ENGINEER. MAXIMUM PIPE SIZE SHALL BE 1/3 OF THE SLAB THICKNESS AND LOCATED AT MID-DEPTH. MINIMUM SPACING SHALL BE 3 TIMES THE OUTSIDE PIPE DIAMETER. PIPES SHALL NOT IMPAIR THE STRENGTH OF THE MEMBER.

13. PROTECT CONCRETE FROM DAMAGE OR REDUCED STRENGTH DUE TO HOT OR COLD WEATHER IN ACCORDANCE WITH ACI 305 AND 306 AND IBC SECTION 1905.
WHERE DOWELS, BOLTS OR INSERTS ARE CALLED TO BE ANCHORED TO CAST IN PLACE CONCRETE ELEMENTS USING EPOXY ADHESIVES, FOLLOW ALL MANUFACTURERS RECOMMENDATIONS. ALTERNATE ANCHORAGE SYSTEMS MAY BE USED WITH ENGINEERS PRIOR APPROVAL.

MISCELLANEOUS STEEL:

1. PROVIDE L5x5x5/16 EDGE ANGLE AT ALL STORM SHELTER LID AND L4x4x1/4 AT ROOF DECK EDGES AND PENETRATIONS, UNLESS NOTED OTHERWISE. PROVIDE A BENT PLATE EDGE ANGLE IF DISTANCE FROM THE EDGE OF DECK TO BEAM/JOIST REQUIRES A LONGER HORIZONTAL LEG OR IF HORIZONTAL AND VERTICAL LEGS OF ANGLE ARE NOT AT 90 DEGREES. MINIMUM THICKNESS OF BENT PLATE ANGLE EQUALS 1/4" AT STORM SHELTER LID AND 3/16" AT ROOF.

2. PROVIDE AN L3-1/2x3-1/2x1/4 "H" FRAME BELOW ALL ROOF MOUNTED MECHANICAL EQUIPMENT INCLUDING ROOF DRAINS, UNLESS NOTED OTHERWISE, FOR JOIST/BEAM SPACING LESS THAN 3'-0". PROVIDE AN L5x3x5/16 (LLV) "H" FRAME BELOW ALL ROOF MOUNTED MECHANICAL EQUIPMENT INCLUDING ROOF DRAINS, UNLESS NOTED OTHERWISE, FOR JOIST/BEAM SPACING OVER 3'-0" AND UP TO 6'-0". ANGLES SUPPORTING MECHANICAL EQUIPMENT SHALL BE WELDED TO THE JOIST/BEAM FLANGES AND WEBS.

3. REFER TO MEP/HVAC DRAWINGS FOR LOCATIONS OF ROOF OR FLOOR MOUNTED MECHANICAL EQUIPMENT. CONTRACTOR SHALL COORDINATE MEP/HVAC UNIT LOCATIONS AND VERIFY CONFORMANCE WITH STRUCTURAL FRAMING PLANS.

4. PROVIDE ALL EMBED PLATES, LEDGERS, LINTELS AND BRACKETS AS REQUIRED FOR A COMPLETE SYSTEM AS OUTLINED IN THE CONTRACT DOCUMENTS.

5. REFER TO STRUCTURAL STEEL NOTES FOR REQUIRED ASTM DESIGNATIONS FOR VARIOUS STEEL SHAPES AND PLATES AS WELL AS FINISHES, CONNECTION INFORMATION AND QUALITY CONTROL.

6. MECHANICAL CONTRACTOR SHALL DESIGN AND SUPPLY ALL FRAMING AS REQUIRED TO SUPPORT OR SUSPENDED EQUIPMENT, DUCTS AND PIPING BETWEEN FRAMING OUTLINED IN THE CONTRACT DOCUMENTS. REFER TO MEP/HVAC DRAWINGS FOR LOCATIONS ANF WEIGHTS OF ITEMS TO BE SUPPORTED OR SUSPENDED.

FOUNDATIONS:

1. GEOTECHNICAL REPORT: <u>CITY OF NIXA, NIXA, MISSOURI 65714</u>

TASK ORDER.: <u>24-003</u>

2. THE OWNER SHALL EMPLOY A GEOTECHNICAL ENGINEER TO PROVIDE SOIL TESTING AND REVIEW DURING CONSTRUCTION. THE GEOTECHNICAL ENGINEER SHALL REVIEW AND APPROVE THE FOUNDATION REQUIREMENTS OF THE CONTRACT DOCUMENTS. IF CONDITIONS VARY FROM THAT INDICATED HEREIN, THEN THE GEOTECHNICAL ENGINEER SHALL NOTIFY THE ARCHITECT AND ENGINEER PRIOR TO FOUNDATION CONSTRUCTION.

3. THE BACKFILL SHALL BE PLACED AND COMPACTED ON EACH SIDE OF FOUNDATION WALLS SUCH THAT NO UNBALANCED LATERAL LOADS ARE INDUCED TO THE WALL. **PROVIDE CLEAN CRUSHED STONE BACKFILL PER GEOTECH REPORT.**

4. BACKFILL SHALL BE PLACED EVENLY AGAINST EACH SIDE OF SUBGRADE STRUCTURAL ELEMENTS TO PRODUCE APPROXIMATELY EQUAL AND OPPOSITE LATERAL PRESSURES.

<u>SLAB ON GRADE SUPPORT:</u>

1. SLAB ON GROUND SUPPORT: MINIMUM 4" LAYER OF GRANULAR BASE CONSISTING OF AN OPEN GRADED CRUSHED STONE (ASTM C33, #57 STONE OR SIMILAR), PER GEOTECHNICAL REPORT. PREPARE SUBGRADE IN ACCORDANCE WITH THE GEOTECH REPORT.

2. UNLESS NOTED OTHERWISE IN THE GEOTECHNICAL REPORT, CONCRETE SLABS ON GROUND SHALL BE SUPPORTED ON SELECT FILL MATERIAL AS NOTED ABOVE. FILL MATERIAL SHOULD BE MOISTENED, BUT NOT SATURATED JUST PRIOR TO PLACING CONCRETE. CARE SHALL BE TAKEN IN PLACING SLABS ON GRADE SO AS NOT TO DISTURB FILL MATERIAL OR REINFORCING. THE FILL MATERIAL SHALL BE COMPACTED TO NO LESS THAN 95% COMPACTION AT MOISTURE CONTENT RANGE OF 3% BELOW TO 3% ABOVE OPTIMUM MOISTURE CONTENT BEFORE PLACEMENT OF SLABS. REFER TO GEOTECHNICAL REPORT FOR ANY ADDITIONAL REQUIREMENTS.

<u>SHALLOW SPREAD FOOTINGS:</u>
1. FROST DEPTH IS <u>24"</u> BELOW GRADE.

2. ALLOWABLE FOOTING BEARING CAPACITY IS <u>2,500</u> PSF

3. ALL FOOTINGS SHALL BEXTEND TO DEPTH NOTED ABOVE UNLESS NOTED OTHERWISE ON PLANS OR DETAIL. GRADE IS DEFINED AS TOP OF SLAB FOR INTERIOR FOOTINGS, AND LOWEST ADJACENT COMPACTED SUBGRADE (PAD GRADE BEFORE LANDSCAPING) OR NATURAL GRADE WITHIN 5 FEET OF BUILDING FOR PERIMETER FOOTINGS. GRADE IS DEFINED AS TOP OF EXTERIOR PAVING OR CONCRETE WHERE EXTERIOR PAVING OR CONCRETE IS PERMANENTLY LOCATED DIRECTLY ADJACENT TO BUILDING AND EXTENDS AT LEAST 5 FEET FROM BUILDING.

4. FOOTING EXCAVATIONS SHALL BE CLEAN AND FREE FROM LOOSE DEBRIS, STANDING WATER, OR UNCOMPACTED MATERIAL AT TIME OF CONCRETE PLACEMENT.

5. EXCAVATION FOR FOOTINGS SHALL BE CUT TO ACCURATE SIZE AND DIMENSIONS AS SHOWN ON PLANS. ALL SOIL BELOW SLABS AND FOOTINGS SHALL BE PROPERLY COMPACTED AND SUBGRADE BROUGHT TO A REASONABLE TRUE AND LEVEL PLANE BEFORE PLACING CONCRETE.

6. SITE PREPARATION AND GRADING REQUIREMENTS OF THE GEOTECHNICAL REPORT AND ANY ADDENDA SHALL BE COMPLETED PRIOR TO CONSTRUCTION OF FOUNDATIONS. ANY TESTS, INSPECTIONS, FIELD OBSERVATIONS, OR APPROVAL FROM THE GEOTECHNICAL ENGINEER SHALL BE PERFORMED PRIOR TO PLACEMENT OF FOUNDATION REINFORCING STEEL OR CONCRETE. ALTERATIONS TO SITE PREPARATION OR GRADING SHALL BE REPORTED TO THE ENGINEER PRIOR TO FOUNDATION CONSTRUCTION.

CONCRETE TESTING SERVICES:

1. TESTING OF COMPOSITE SAMPLES OF FRESH CONCRETE OBTAINED ACCORDING TO ASTM C 172 SHALL BE PERFORMED ACCORDING TO THE FOLLOWING REQUIREMENTS:

A. FREQUENCY: OBTAIN ONE COMPOSITE SAMPLE FOR EACH DAY'S POUR OF EACH CONCRETE MIX EXCEEDING 5 CUBIC YARDS (4 CUBIC METERS), BUT LESS THAN 25 CUBIC YARDS (19 CUBIC METERS), PLUS ONE SET FOR EACH ADDITIONAL 50 CUBIC YARDS (38 CUBIC METERS) OR FRACTION THEREOF. WHEN FREQUENCY OF TESTING WILL PROVIDE FEWER THAN FIVE COMPRESSIVE-STRENGTH TESTS FOR EACH CONCRETE MIX, TESTING SHALL BE CONDUCTED FROM AT LEAST FIVE RANDOMLY SELECTED BATCHES OR FROM EACH BATCH IF FEWER THAN FIVE ARE USED.

B. SLUMP: ASTM C 143; ONE TEST AT POINT OF PLACEMENT FOR EACH COMPOSITE SAMPLE, BUT NOT LESS THAN ONE TEST FOR EACH DAY'S POUR OF EACH CONCRETE MIX. PERFORM ADDITIONAL TESTS WHEN CONCRETE CONSISTENCY APPEARS TO CHANGE.

C. AIR CONTENT: ASTM C 231, PRESSURE METHOD, FOR NORMAL-WEIGHT CONCRETE; ASTM C 173, VOLUMETRIC METHOD, FOR STRUCTURAL LIGHTWEIGHT CONCRETE; ONE TEST FOR EACH COMPOSITE SAMPLE, BUT NOT LESS THAN ONE TEST FOR EACH DAY'S POUR OF EACH CONCRETE MIX.

D. CONCRETE TEMPERATURE: ASTM C 1064; ONE TEST HOURLY WHEN AIR TEMPERATURE IS 40 DEGREES FAHRENHEIT (4.4 DEGREES CELSIUS) AND BELOW AND WHEN 80 DEGREES FAHRENHEIT (27 DEGREES CELSIUS) AND ABOVE, AND ONE TEST FOR EACH COMPOSITE SAMPLE.

E. COMPRESSION TEST SPECIMENS: ASTM C 31/C 31M; CAST AND LABORATORY CURE ONE SET OF FOUR STANDARD CYLINDER SPECIMENS FOR EACH COMPOSITE SAMPLE. FIELD-CURED SPECIMENS BELOW MAY BE REQUIRED TO VERIFY ADEQUACY OF CURING AND PROTECTION OF CONCRETE OR TO VERIFY STRENGTH FOR REMOVAL OF SHORING AND RESHORING IN MULTISTORY CONSTRUCTION.

F. COMPRESSIVE-STRENGTH TESTS: ASTM C 39; TEST TWO LABORATORY-CURED SPECIMENS AT 7 DAYS AND TWO AT 28 DAYS. A COMPRESSIVE-STRENGTH TEST SHALL BE THE AVERAGE COMPRESSIVE STRENGTH FROM TWO SPECIMENS OBTAINED FROM SAME COMPOSITE SAMPLE AND TESTED AT AGE INDICATED. ANY CONCRETE SAMPLING BEYOND THE DAYS ABOVE SHALL BE DIRECTED BY THE CONTRACTOR AT THE CONTRACTOR'S COST.

REINFORCING STEEL (FOR CONCRETE AND MASONRY):

1. REINFORCED CONCRETE IS DESIGNED IN ACCORDANCE WITH THE "BUILDING CODE REQUIREMENTS FOR REINFORCED CONCRETE" (ACI 318) BY THE AMERICAN CONCRETE INSTITUTE.

2. REINFORCING BAR DETAILING, FABRICATING, AND PLACING SHALL CONFORM TO THE "ACI STANDARD: DETAILS AND DETAILING OF CONCRETE REINFORCEMENT" (ACI 315) AND THE "MANUAL OF ENGINEERING AND PLACING DRAWINGS FOR REINFORCED CONCRETE STRUCTURES" (ACI 315R) BY THE AMERICAN CONCRETE INSTITUTE. THE CODE REFERENCED EDITIONS OF CONCRETE REINFORCING STEEL INSTITUTE'S "REINFORCING BAR DETAILING" AND "PLACING REINFORCING BARS" MAY ALSO BE USED.

3. REINFORCING STEEL SHALL CONFORM TO THE REQUIREMENTS OF ASTM A615. REINFORCING SHALL BE GRADE 60 (Fy = 60 KSI) DEFORMED BARS FOR ALL REINFORCING BARS UNLESS NOTED OTHERWISE ON PLANS OR DETAILS. ALL REINFORCING TO BE WELDED SHALL BE ASTM A706 GRADE 60 LOW ALLOY WELDABLE STEEL.

4. WELDED WIRE FABRIC SHALL CONFORM TO THE REQUIREMENTS OF ASTM A185. LAPS IN WELDED WIRE FABRIC SHALL BE MADE SUCH THAT THE OVERLAP, MEASURED BETWEEN OUTERMOST CROSS WIRE OF EACH FABRIC SHEET, IS NOT LESS THAN THE SPACING OF CROSS WIRES PLUS 2 INCHES.

5. ALL DIMENSIONS SHOWING THE LOCATION OF REINFORCING STEEL NOT NOTED AS "CLEAR" OR "CLR" ARE TO CENTER OF STEEL. MINIMUM COVER FOR NON-PRESTRESSED CONCRETE REINFORCING SHALL BE AS FOLLOWS, UNLESS NOTED OTHERWISE ON PLANS OR DETAILS:

EXPOSURE CONDITION	MINIMUM COVER	TOLERANCES (+/-)
CAST AGAINST AND PERMANENTLY EXPOSED TO EARTH	3"	3/8"
EXPOSED TO EARTH OR WEATHER:		
#5 AND SMALLER	1 1/2"	3/8"
#6 AND LARGER	2"	3/8"
SLABS ON GRADE:	1 1/2"	1/4"

6. LAP SPLICES OF REINFORCING STEEL IN ALL CONCRETE SHALL BE ACCORDING TO ACI 318 (CLASS B SPLICE), UNLESS NOTED OTHERWISE. STAGGER SPLICES A MINIMUM OF ONE LAP IN LENGTH. NO TACK WELDING OF REINFORCING BARS IS ALLOWED. CODE REFERENCED ACI CODE AND DETAIL MANUAL APPLY. PROVIDE BENT CORNER BARS TO MATCH AND LAP WITH HORIZONTAL BARS AT ALL CORNERS AND INTERSECTIONS PER TYPICAL DETAILS. VERTICAL WALL BARS SHALL BE SPLICED AT OR NEAR FLOOR LINES. SPLICE TOP BARS AT CENTER LINE OF SPAN AND BOTTOM BARS AT THE SUPPORT IN SPANDRELS, BEAMS, GRADE BEAMS, ETC. UNLESS NOTED OTHERWISE.

7. ALL CONSTRUCTION JOINTS SHOWN ON THE DRAWINGS SHALL BE INCORPORATED IN THE STRUCTURE UNLESS THEIR ELIMINATION IS APPROVED BY THE ENGINEER. ADDITIONAL CONSTRUCTION JOINTS REQUIRED TO FACILITATE CONSTRUCTION SHALL BE LOCATED AND DETAILED ON SHOP DRAWINGS. WHEN CONSTRUCTION JOINTS OTHER THAN THOSE SHOWN ON THE DRAWINGS ARE REQUIRED, THE REINFORCEMENT SHALL PASS CONTINUOUSLY THROUGH THE JOINT AND A KEY SHALL BE PROVIDED FOR ADEQUATE SHEAR TRANSFER.

8. ALL REINFORCING SHALL BE BENT COLD. BARS SHALL NOT BE STRAIGHTENED AND RE-BENT. FIELD BENDING OF REBAR SHALL NOT BE ALLOWED UNLESS SPECIFICALLY NOTED OTHERWISE.

9. WELDING OF REINFORCING BARS, METAL INSERTS, AND CONNECTIONS SHALL CONFORM WITH IBC STANDARD 19-2, AND SHALL BE MADE ONLY AT LOCATIONS SHOWN ON PLANS OR DETAILS.

10. REINFORCING BAR SPACING SHOWN ON PLANS ARE AT MAXIMUM ON CENTERS. ALL BARS SHALL BE DETAILED AND PLACED PER CONCRETE REINFORCING STEEL INSTITUTE (CRSI) SPECIFICATIONS AND HANDBOOK. DOWEL ALL VERTICAL REINFORCING TO FOUNDATION. SECURELY TIE ALL BARS IN LOCATION BEFORE PLACING CONCRETE.

11. AT CORNERS OF FOOTINGS SUPPLY CORNER BARS 4'-0" LONG MINIMUM (2'-0" EACH LEG, OR 30 BAR DIAMETERS).

12. ALL SLABS AND STAIRS NOT SHOWN OTHERWISE SHALL BE 8" THICK AND REINFORCED WITH #4 BARS AT 6" O.C. EACH WAY CENTERED. ALL EXTERIOR PORCHES AND STOOPS NOT OTHERWISE DETAILED MAY BE CONSTRUCTED IN ANY STANDARD MANNER, SOLID OR HOLLOW, BUT MUST BE REINFORCED WITH #4 BARS AT 12" O.C. MINIMUM EACH WAY. PORCHES SHALL BE DOWELED TO ADJACENT WALLS OR GRADE BEAMS WITH #4 BARS AT 12" O.C. HOOKED OR EMBEDDED 30 DIAMETERS INTO BOTH MEMBERS. SLOPE PORCHES 1/8" PER FOOT FOR DRAINAGE UNLESS NOTED OTHERWISE.

13. STANDEES/CHAIRS SHALL BE AS SPECIFIED IN CODE REFERENCED EDITION OF CRSI DESIGN HANDBOOK. MAXIMUM STANDEE/CHAIR SPACING SHALL BE 4'-0" ON CENTER.

14. AT ALL HOLES IN CONCRETE WALLS AND SLABS, ADD 2-#5 BARS (LENGTH IS OPENING DIMENSION PLUS 3'-0" LONG EACH WAY) AT EACH OF FOUR SIDES AND ADD 2-#5x5'-0" DIAGONALLY AT EACH OF THE FOUR CORNERS OF THE HOLE. IN 8" WALL OPENINGS REINFORCE SAME, BUT 1-#5 BAR INSTEAD OF 2-#5 BARS, RESPECTIVELY.
MECHANICAL SPLICE COUPLERS, FLANGE COUPLERS, THREADED COUPLERS, ETC. SHALL HAVE CURRENT ICC APPROVAL AND SHALL BE CAPABLE OF DEVELOPING 125% OF THE STRENGTH OF THE BAR.

EXTERIOR WALL SHEATHING FASTENING REQUIREMENTS:

1. 3/4" THICK, 32/16 APA RATED, EXPOSURE 1 WALL SHEATHING SHALL BE ATTACHED TO METAL STUDS @ 8" O.C. AT EDGES AND INTERMEDIATE SUPPORTS FOR WALL FIELD LOCATIONS. SPACING SHALL BE REDUCED TO 6" O.C. AT EDGES AND INTERMEDIATE SUPPORTS FOR WALL CORNER LOCATIONS. FASTENERS SHALL BE NO. 8 X 1 1/2" FLAT HEAD SCREWS W/ 0.292"Ø MIN. HEAD.

MASONRY (CONCRETE BLOCK):

1. ALL MASONRY OPERATIONS SHALL BE DONE IN ACCORDANCE WITH THE PROVISIONS OF THE ACI 530 AND THE IBC.

2. COMPRESSIVE STRENGTH OF CONCRETE MASONRY CONSTRUCTION, (CMU) SHALL BE AS FOLLOWS (PSI). MASONRY STRENGTH SHALL BE (F'm) 1,500 PSI PSI.

A. MASONRY ASSEMBLY STRENGTH (F'm DESIGN)	2,000 PSI
B. BLOCK STRENGTH	2,000 PSI
C. TYPE M MORTAR STRENGTH	2,500 PSI
D. TYPE S MORTAR STRENGTH	2,000 PSI
E. GROUT STRENGTH	3,000 PSI

3. CONCRETE BLOCK SHALL BE HOLLOW LOAD-BEARING CONCRETE MASONRY UNITS CONFORMING TO ASTM C90, GRADE N-II. ALL BLOCKS SHALL BE PLACED IN RUNNING BOND CONSTRUCTION (UNLESS NOTED OTHERWISE) WITH ALL VERTICAL CELLS IN ALIGNMENT.

4. MORTAR MIX SHALL CONFORM TO REQUIREMENTS OF ACI 530, TYPE M OR S, TYPE S MORTAR SHALL BE USED WHERE MASONRY IS IN CONTACT WITH SOIL.

5. USE SUFFICIENT WATER FOR GROUT TO FLOW INTO ALL CELLS OF THE MASONRY WITHOUT SEGREGATION. ALL CELLS IN CONCRETE BLOCKS CONTAINING REINFORCING SHALL BE FILLED SOLID WITH GROUT. ALL MASONRY CELLS BELOW FINISHED FLOOR OR GRADE SHALL BE GROUTED.

6. INSTALLATION OF GROUT SHALL BE COMPLETED USING A LOW LIFT GROUT PROCEDURE. STOP GROUT 1 1/2" BELOW TOP OF BLOCK AT EACH LIFT.

7. LAP REINFORCING 60 BAR DIAMETERS FOR GRADE 60.

8. MINIMUM WALL VERTICAL REINFORCING, UNLESS NOTED OTHERWISE ON PLANS OR DETAILS, SHALL BE A SINGLE #5 BAR AT 48" O.C. FULL HEIGHT IN CENTER OF GROUTED CELL. PROVIDE REINFORCING AT ALL WALL INTERSECTIONS, CORNERS, WALL ENDS, OPENING JAMBS, AND EACH SIDE OF CONTROL JOINTS. MAXIMUM SPACING SHALL NOT EXCEED 48 INCHES ON CENTER. TIE AT 8'-0" VERTICALLY, AT BOND BEAM LOCATIONS, WITH SINGLE WIRE LOOP TIE OR EQUIVALENT. DOWEL ALL VERTICAL REINFORCING TO FOUNDATION WITH DOWELS TO MATCH AND LAP VERTICAL REINFORCING.

9. MINIMUM WALL HORIZONTAL REINFORCING, UNLESS NOTED OTHERWISE ON PLANS OR DETAILS, SHALL BE A SINGLE #5 BAR IN CENTER OF 8 INCH DEEP CONTINUOUSLY GROUTED BOND BEAMS AT 8'-0" O.C. AND AT TOP OF PARAPETS OR FREE-STANDING WALLS. BOND BEAMS SHALL BE CONTINUOUS THROUGH CONTROL JOINTS. PROVIDE BENT BARS PER TYPICAL DETAILS TO MATCH AND LAP HORIZONTAL BOND BEAM REINFORCING AT CORNERS AND WALL INTERSECTIONS TO MAINTAIN BOND BEAM CONTINUITY.

10. MINIMUM LINTEL ASSEMBLY, UNLESS NOTED OR DETAILED OTHERWISE, SHALL BE 24" DEEP CONSISTING OF TWO COURSES OF 8" DEEP OPEN END CMU OVER 8" DEEP BOND BEAM OR LINTEL BLOCK. REINFORCE WITH (2) #5 IN BOTTOM OF BOND BEAM OR LINTEL BLOCK. GROUT ASSEMBLY SOLID AND EXTEND A MINIMUM OF 2'-0" PAST EACH JAMB.

11. LADDER OR TRUSS TYPE REINFORCING SHALL BE USED AT JOINTS BETWEEN MASONRY UNITS. PROVIDE GALVANIZED 9 GAGE WIRES SPACED AT 16" O.C. AT FACE SHELLS. STOP JOINT REINFORCING EACH SIDE OF VERTICAL CONTROL JOINTS.

12. UNLESS OTHERWISE NOTED ON ARCHITECTURAL DRAWINGS PROVIDE CONTROL / EXPANSION JOINTS AT 24'-0" ON CENTER OR 1.5x HEIGHT, WHICHEVER IS LESS.

POST-INSTALLED ANCHORS:

1. POST-INSTALLED ANCHORS SHALL ONLY BE USED WHERE SPECIFIED ON THE CONSTRUCTION DOCUMENTS OR APPROVED BY E.O.R OR PT DESIGN ENGINEER. SPECIAL INSPECTIONS ARE REQUIRED PER THE PROVISIONS SET FORTH IN BELOW REFERENCED IBC CODE REPORTS. ANCHORS ARE TO BE INSTALLED BY EXPERIENCED INSTALLERS OR CONTRACTOR TO CONTACT MANUFACTURER'S REPRESENTATIVE FOR PROPER PRODUCT INSTALLATION TRAINING ON INITIAL ANCHORS. SUBSTITUTION REQUESTS, FOR PRODUCTS OTHER THAN THOSE SPECIFIED BELOW, SHALL BE SUBMITTED BY THE CONTRACTOR TO THE ENGINEER OF RECORD ALONG WITH CALCULATIONS THAT ARE PREPARED AND SEALED BY A REGISTERED PROFESSIONAL ENGINEER. THE CALCULATIONS SHALL DEMONSTRATE THAT THE SUBSTITUTED PRODUCT IS CAPABLE OF ACHIEVING THE PERTINENT EQUIVALENT PERFORMANCE VALUES (MINIMUM) OF THE SPECIFIED PRODUCT USING THE APPROPRIATE DESIGN PROCEDURE AND/OR STANDARD(S) AS REQUIRED BY THE BUILDING CODE.

2. CONCRETE ANCHORS:

A. MECHANICAL ANCHORS FOR USE IN CRACKED AND UNCRACKED CONCRETE SHALL HAVE BEEN TESTED AND QUALIFIED FOR USE IN ACCORDANCE WITH ACI 355.2 AND ICC-ES AC193. PRE-APPROVED MECHANICAL ANCHORS INCLUDE: SIMPSON STRONG-TIE "TITEN-HD" (ICC-ES ESR-2713), HILTI KWIK HUS-EZ "KH-EZ" (ICC-ES ESR-3027)
B. ADHESIVE ANCHORS FOR USE IN CRACKED AND UNCRACKED CONCRETE SHALL HAVE BEEN TESTED AND QUALIFIED FOR USE IN ACCORDANCE WITH ICC-ES AC308. PRE-APPROVED ADHESIVE ANCHORS INCLUDE: SIMPSON STRONG-TIE "SET-3G" (ICC-ES ESR-2508), HILTI HIT-HY 200-A (ICC-ES ESR 3187)

3. MASONRY ANCHORS (ANCHORAGE TO SOLID-GROUTED CONCRETE MASONRY):

A. MECHANICAL AND CONCRETE SCREW ANCHORS FOR USE IN SOLID-GROUTED CONCRETE MASONRY SHALL HAVE BEEN TESTED AND QUALIFIED FOR USE IN ACCORDANCE WITH ICC-ES AC01 OR AC106, RESPECTIVELY. PRE-APPROVED MECHANICAL AND CONCRETE SCREW ANCHORS INCLUDE: SIMPSON STRONG-TIE "TITEN-HD" (ICC-ES ESR-1056), HILTI "KH-EZ" CRC (ICC-ES ESR-3056)
B. ADHESIVE ANCHORS FOR USE IN SOLID-GROUTED CONCRETE MASONRY SHALL HAVE BEEN TESTED AND QUALIFIED FOR USE IN ACCORDANCE WITH ICC-ES AC58. PRE-APPROVED ADHESIVE ANCHORS INCLUDE: SIMPSON STRONG-TIE "SET-3G" (ICC-ES ESR-1772), HILTI "HIT-HY 200-A (ICC-ES ESR-3963)

COLD FORMED STEEL FRAMING:

1. ALL COLD FORMED STEEL FRAMING SHALL BE FABRICATED AND ERECTED IN ACCORDANCE WITH MANUFACTURER'S RECOMMENDATIONS AND IN ACCORDANCE WITH THE LATEST EDITION OF "SPECIFICATIONS FOR THE DESIGN OF COLD-FORMED STEEL STRUCTURAL MEMBERS" BY THE AMERICAN IRON AND STEEL INSTITUTE.

2. STRUCTURAL DRAWINGS TYPICALLY SHOW ONLY THE PRIMARY STRUCTURAL FRAMING ELEMENTS OF THE SYSTEM. CONTRACTOR SHALL PROVIDE ALL ACCESSORIES INCLUDING TRACKS, WEB STIFFENERS, BLOCKING, LINTELS, CLIP ANGLES, REINFORCEMENTS, FASTENING DEVICES, BRACING, AND OTHER ACCESSORIES AS RECOMMENDED BY THE MANUFACTURER TO PROVIDE A COMPLETE FRAMING SYSTEM.

3. STEEL FOR 10, 12, 14 AND 16 GA. STUDS AND JOISTS SHALL HAVE MINIMUM YIELD STRENGTH OF 50 KSI STEEL FOR ALL 18, 20 AND 25 GA. STUDS AND JOISTS, ALL GAGES OF TRACK, ALL DIAGONAL TENSION STRAPS OR BRACES, AND BRIDGING SHALL HAVE MINIMUM YIELD STRENGTH OF 33 KSI. STEEL SHALL BE GALVANIZED OR THOROUGHLY COATED WITH RUST INHIBITIVE PAINT ALL LOCATIONS.

4. FASTENING OF COMPONENTS SHALL BE WITH SELF-TAPPING SCREWS OR WELDS. ALL WELDS OF GALVANIZED STEEL SHALL BE TOUCHED UP WITH ZINC-RICH PAINT. ALL WELDS OF CARBON SHEET STEEL SHALL BE TOUCHED UP WITH PAINT.

5. ALL STUDS SHALL BE SECURELY SEATED FOR FULL END BEARING ON TOP AND BOTTOM RANK. UNLESS NOTED OTHERWISE, PROVIDE DOUBLE STUDS AT ALL JAMBS, CORNERS, INTERSECTIONS, AND BEAM BEARING.

6. WALL STUD BRIDGING, AS RECOMMENDED BY THE STUD MANUFACTURER, SHALL BE INSTALLED TO PREVENT BOTH WEAK AXIS BENDING AND STUD ROTATION AT 4'-0" MAXIMUM INTERVALS. WALLS 8'-0" AND SHORTER SHALL HAVE A SINGLE ROW OF BRIDGING AT MID-HEIGHT. IN ADDITION, BRIDGING SHALL BE PROVIDED AT ROOF LINES AND ELSEWHERE AS NOTED ON THE DRAWINGS. SOLID BLOCKING SHALL BE INSTALLED IN LIEU OF BRIDGING WHERE NOTED ON THE DRAWINGS.

7. SCREWS SHALL BE SELF TAPPING PAN HEAD, HEX HEAD, OR WAFER HEAD SHEET METAL SCREWS. A SCREW OF A LARGER DIAMETER SHALL REPLACE SCREWS, WHICH ARE REMOVED, WHERE THE REPLACEMENT IS MADE INTO AN EXISTING HOLD. REPLACE ALL SCREWS WHICH STRIP OUT MATERIAL. SCREWS SHALL BE SPACED NO CLOSER THAN 5/8 INCH ON CENTER AND WITH A MINIMUM FREE EDGE OF 1/2". CLIP ANGLES AND FLAT CLIPS USED FOR ATTACHMENTS SHALL BE 20 GA. MINIMUM, UNLESS NOTED OTHERWISE, SIZE CLIP ANGLES AND FLAT CLIPS TO MAINTAIN MINIMUM SCREW SPACING AND EDGE DISTANCES NOTED ABOVE. ALL SCREWS #8 AND LARGER SHALL HAVE A MINIMUM HEAD SIZE OF 5/16 INCH.

8. ALL WELDING SHALL BE PERFORMED BY WELDERS EXPERIENCED IN LIGHT GAGE, STRUCTURAL STEEL FRAMING WORK.

STEEL DECK:

1. DECK SECTION PROPERTIES ARE BASED UPON VULCRAFT'S DECK CATALOG "DESIGNING WITH VULCRAFT STEEL JOISTS AND JOIST GIRDERS STEEL DECK" 3RD EDITION DATED 2019.

2. DECK SHALL BE 3 SPAN MINIMUM AND CAPABLE OF SAFELY SUPPORTING THE LOADING AS INDICATED ON THE DRAWINGS FOR THE SPANS AND SPACING SHOWN. WHERE DECK IS CUT FOR PENETRATIONS PROVIDE SUPPORT ANGLES.

3. DECK SHALL BE INSTALLED IN FULL WIDTH SHEETS, STARTING AT BUILDING PERIMETER. FILLER PIECES SHALL BE INSTALLED ONLY AT LOCATIONS OF MINIMUM SHEAR. ALL SIDE LAP FASTENERS FOR FILLER PIECES SHALL BE SPACED AT 12" O.C. MAXIMUM TO ADJACENT SHEETS.

4. ALL OPENINGS THROUGH DECKING NOT SHOWN ON STRUCTURAL DRAWINGS, SUCH AS THOSE REQUIRED FOR STACKS, CONDUITS, PLUMBING, VENTS, ETC., SHALL BE CUT AND REINFORCED AS REQUIRED BY THE TRADES REQUIRING THE OPENINGS, PER THE SDI SPECIFICATION. MAXIMUM TOLERABLE PENETRATION OR DECK DAMAGE THAT CAN BE SUSTAINED WITHOUT REINFORCEMENT SHALL BE 6" DIAMETER, OR ONE RIB PER SINGLE SHEET. FOR ALL PENETRATIONS BETWEEN 6" TO 13" IN DIAMETER, INSTALLER SHALL PROVIDE A 16 GAGE COVER PLATE WHICH EXTENDS A MINIMUM OF 6" PAST HOLE IN EACH DIRECTION AND IS ATTACHED TO ADJACENT DECKING USING THE TYPICAL FASTENING REQUIREMENTS AROUND OPENINGS THAT HAVE BEEN SPECIFIED.

5. FOR PENETRATIONS THROUGH DECKING GREATER THAN 13" IN DIAMETER PROVIDE A "H" FRAME PER THE MISCELLANEOUS STEEL NOTES AND TYPICAL DETAILS, UNLESS NOTED OTHERWISE.

6. ROOF DECK:

A. STEEL ROOF DECK SHALL BE TYPE B, 1-1/2" DEEP, AND 22 GAGE. DECK SHALL BE PAINTED UNLESS OTHERWISE NOTED.
B. ATTACH DECK TO SUPPORTS WITH ***<u>#12 TEK SCREWS ON A 36/9 PATTERN WITH (7) #10 TEK SCREW</u>*** SIDE LAP FASTENER PER SPAN. PROVIDE A 12" ON CENTER ATTACHMENT SPACING AT THE PERIMETER. CONTRACTOR MAY USE HILTI DECK PINS IN LIEU OF TEK SCREWS AT THEIR OPTION.

7. ELEVATED SLAB ON DECK:

A. COMPOSITE STEEL DECK AND CONCRETE SLAB SHALL BE 5" (TOTAL THICKNESS) NORMAL WEIGHT CONCRETE OVER 2 VLI 20 GA GALVANIZED COMPOSITE DECK. PROVIDE (2) BUTTON PUNCH/CRIMP SIDELAP ATTACHMENTS BETWEEN EACH JOIST. PROVIDE A 5/8" WELD, OR EQUIVALENT ATTACHMENT, ON A 36/4 PATTERN AT END LAPS AND INTERMEDIATE SUPPORTS. END LAPS OCCUR AT SUPPORTS ONLY. REINFORCEMENT: 6x6-W2.1xW2.1 WWF, U.N.O. MAINTAIN 2" COVER FROM TOP OF SLAB AT ALL LOCATIONS.

STEEL JOISTS

1. ALL JOISTS SHALL BE DESIGNED, FABRICATED, WELDED AND ERECTED IN ACCORDANCE WITH THE LATEST EDITION OF THE "STANDARD SPECIFICATIONS" OF THE STEEL JOIST INSTITUTE.

2. JOIST MANUFACTURER SHALL DESIGN AND SUBMIT CALCULATIONS BY AN APPROPRIATELY REGISTERED ENGINEER FOR ALL JOISTS AND JOISTS GIRDERS, EXCEPT PARALLEL CHORD JOIST WITH UNIFORM LOADS AND CONTINUOUSLY SUPPORTED COMPRESSION CHORDS PER SJI STANDARD LOAD TABLES. CALCULATIONS SHALL INCLUDE DEFLECTION AND CAMBER REQUIREMENTS. LIVE LOAD DEFLECTIONS SHALL BE LIMITED TO SPAN/360. ALL JOISTS AND JOIST GIRDERS SHALL BE CAMBERED FOR THE DESIGN DEAD LOAD. MANUFACTURER SHALL ADD ADDITIONAL WEB MEMBERS AS REQUIRED AND ADJUST CHORD AND WEB SIZES ACCORDINGLY, BUT SHALL NOT ALTER DEPTH OF JOISTS WITHOUT APPROVAL OF THE ARCHITECT. DESIGN CALCULATIONS SHALL INCLUDE SUPERIMPOSED LOADS FROM MECHANICAL, ELECTRICAL, PLUMBING, AND OTHER ROOF-SUPPORTED EQUIPMENT. VERIFY SIZE, WEIGHT AND LOCATION OF EQUIPMENT WITH ARCHITECTURAL, MECHANICAL, PLUMBING AND ELECTRICAL DRAWINGS.

3. CONTRACTOR SHALL SUBMIT SHOP DRAWINGS ALONG WITH DESIGN CALCULATIONS SEALED BY A REGISTERED ENGINEER FOR REVIEW PRIOR TO MANUFACTURE. SHOP DRAWINGS AND CALCULATIONS SHALL INCLUDE DETAILS OF ANY OPTIONAL FIELD SPLICES.

4. ALL STEEL JOISTS, GIRDERS OR BEAMS SHALL BEAR AT A PANEL POINT. JOISTS OR BEAMS SHALL BE EQUALLY SPACED BETWEEN COLUMN LINES UNLESS NOTED OTHERWISE ON PLANS. MANUFACTURER SHALL DESIGN JOIST SHOES WHERE BEARING LENGTH IS LESS THAN 4" AT LH SERIES JOIST AND LESS THAN 3" AT K SERIES JOIST.

5. MANUFACTURER SHALL PROVIDE BRIDGING AS REQUIRED PER SJI SPECIFICATIONS. WHERE BOTTOM CHORD WELD IS INDICATED ON DRAWINGS, DO NOT WELD BOTTOM CHORDS TO JOIST SUPPORT UNTIL FULL DEAD LOAD IS IN PLACE. WHERE CROSS BRIDGING INTERFERES WITH MECHANICAL INSTALLATIONS, REMOVE THE INTERFERING CROSS BRIDGING ELEMENTS AFTER TOTAL DEAD LOAD IS APPLIED AND REPLACE WITH EQUIVALENT HORIZONTAL ANGLES (L2"x2"x3/16" MINIMUM) AT TOP AND BOTTOM CHORDS.

6. HORIZONTAL BRIDGING SHOWN ON THE PLANS IS FOR REFERENCE ONLY. JOIST MANUFACTURER SHALL DESIGN AND SUPPLY ALL BRIDGING REQUIRED. THE GROSS WIND UPLIFT IS AS INDICATED ON BASIS OF DESIGN. (THE WEIGHT OF THE BAR JOISTS AND DECK MAY BE SUBTRACTED TO ARRIVE AT THE NETUPLIFT):

7. MANUFACTURER SHALL DESIGN JOIST AND JOIST GIRDERS IN ACCORDANCE WITH THE UNDERWRITER LABORATORY (U.L.) DESIGN REQUIREMENTS IN ORDER TO ACHIEVE THE FIRE RATING SPECIFIED IN ARCHITECTURAL DRAWINGS.

8. THE GENERAL CONTRACTOR SHALL COORDINATE JOIST SPACING WITH FLOOR PENETRATIONS FOR MECHANICAL, ELECTRICAL, PLUMBING OR OTHER ITEMS IN THIS CONTRACT WHICH MAY CONFLICT WITH JOIST SPACING SHOWN. JOIST MAY BE SHIFTED TO MISS REQUIRED REQUIRED PENETRATIONS - ISOLATED SPACING (NO MORE THAN 2 ADJACENT SPACES) MAY BE INCREASED OR DECREASED BY A MAXIMUM OF 6". ANY ADJUSTMENTS MUST BE SHOWN ON BAR JOIST AND METAL DECK SHOP DRAWINGS.

9. WHERE JOIST OCCUR AT COLUMN LINES, EXTEND BOTTOM CHORD TO COLUMN AND PROVIDE A STABILIZER PLATE. DO NOT ATTACH BOTTOM CHORD TO COLUMN.

10. PROVIDE AN L4x4x3/8 "H" FRAME BELOW ALL ROOF MOUNTED MECHANICAL EQUIPMENT INCLUDING ROOF DRAINS, UNLESS NOTED OTHERWISE.

11. PROVIDE 3/8" BEARING PLATES WITH 2-1/2" DIA. x 4" HEADED STUDS AT EACH JOIST BEARING ON CMU WALLS. SIZE PLATES PER JOIST MANUFACTURER RECOMMENDATIONS (4"x6" MINIMUM FOR 1 JOIST, 6"x6" MINIMUM FOR TWO JOISTS) UNLESS NOTED OTHERWISE. SEE SJI STANDARD SPECIFICATION FOR OPEN WEB STEEL JOIST FOR ADDITIONAL RECOMMENDATIONS. CONTINUOUS 1/4"x4" AND 1/4" x 6" PLATES WITH 1/2" DIA.x4" HEADED STUDS AT 16" O.C. MAY BE USED AT SINGLE AND DOUBLE JOISTS RESPECTIVELY AT CONTRACTOR'S OPTION.

12. ALL JOIST SEATS AT THE POTENTIAL DIAPHRAGM BOUNDARIES SHALL HAVE THE CAPACITY TO RESIST A LATERAL LOAD APPLIED AT THE TOP OF THE TOP CHORD, PERPENDICULAR TO THE SPAN, (ROLLOVER) AS FOLLOWS:
a. FOR JOIST SEATS UP TO 3 1/2" DEEP, THE SEAT SHALL BE CAPABLE OF RESISTING A 2,000 LB FORCE. NOTE THAT FOR K-SERIES JOISTS A MINIMUM ANCHORAGE WELD LENGTH OF 1 1/2" SHALL BE USED.
b. FOR JOIST SEATS GREATER THAN 3 1/2" DEEP, THE SEAT SHALL BE CAPABLE OF RESISTING A 1,200 LB FORCE.

STRUCTURAL STEEL:

1. STRUCTURAL STEEL MEMBERS SHALL CONFORM WITH THE FOLLOWING STANDARDS AND MATERIAL PROPERTIES UNLESS NOTED OTHERWISE

SHAPE	STANDARD	Fy
ROLLED WIDE FLANGE SECTIONS	ASTM A992	50 KSI
CHANNELS AND ANGLES	ASTM A36	36 KSI
BARS AND PLATES	ASTM A36	36 KSI
BOLTS AT STEEL CONNECTIONS	ASTM A325 OR A490	----
ANCHOR RODS	ASTM F1554	36 KSI

2. ALL BOLTS SHALL BE INSTALLED AS BEARING-TYPE CONNECTIONS WITH THREADS EXCLUDED FROM SHEAR PLANE (TYPE "X" CONNECTION), UNLESS NOTED OTHERWISE. IF DETAILER PREFERS TYPE N CONNECTIONS CALCUALTIONS NEED TO BE PROVIDED TO THE EOR FOR REVIEW. HIGH-STRENGTH BOLTS SHALL BE TIGHTENED USING ANY AISC APPROVED METHOD. ALL NON-SLIP CRITICAL BOLTS SHALL BE INSTALLED IN SNUG TIGHT CONDITION. TENSION CONTROL BOLTS ARE AN ACCEPTABLE ALTERNATIVE.

3. BOLTS FOR SLIP-CRITICAL CONNECTIONS SHALL BE LOAD INDICATOR BOLTS (LIB) OR SHALL BE EQUIPPED WITH LOAD INDICATOR WASHERS WHICH PROVIDE AN EASY MEANS OF VISUALLY VERIFYING PROPER BOLT TENSION. WHERE LOAD INDICATOR BOLTS CANNOT BE USED DUE TO SPACE RESTRICTIONS OR FOR OTHER REASONS, BOLTS MAY BE TIGHTENED USING THE TURN OF THE NUT METHOD AS OUTLINED IN THE AISC "STEEL CONSTRUCTION MANUAL". NO PAINT SHALL BE APPLIED IN THE REGION OF THE SLIP CRITICAL CONNECTIONS.

4. ALL THREADED ROD AND ALL BOLTED CONNECTIONS INVOLVING WOOD MEMBERS SHALL BE ASTM A-307 UNLESS NOTED OTHERWISE.

5. ALL BOLTS AND WASHERS IN CONTACT WITH TREATED WOOD SHALL BE HOT DIPPED GALVANIZED OR STAINLESS STEEL.

6. ALL STRUCTURAL AND MISCELLANEOUS STEEL SHALL BE FABRICATED AND ERECTED IN ACCORDANCE WITH AISC SPECIFICATIONS FOR THE DESIGN, FABRICATION AND ERECTION OF STRUCTURAL STEEL FOR BUILDINGS, CODE REFERENCED EDITION.

7. WELDING SHALL BE PERFORMED BY WELDERS HOLDING VALID CERTIFICATES AND HAVING CURRENT EXPERIENCE IN THE TYPE OF WELD SHOWN ON THE DRAWINGS. ALL WELDING SHALL USE E70 SERIES LOW HYDROGEN ELECTRODES UNLESS NOTED OTHERWISE. ALL WELDS INVOLVING REINFORCING BARS SHALL USE E90 SERIES ELECTRODES. ALL WELDING SHALL CONFORM TO THE LATEST AMERICAN WELDING SOCIETY (AWS) STANDARDS. WELDS ON DRAWINGS ARE SHOWN AS SHOP WELDS. CONTRACTOR MAY SHOP WELD OR FIELD WELD AT HIS DISCRETION. ALL FULL PENETRATION WELDS SHALL BE TESTED AND CERTIFIED BY AN INDEPENDENT TESTING LABORATORY.

8. DETAILS OUTLINE BASIC CONNECTION TYPES. BEAM TO BEAM AND BEAM TO COLUMN CONNECTIONS NOT DETAILED IN DRAWINGS SHALL BE SIZED BY STEEL DETAILER AS STANDARD AISC, TYPE 2, BEARING CONNECTIONS CAPABLE OF SUPPORTING REACTIONS DEVELOPED BY MAXIMUM UNIFORM LOAD CAPACITY ON A SIMPLE SPAN FOR BEAM AND BEAM SPAN GIVEN. MOMENT FRAME CONNECTIONS INDICATED IN THE PLANS SHALL BE DESIGNED BY THE DEFERRED SUBMITTAL CONNECTION DESIGN ENGINEER IN ACCORDANCE WITH ANSI/AISC 341-16 'SEISMIC PROVISIONS FOR STRUCTURAL STEEL BUILDINGS.

9. STEEL SHALL BE DESIGNED, DETAILED, FABRICATED AND ERECTED ACCORDING TO ALL APPLICABLE SECTIONS OF THE CODE REFERENCED EDITION OF THE AISC MANUAL OF STEEL CONSTRUCTION. SHOP DRAWINGS SHALL BE SUBMITTED INDICATING COMPLETE INFORMATION REQUIRED FOR CONSTRUCTION OF STRUCTURAL STEEL AND SHALL INCLUDE LAYOUT AND DIMENSIONS OF FRAMING PLANS, CONNECTION DETAILS, AND SEQUENCE, ETC. SHOP DRAWINGS AND CALCULATIONS SHALL BE SEALED BY A STRUCTURAL ENGINEER REGISTERED IN THE STATE OF THE PROJECT SITE.

10. HEAVY LOADS THAT EXCEED 75% OF ALLOWABLE LIVE LOADS SHOWN ON THE PLANS, FOR TEMPORARY EQUIPMENT, CONSTRUCTION MATERIALS, OR OTHER LOADS NOT SHOWN IN THE CONTRACT DOCUMENTS, SHALL NOT BE PLACED OR SUPPORTED FROM ELEVATED STRUCTURE WITHOUT PRIOR WRITTEN APPROVAL OF THE STRUCTURAL ENGINEER.

11. INSPECTION OF STRUCTURAL STEEL CONNECTIONS SHALL BE PERFORMED BY A QUALIFIED INSPECTOR RETAINED BY THE CONTRACTOR, APPROVED BY THE ENGINEER AND OWNER. INSPECTOR QUALIFICATION SHALL BE BASED ON COMPLIANCE WITH APPROPRIATE PROVISIONS OF THE AWS CODE- D1.1. INSPECTION SHALL INCLUDE VISUAL INSPECTION OF ALL COMPLETED STRUCTURAL WELDED CONNECTIONS. THE INSPECTING AGENCY SHALL BE NOTIFIED BEFORE ANY WELDING WORK BEGINS AND SHALL BE RESPONSIBLE FOR VERIFICATION OF WELDERS CERTIFICATIONS, INSPECTION OF CONNECTIONS BEFORE WELDING BEGINS, AND INSPECTION DURING WELDING UNTIL THE INSPECTOR IS SATISFIED THAT THE WELDING PROCESS IS BEING PERFORMED PER AWS REQUIREMENTS.

12. FIELD CUTTING, DRILLING OR OTHER MODIFICATION OF STRUCTURAL STEEL COMPONENTS IS NOT PERMITTED WITHOUT WRITTEN APPROVAL OF THE STRUCTURAL ENGINEER. WHERE BEAM PENETRATIONS CANNOT BE AVOIDED OR WHERE CUTTING IS REQUIRED, CONTRACTOR SHALL SUBMIT TO THE ENGINEER, ALL PERTINENT INFORMATION INCLUDING PENETRATION SHAPE, SIZE LOCATION AND METHOD OF CUTTING THE OPENING.
MECHANICAL CONTRACTOR SHALL DESIGN AND SUPPLY ALL FRAMING AS REQUIRED TO SUPPORT OR SUSPEND EQUIPMENT, DUCTS, AND PIPING BETWEEN FRAMING OUTLINED IN HE CONTRACT DOCUMENTS. REFER TO MEP / HVAC DRAWINGS FOR EXACT LOCATIONS AND WEIGHTS OF ITEMS TO BE SUPPORTED OR SUSPENDED AND VERIFY CONFORMANCE WITH STRUCTURAL FRAMING PLANS.

13. FOUNDATION ANCHOR RODS SHALL BE AS CALLED OUT IN THE COLUMN TABLE AND IN BASE PLATE DETAILS, WITH LEVELING NUTS. IF NOT CALLED OUT, USE F1554 3/4" DIAMETER WITH 8" EMBEDMENT AND EMBEDDED NUT.

14. FINISHES ON STRUCTURAL STEEL USED IN AREAS TO RECEIVE SPRAYED ON FIRE PROOFING SHALL BE COMPATIBLE WITH FIREPROOFING MATERIAL. STEEL SHALL BE DELIVERED TO THE SITE CLEAN AND FREE OF LOOSE RUST, SCALE, SLAG AND OIL. PREPARE AND CLEAN SURFACES, AS REQUIRED, BEFORE APPLICATION OF FIREPROOFING MATERIAL. COMPLY WITH FIREPROOFING ASSEMBLY REQUIREMENTS RE: PLANS AND SPECIFICATIONS.

15. ALL HANGERS, CLIPS, INSERTS, ETC. SUSPENDED FROM THE FLOOR STRUCTURE AND THE ROOF STRUCTURE (BEAMS, JOISTS AND DECK) SHALL BE INSTALLED PRIOR TO THE APPLICATION OF THE SPRAYED-ON FIREPROOFING. PATCH ANY FIREPROOFING DAMAGED AFTER THE INITIAL APPLICATION.

16. ALL EXPOSED STEEL SHALL BE GALVANIZED U.N.O., INCLUDING MASONRY SUPPORT LINTELS. RE: DIVISION 5 OF THE SPECIFICATIONS FOR ADDITIONAL REQUIREMENTS.

STEEL LINTELS:

1. LINTELS FOR OPENINGS UP TO 4'-0" WIDE ARE L6x6x3/8 UNLESS NOTED OTHERWISE.

2. PROVIDE 8" OF END BEARING ON EACH SIDE OF THE OPENING FOR ALL LINTELS.

STONE AND BRICK VENEER WITH STEEL STUD OR MASONRY BACKING :

1. VENEER TIES SHALL BE 3/16"Ø WHERE LOOP TIES AND SHOULD EMBED IN VENEER JOINT A MINIMUM OF 1/2 THE WIDTH OF THE VENEER. WIRE SHOULD BE COLD DRAWN STEEL CONFORMING TO ASTM A82. WIRELOOP TIRES SHALL BE ATTACHED TO STEEL STUD BACKING AT EACH STUD AND AT 16" O.C. MAX. VERTICAL SPACING. WIRE LOOP TIES SHALL BE ATTACHED TO STEEL STUDS USING 12 GA.x3/4" WIRE ANCHOR STRAP. ATTACH ANCHOR STRAP TO STUD USING 3/4"x#10 ZINC COATED SCREWS.

2. WIRE LOOP AND ANCHOR STRAPS SHALL BE HOT DIPPED GALVANIZED AND SHALL CONFORM TO ASTM A153. WIRE LOOP TIES SHALL BE ATTACHED TO MASONRY BACKING AT 16" O.C. MAX. VERTICAL AND HORIZONTAL SPACING. WIRE LOOP TIES SHALL BE EMBEDDED IN MASONRY USING 12GA.x3/4" WIRE ANCHOR STRAP WITH A HOOKED OR OTHER APPROVED END. WIRE LOOP AND ANCHOR STRAPS SHALL BE HOT DIPPED GALVANIZED AND SHALL CONFIRM TO ASTM A153.

NIXA POLICE DEPARTMENT

NORTH LEEANN DRIVE
NIXA, MO 65714

INSIGHT DESIGN iDeA ARCHITECTS
112 S. Main St., Nixa, MO
65714 Ph: 417-724-8553

CJD engineering | Energy | Innovation

olsson

METTEMEYER ENGINEERING LLC

Chiodini ARCHITECTS
Architecture / Interior Design / Graphics
1401 S. Brentwood Blvd. / Suite 575 / St. Louis, Missouri 63144
314-725-5588 / arch@chiodini.com

Reissue Date

Professional of Record

STATE OF MISSOURI
ALAN R. METTEMEYER
NUMBER E-2000162147
REGISTERED PROFESSIONAL ENGINEER
6-10-25

DATE

Copyright 2024 ©
These prints are the property of the architect and shall be usedonly for the project referenced above

Engineers & Detailers
BH, DD, LH, MH

Project #
24-0168

Date
06.10.2025

Drawing Title:
GENERAL NOTES

Sheet:
S000

PRINTED: 6/10/2025 1:57:56 PM

BASIS FOR DESIGN:

1. BUILDING CODE IBC 2018
   - RISK CATEGORY IV

2. DEAD LOADS
   A. ROOF .....20 PSF

3. LIVE LOADS
   A. ROOF (NO REDUCTION).....20 PSF

4. SEISMIC LOAD
   A. IMPORTANCE FACTOR, Ie = 1.5
   B. Ss = 0.192
   C. S1 = 0.106
   D. SITE CLASS = D
   E. SDs = 0.205
   F. SD1 = 0.168
   G. SEISMIC DESIGN CATEGORY = D
   H. BASIC SEISMIC FORCE RESISTING SYSTEM = STEEL ORDINARY CONCENTRICALLY BRACED FRAMES
   I. DESIGN BASE SHEAR = 70 KIPS
   J. RESPONSE MODIFICATION COEFFICIENT R = 3.25
   K. SEISMIC RESPONSE COEFFICIENT Cs = 0.0945
   L. ANALYSIS PROCEDURE USED = EQUIV. LATERAL FORCE PROCEDURE

5. SNOW LOAD
   A. GROUND SNOW, Pg = 20 PSF
   B. FLAT ROOF SNOW LOAD, Pf = 16.8 PSF
   C. MINIMUM SNOW LOAD, PMIN = 24 PSF
   D. EXPOSURE FACTOR, Ce = 1.0
   E. IMPORTANCE FACTOR, Is = 1.2
   F. THERMAL FACTOR, Ct = 1.0
   G. RAIN ON SNOW = 5 PSF (FLAT ROOF)
   H. SNOW DRIFT (TO BE CONSIDERED IN ADDITION TO FLAT ROOF SNOW LOAD) = PER PLAN

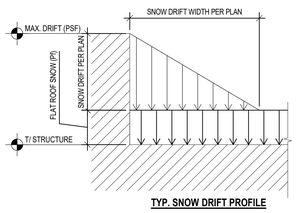

TYP. SNOW DRIFT PROFILE

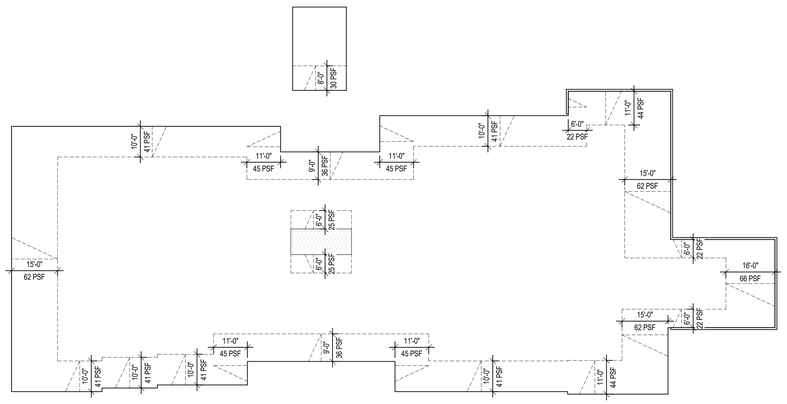

B / S001 BASIS FOR DESIGN - SNOW DRIFT PLAN
Scale: 1" = 20'-0"

6. WIND LOAD
   A. WIND DESIGN PROCEDURE = METHOD 1
   B. BASIC WIND SPEED (3-SECOND GUST)
      a. ULTIMATE DESIGN WIND SPEED.....120 MPH
      b. NOMINAL DESIGN WIND SPEED.....93 MPH
   C. RISK CATEGORY, Iw = 1.0
   D. EXPOSURE = "C"
   E. INTERNAL PRESSURE COEFFICIENT = ±0.18
   F. WIND DESIGN PRESSURES (COMPONENTS & CLADDING) - FLAT ROOF
      LOADS ARE SHOWN AS POUNDS PER SQUARE FOOT

      C&C CORNER ZONE - 10.0'

a. ROOF:	ZONE 1	ZONE 2	ZONE 3
- (100 PSF)	16.0/-45.1	16.0/-60.0	16.0/-71.3
- (50 PSF)	16.0/-48.9	16.0/-64.9	16.0/-81.1
- (20 PSF)	16.0/-53.9	16.0/-71.3	16.0/-94.1
- (10 PSF)	16.0/-57.9	16.0/-76.2	16.0/-103.9

b. WALL:	ZONE 4	ZONE 5
- (100 PSF)	30.8/-33.9	30.8/-37.7
- (50 PSF)	32.5/-35.6	32.5/-41.0
- (20 PSF)	34.6/-37.7	34.6/-45.4
- (10 PSF)	36.3/-39.4	36.3/-48.6

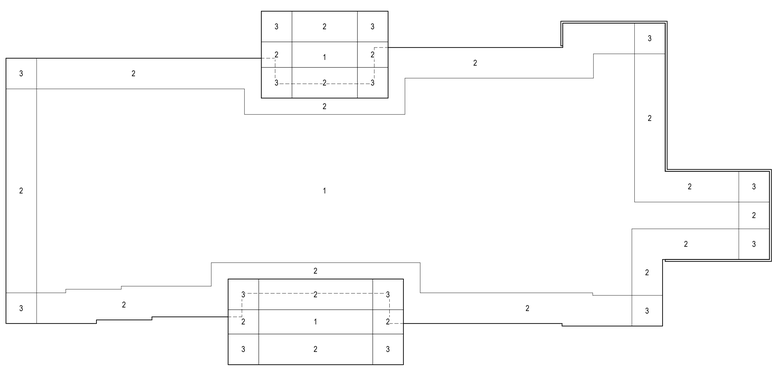

A / S001 BASIS FOR DESIGN - WALL & PARAPET PRESSURES PLAN
Scale: 1" = 20'-0"

STRUCTURAL STEEL

AISC 360

TYPE	CONTINUOUS SPECIAL INSPECTION	PERIODIC SPECIAL INSPECTION
1. MATERIAL VERIFICATION OF HIGH-STRENGTH BOLTS, NUTS, AND WASHERS:		
A. IDENTIFICATION MARKINGS TO CONFORM TO ASTM STANDARDS SPECIFIED IN THE APPROVED CONSTRUCTION DOCUMENTS.	-	X
B. MANUFACTURER'S CERTIFICATE OF COMPLIANCE REQUIRED.	-	X
2. INSPECT OF HIGH-STRENGTH BOLTING:		
A. BEARING-TYPE CONNECTIONS.	-	X
B. SLIP-CRITICAL CONNECTIONS.	X	-
3. MATERIAL VERIFICATION OF STRUCTURAL STEEL:		
A. IDENTIFICATION MARKINGS TO CONFORM TO ASTM STANDARDS SPECIFIED IN THE APPROVED CONSTRUCTION DOCUMENTS.	-	X
B. MANUFACTURER'S CERTIFIED MILL TEST REPORTS.	-	X
4. MATERIAL VERIFICATION OF WELD FILLER MATERIALS:		
A. IDENTIFICATION MARKINGS TO CONFORM TO AWS SPECIFICATION IN THE APPROVED CONSTRUCTION DOCUMENTS.	-	X
B. MANUFACTURER'S CERTIFIED OF COMPLIANCE REQUIRED.	-	X
5. INSPECTION OF STRUCTURAL STEEL WELDING:		
A. COMPLETE AND PARTIAL PENETRATION GROOVE WELDS.	X	-
B. MULTI-PASS FILLET WELDS.	X	-
C. SINGLE-PASS FILLET WELDS > 5/16".	X	-
D. SINGLE-PASS FILLET WELDS < 5/16".	-	X
6. INSPECTION OF STEEL FRAME JOINT DETAILS FOR COMPLIANCE WITH APPROVED CONSTRUCTION DOCUMENTS:		
A. DETAILS SUCH AS BRACING AND STIFFENING.	-	X
B. MEMBER LOCATIONS.	-	X
C. APPLICATION OF JOINT DETAILS AT EACH CONNECTION.	-	X

STEEL CONSTRUCTION

IBC TABLE 1705.2

TYPE	CONTINUOUS SPECIAL INSPECTION	PERIODIC SPECIAL INSPECTION
1. MATERIAL VERIFICATION OF COLD-FORMED STEEL DECK:		
A. IDENTIFICATION MARKINGS TO CONFORM TO ASTM STANDARDS SPECIFIED IN THE APPROVED CONSTRUCTION DOCUMENTS.	-	X
B. MANUFACTURER'S CERTIFICATE TEST REPORTS.	-	X
2. INSPECT OF COLD-FORMED STEEL DECK WELDING:		
A. FLOOR DECK WELDS.	-	X
B. ROOF DECK WELDS.	-	X
3. INSPECTION OF REINFORCING STEEL WELDING:		
A. VERIFICATION OF WELD ABILITY OF REINFORCING STEEL OTHER THAN A706.	-	X
B. REINFORCING STEEL RESISTING FLEXURAL AND AXIAL FORCES IN REINFORCING STEEL RESISTING FLEXURAL AND AXIAL FORCES IN OF SPECIAL REINFORCED CONCRETE SHEAR WALLS AND SHEAR REINFORCEMENT.	X	-
C. SHEAR REINFORCEMENT.	X	-
D. OTHER REINFORCING STEEL.	-	X

CAST-IN-PLACE DEEP FOUNDATION ELEMENTS

IBC TABLE 1705.8

TYPE	CONTINUOUS SPECIAL INSPECTION	PERIODIC SPECIAL INSPECTION
1. INSPECT DRILLING OPERATIONS AND MAINTAIN COMPLETE AND ACCURATE RECORDS FOR EACH ELEMENT.	X	-
2. VERIFY PLACEMENT LOCATIONS AND PLUMBNESS, CONFIRM ELEMENT DIAMETERS, LENGTHS, EMBEDMENT INTO BEDROCK AND ADEQUATE END-BEARING STRATA CAPACITY. RECORD CONCRETE OR GROUT VOLUMES.	X	-
3. FOR CONCRETE ELEMENTS, PERFORM TESTS AND ADDITIONAL SPECIAL INSPECTIONS IN ACCORDANCE WITH SECTION 1705.3.	-	X

STATEMENT OF SPECIAL INSPECTIONS

1. SPECIAL INSPECTIONS ARE REQUIRED FOR THIS PRIMARY BUILDING FRAME / MAIN FORCE RESISTING SYSTEM PER THE LATEST EDITION OF THE IBC.
2. REFER TO THE IBC FOR ADDITIONAL INFORMATION RELATED TO THESE TABLES.
3. INSPECTIONS AND TESTING SHALL BE PROVIDED BY A QUALIFIED TESTING LABORATORY, RETAINED BY THE OWNER AND APPROVED BY THE ENGINEER OF RECORD.
4. REPORTS SHALL INDICATE THAT WORK INSPECTED OR TESTED WAS OR WAS NOT COMPLETED IN CONFORMANCE TO APPROVED CONSTRUCTION DOCUMENTS. DISCREPANCIES SHALL BE BROUGHT TO THE IMMEDIATE ATTENTION OF THE CONTRACTOR FOR COIRRECTION. IF THEY ARE NOT CORRECT, THE DISCREPANCIES SHALL BE BROUGHT TO THE ATTENTION OF THE BUILDING OFFICIAL AND THE ENGINEER OF RECORD PRIOR TO THE COMPLETION OF THAT PHASE OF THE WORK.
5. A LETTER OF SUBSTANTIAL COMPLETION SHALL BE SUBMITTED TO THE BUILDING DEPARTMENT BY THE SPECIAL INSPECTOR PRIOR TO THE FINAL INSPECTION.

SOILS

IBC TABLE 1705.6

TYPE	CONTINUOUS SPECIAL INSPECTION	PERIODIC SPECIAL INSPECTION
1. VERIFY MATERIALS BELOW SHALLOW FOUNDATIONS ARE ADEQUATE TO ACHIEVE THE DESIGN BEARING CAPACITY.	-	X
2. VERIFY EXCAVATIONS ARE EXTENDED TO PROPER DEPTH AND HAVE REACHED PROPER MATERIAL.	-	X
3. PERFORM CLASSIFICATION AND TESTING OF COMPACTED FILL MATERIALS.	-	X
4. VERIFY USE OF PROPER MATERIALS, DENSITIES AND LIFT THICKNESS DURING PLACEMENT AND COMPACTION OF COMPACTED FILL.	X	-
5. PRIOR TO PLACEMENT OF COMPACTED FILL, INSPECT SUBGRADE AND VERIFY THAT SITE HAS BEEN PREPARED PROPERLY.	-	X

CONCRETE CONSTRUCTION

IBC TABLE 1705.3

TYPE	CONTINUOUS SPECIAL INSPECTION	PERIODIC SPECIAL INSPECTION
1. INSPECT REINFORCEMENT AND VERIFY PLACEMENT.	-	X
2. REINFORCING BAR WELDING:		
A. VERIFY WELDABILITY OF REINFORCING BARS OTHER THAN ASTM A706.	-	X
B. INSPECT SINGLE-PASS FILLET WELDS, MAXIMUM 5/16".	-	X
C. INSPECT ALL OTHER WELDS.	X	-
3. INSPECT ANCHORS CAST IN CONCRETE.	-	X
4. INSPECT ANCHORS POST-INSTALLED IN HARDENED CONCRETE MEMBERS:		
A. ADHESIVE ANCHORS INSTALLED IN HORIZONTALLY OR UPWARDLY INCLINED	X	-
B. MECHANICAL ANCHORS AND ADHESIVE ANCHORS NOT DEFINED IN 4.A.	-	X
5. VERIFY USE OF REQUIRED DESIGN MIX.	-	X
6. PRIOR TO CONCRETE PLACEMENT, FABRICATE SPECIMENS FOR STRENGTH TESTS, PERFORM SLUMP AND AIR CONTENT TESTS, AND DETERMINE THE TEMPERATURE OF THE CONCRETE.	X	-
7. INSPECT CONCRETE PLACEMENT FOR PROPER APPLICATION TECHNIQUES.	X	-
8. VERIFY MAINTENANCE OF SPECIFIED CURING TEMPERATURE AND TECHNIQUES.	-	X
9. INSPECT FORMWORK FOR SHAPE, LOCATION AND DIMENSIONS OF THE CONCRETE MEMBER BEING FORMED.	-	X

MASONRY CONSTRUCTION

TMS 402 AND TMS 602 LEVEL "B" QUALITY ASSURANCE

TYPE	CONTINUOUS SPECIAL INSPECTION	PERIODIC SPECIAL INSPECTION
1. MATERIAL TESTING:		
A. VERIFICATION OF SLUMP FLOW AND VISUAL STABILITY INDEX (VSI) AS DELIVERED TO THE PROJECT SITE IN ACCORDANCE WITH ARTICLE 1.5 B.1.b.3 FOR SELF-CONSOLIDATING GROUT.	-	X
B. VERIFICATION OF f'm IN ACCORDANCE WITH ARTICLE 1.4 B PRIOR TO CONSTRUCTION, EXCEPT WHERE SPECIFICALLY EXEMPTED BY THE CODE.	-	X
2. VERIFY COMPLIANCE WITH THE APPROVED SUBMITTALS.	-	X
3. AS MASONRY CONSTRUCTION BEGINS, VERIFY THAT THE FOLLOWING ARE IN COMPLIANCE:		
A. PROPORTIONS OF SITE-PREPARED MORTAR.	-	X
B. CONSTRUCTION OF MORTAR JOINTS.	-	X
C. LOCATION OF REINFORCEMENT AND CONNECTORS.	-	X
4. PRIOR TO GROUTING, VERIFY THAT THE FOLLOWING ARE IN COMPLIANCE:		
A. GROUT SPACING.	-	X
B. GRADE, TYPE, AND SIZE OF REINFORCEMENT AND ANCHOR BOLTS, AND PRESTRESSING TENDONS AND ANCHORAGE.	-	X
C. PLACEMENT OF REINFORCEMENT AND CONNECTORS.	-	X
D. PROPORTIONS OF SITE-PREPARED GROUT.	-	X
E. CONSTRUCTION OF MORTAR JOINTS.	-	X
5. VERIFY DURING CONSTRUCTION:		
A. SIZE AND LOCATION OF STRUCTURAL ELEMENTS.	-	X
B. TYPE, SIZE, AND LOCATION OF ANCHORS, INCLUDING OTHER DETAILS OF ANCHORAGE OF MASONRY TO STRUCTURAL MEMBERS, FRAMES, OR OTHER CONSTRUCTION.	-	X
C. WELDING OF REINFORCEMENT.	X	-
D. PREPARATION, CONSTRUCTION, AND PROTECTION OF MASONRY DURING COLD WEATHER OR HOT WEATHER.	-	X
E. PLACEMENT OF GROUT.	X	-
6. OBSERVATION PREPARATION OF GROUT SPECIMENS, MORTAR SPECIMENS, AND/OR PRISMS.	-	X

NIXA POLICE DEPARTMENT
NORTH LEEANN DRIVE
NIXA, MO 65714

INSIGHT DESIGN IDeA ARCHITECTS
112 S. Main St., Nixa, MO 65714 Ph: 417-724-8553
CJD engineering | Energy | Innovation
olsson
METTEMEYER ENGINEERING LLC
Chiodini ARCHITECTS
Architecture / Interior Design / Graphics
1401 S. Brentwood Blvd. / Suite 570 / St. Louis, Missouri 63144
314-725-5080 art@chiodini.com

Reissue Date

Professional of Record

STATE OF MISSOURI
ALAN R. METTEMEYER
NUMBER E-2000102147
6-10-25
PROFESSIONAL ENGINEER

DATE _____

Copyright 2024 ©
These prints are the property of the architect and shall be usedonly for the project referenced above

Engineers & Detailers
BH, DD, LH, MH

Project #
24-0168

Date
06.10.2025

Drawing Title:
SPECIAL INSPECTIONS & BASIS FOR DESIGN

Sheet:
S001

PRINTED: 6/10/2025 1:57:59 PM

PRINTED: 6/10/2025 1:58:04 PM

STRAIGHT DOWEL DEVELOPMENT LENGTHS (INCHES)
Fy = 60,000 PSI

BAR SIZE	TENSION												COMPRESSION		
	OTHER BARS						TOP BARS								
	3000 PSI CONCRETE	4000 PSI CONCRETE	5000 PSI CONCRETE	6000 PSI CONCRETE	7000 PSI CONCRETE	8000 PSI CONCRETE	3000 PSI CONCRETE	4000 PSI CONCRETE	5000 PSI CONCRETE	6000 PSI CONCRETE	7000 PSI CONCRETE	8000 PSI CONCRETE	3000 PSI CONCRETE	4000 PSI CONCRETE	5000 PSI-10,000 PSI CONCRETE
#3	17	15	13	12	12	12	22	19	17	16	14	14	9	8	8
#4	22	19	17	16	15	14	29	25	23	21	19	18	11	10	9
#5	28	24	22	20	18	17	36	31	28	26	24	22	14	12	12
#6	33	29	26	24	22	21	43	37	34	31	28	27	17	15	14
#7	48	42	38	34	32	30	63	54	49	45	41	39	20	17	16
#8	55	48	43	39	36	34	72	62	56	51	47	44	22	19	18
#9	62	54	48	44	41	38	81	70	63	57	53	50	25	22	21
#10	70	61	54	50	46	43	91	79	71	64	60	56	28	25	23
#11	78	67	60	55	51	48	101	87	78	71	66	62	31	27	26
#14	93	81	72	66	61	57	121	105	94	86	79	74	38	33	31
#18	124	108	96	88	81	76	161	140	125	114	106	99	50	43	41

NOTES:
1. TOP BARS ARE HORIZONTAL REINFORCEMENT PLACED SO THAT MORE THAN 12" OF FRESH CONCRETE IS CAST IN THE MEMBER BELOW THE REINFORCEMENT.
2. DEVELOPMENT LENGTHS IN TENSION ARE BASED ON THE FOLLOWING. NOTIFY ENGINEER IF ONE OF THE FOLLOWING CRITERIA IS NOT MET:
A. CLEAR SPACING OF BARS BEING DEVELOPED OR SPLICED IS NOT LESS THAN THE BAR DIAMETER, CLEAR COVER NOT LESS THAN THE BAR DIAMETER, AND STIRRUPS OR TIES THROUGHOUT THE DEVELOPMENT LENGTH NOT LESS THAN THE CODE MINIMUM, OR
B. CLEAR SPACING OF BARS BEING DEVELOPED OR SPLICED NOT LESS THAN 2 TIMES THE BAR DIAMETER AND CLEAR COVER NOT LESS THAN THE BAR DIAMETER.

PAD FOOTING SCHEDULE

PAD FOOTING MARK	WIDTH	LENGTH	THICKNESS	REINFORCEMENT	REMARKS
F3	3'-0"	3'-0"	1'-2"	(6) #5 BARS, 1/2 EACH WAY, TOP (6) #5 BARS, 1/2 EACH WAY, BOTTOM	
F3.5	3'-6"	3'-6"	1'-2"	(8) #5 BARS, 1/2 EACH WAY, TOP (8) #5 BARS, 1/2 EACH WAY, BOTTOM	
F4	4'-0"	4'-0"	1'-2"	(12) #5 BARS, 1/2 EACH WAY, TOP (12) #5 BARS, 1/2 EACH WAY, BOTTOM	
F4.5	4'-6"	4'-6"	1'-2"	(10) #5 BARS, 1/2 EACH WAY, TOP (12) #5 BARS, 1/2 EACH WAY, BOTTOM	
F5	5'-0"	5'-0"	1'-2"	(12) #5 BARS, 1/2 EACH WAY, TOP (12) #5 BARS, 1/2 EACH WAY, BOTTOM	
F6	6'-0"	6'-0"	1'-2"	(12) #5 BARS, 1/2 EACH WAY, TOP (14) #5 BARS, 1/2 EACH WAY, BOTTOM	
F6x9	6'-0"	9'-0"	2'-6"	#8 BARS @ 12" O.C. EACH WAY, TOP #8 BARS @ 12" O.C. EACH WAY, BOTTOM	

INTERIOR LIGHT GAGE WALL STUDS SCHEDULE

MAX WALL HEIGHT	STUD SIZE	STUD SPACING	REQUIRED BLOCKING/BRIDGING
14'-8"	362S137-33	16" O.C.	MANUFACTURER'S STANDARD @ 4'-0" O.C.
15'-4"	362S162-33	16" O.C.	MANUFACTURER'S STANDARD @ 4'-0" O.C.
21'-8"	600S137-33	16" O.C.	MANUFACTURER'S STANDARD @ 4'-0" O.C.
22'-9"	600S162-33	16" O.C.	MANUFACTURER'S STANDARD @ 4'-0" O.C.

NOTES:
1. REFER TO PLANS AND DETAILS FOR EXTERIOR LIGHT GAGE WALL STUD INFORMATION.

EXTERIOR LIGHT GAGE HEADER SCHEDULE

OPENING WIDTH	REDHEADER TYPE	HEADER CLIP	JAMB STUD SIZE
> 4'-0"	600PRO300-33	HDSC-68-PRO	600PRO300-54
4'-0" - 8'-0"	600PRO300-54	HDSC-97-PRO	600PRO300-97

NOTES:
1. FOR EXTERIOR WALL OPENINGS THAT EXCEED THE WIDTH SHOWN IN THIS SCHEDULE, REFER TO THE PLANS AND DETAILS FOR MORE INFORMATION.

NIXA POLICE DEPARTMENT
NORTH LEEANN DRIVE
NIXA, MO 65714

SYMBOL KEY

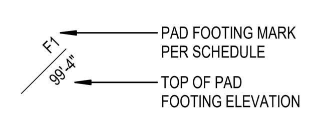

NOTE:
SEE PAD FOOTING SCHEDULE FOR SIZES AND REINFORCEMENT.

LAP SPLICE LENGTHS (INCHES)
Fy = 60,000 PSI

BAR SIZE	TENSION (CLASS B SPLICE)												COMPRESSION
	OTHER BARS						TOP BARS						
	3000 PSI CONCRETE	4000 PSI CONCRETE	5000 PSI CONCRETE	6000 PSI CONCRETE	7000 PSI CONCRETE	8000 PSI CONCRETE	3000 PSI CONCRETE	4000 PSI CONCRETE	5000 PSI CONCRETE	6000 PSI CONCRETE	7000 PSI CONCRETE	8000 PSI CONCRETE	3000 PSI-10,000 PSI CONCRETE
#3	23	20	17	16	15	15	29	25	23	21	19	19	12
#4	29	25	23	21	20	19	38	33	30	28	25	24	15
#5	37	32	29	26	24	23	47	41	37	34	32	29	19
#6	43	38	34	32	29	28	56	49	45	41	37	36	23
#7	63	55	50	45	42	39	82	71	64	59	54	51	27
#8	72	63	56	51	47	45	94	81	73	67	62	58	30
#9	81	71	63	58	54	50	106	91	82	75	69	65	34
#10	91	80	71	65	60	56	119	103	93	84	78	73	39
#11	102	88	78	72	67	63	132	114	102	93	86	81	43
#14	N/A	N/A	N/A	N/A	N/A	N/A	N/A	N/A	N/A	N/A	N/A	N/A	51
#18	N/A	N/A	N/A	N/A	N/A	N/A	N/A	N/A	N/A	N/A	N/A	N/A	68

NOTES:
1. TOP BARS ARE HORIZONTAL REINFORCEMENT PLACED SO THAT MORE THAN 12" OF FRESH CONCRETE IS CAST IN THE MEMBER BELOW THE REINFORCEMENT.
2. DEVELOPMENT LENGTHS IN TENSION ARE BASED ON THE FOLLOWING.
NOTIFY ENGINEER IF ONE OF THE FOLLOWING CRITERIA IS NOT MET:
A. CLEAR SPACING OF BARS BEING DEVELOPED OR SPLICED IS NOT LESS THAN THE BAR DIAMETER, CLEAR COVER NOT LESS THAN THE BAR DIAMETER, AND STIRRUPS OR TIES THROUGHOUT THE DEVELOPMENT LENGTH NOT LESS THAN THE CODE MINIMUM, OR
B. CLEAR SPACING OF BARS BEING DEVELOPED OR SPLICED NOT LESS THAN 2 TIMES THE BAR DIAMETER AND CLEAR COVER NOT LESS THAN THE BAR DIAMETER.

STEEL COLUMN SCHEDULE

COLUMN LOCATION	COLUMN SHAPE	BASE PLATE TYPE	PLATE THICKNESS	PLATE LENGTH	PLATE WIDTH	BOLT DIAM.	ANCHOR BOLT EMBED.	ANCHOR BOLT TYPE	B/STEEL COLUMN ±	T/STEEL COLUMN ±
A(11'-8")-3(8")	HSS5X5X1/4	B	3/4"	12"	12"	3/4"	9"	F1554-G36 T.R.	EL=98'-8"	T/STL=106'-0"
A(-8")-4(-9'-2 1/2")	HSS5X5X5/16	B	3/4"	12"	12"	3/4"	9"	F1554-G36 T.R.	EL=98'-8"	T/STL=106'-0"
A-3	W8X31	E	3/4"	10"	10"	3/4"	9"	F1554-G36 T.R.	EL=98'-8"	T/STL=113'-0" G3
A-5	HSS5X5X1/4	A	3/4"	12"	12"	3/4"	9"	F1554-G36 T.R.	EL=98'-8"	T/STL=113'-8-1/2" G5
A-5.8	HSS5X5X1/4	D	3/4"	12"	16"	3/4"	11"	F1554-G36 T.R.	EL=98'-8"	T/STL=114'-4-1/4" G6
A-6.7	HSS5X5X1/4	A	3/4"	12"	12"	3/4"	9"	F1554-G36 T.R.	EL=98'-8"	T/STL=114'-4-1/4" G6
A-8	HSS5X5X1/4	A	3/4"	12"	12"	3/4"	9"	F1554-G36 T.R.	EL=98'-8"	T/STL=114'-9" G8
A.6-8	HSS5X5X1/2	A	3/4"	12"	12"	3/4"	9"	F1554-G36 T.R.	EL=98'-8"	T/STL=114'-9" G8
B-3	W8X31	E	3/4"	10"	10"	3/4"	9"	F1554-G36 T.R.	EL=98'-8"	T/STL=113'-0" G3
B-5	HSS5X5X1/4	A	3/4"	12"	12"	3/4"	9"	F1554-G36 T.R.	EL=99'-4"	T/STL=113'-8-1/2" G5
B-8	HSS5X5X3/8	A	3/4"	12"	12"	3/4"	9"	F1554-G36 T.R.	EL=98'-8"	T/STL=114'-9" G8
B.3-8	HSS5X5X1/4	A	3/4"	12"	12"	3/4"	9"	F1554-G36 T.R.	EL=98'-8"	T/STL=114'-9" G8
B.6-8	HSS5X5X1/4	D	3/4"	12"	16"	7/8"	11"	F1554-G36 T.R.	EL=98'-8"	T/STL=114'-9" G8
B.7-3	W8X31	E	3/4"	10"	10"	3/4"	9"	F1554-G36 T.R.	EL=98'-8"	T/STL=113'-0" G3
B.7-5	HSS5X5X1/4	A	3/4"	12"	12"	3/4"	9"	F1554-G36 T.R.	EL=99'-4"	T/STL=113'-8-1/2" G5
C(-1'-10")-3(8")	HSS5X5X1/4	B	3/4"	10"	10"	3/4"	9"	F1554-G36 T.R.	EL=98'-8"	T/STL=106'-0"
C-5.8	HSS5X5X1/4	A	3/4"	12"	12"	3/4"	9"	F1554-G36 T.R.	EL=99'-4"	T/STL=114'-2-1/2" G5.8
C-6	HSS5X5X1/4	A	3/4"	12"	12"	3/4"	9"	F1554-G36 T.R.	EL=99'-4"	T/STL=114'-4-1/4" G6
C-7	HSS5X5X1/2	A	3/4"	12"	12"	3/4"	9"	F1554-G36 T.R.	EL=99'-4"	T/STL=120'-9" G7
C-8	HSS5X5X3/8	B	3/4"	12"	12"	3/4"	9"	F1554-G36 T.R.	EL=98'-8"	T/STL=114'-9" G8
C-10	HSS6X6X3/8	C	3/4"	12"	12"	3/4"	9"	F1554-G36 T.R.	EL=98'-8"	T/STL=123'-9"
D-1	HSS5X5X1/2	C	3/4"	12"	12"	3/4"	9"	F1554-G36 T.R.	EL=98'-8"	T/STL=123'-9"
D-4	HSS6X6X1/2	A	3/4"	12"	12"	3/4"	9"	F1554-G36 T.R.	EL=99'-4"	T/STL=120'-9" G7
D-5	HSS5X5X1/4	A	3/4"	12"	12"	3/4"	9"	F1554-G36 T.R.	EL=99'-4"	T/STL=113'-8-1/2" G5
D.1-0.1	HSS6X6X1/4	A	3/4"	12"	12"	3/4"	9"	F1554-G36 T.R.	EL=98'-0"	T/STL=110'-8"
D.1-0.3	HSS6X6X1/4	A	3/4"	12"	12"	3/4"	9"	F1554-G36 T.R.	EL=98'-0"	T/STL=110'-8"
D.1-0.6	HSS6X6X1/4	A	3/4"	12"	12"	3/4"	9"	F1554-G36 T.R.	EL=98'-0"	T/STL=110'-8"
D.1-0.9	HSS6X6X1/4	A	3/4"	12"	12"	3/4"	9"	F1554-G36 T.R.	EL=98'-8"	T/STL=110'-8"
D.2-10	HSS8X8X1/2	B	3/4"	14"	14"	3/4"	9"	F1554-G36 T.R.	EL=98'-8"	T/STL=123'-9"
D.3-5.8	HSS5X5X1/4	A	3/4"	12"	12"	3/4"	9"	F1554-G36 T.R.	EL=99'-4"	T/STL=114'-2-1/2" G5.8
D.3-7	HSS5X5X1/2	A	3/4"	12"	12"	3/4"	9"	F1554-G36 T.R.	EL=99'-4"	T/STL=120'-9" G7
D.4-9.1	HSS4X4X5/16	A	3/4"	10"	10"	3/4"	9"	F1554-G36 T.R.	EL=99'-0"	T/STL=112'-0"
D.4-10(6 1/2")	HSS4X4X5/16	A	3/4"	10"	10"	3/4"	9"	F1554-G36 T.R.	EL=98'-8"	T/STL=112'-0"
D.5-9.1	HSS4X4X5/16	A	3/4"	10"	10"	3/4"	9"	F1554-G36 T.R.	EL=99'-0"	T/STL=112'-0"
D.5-10(6 1/2")	HSS4X4X5/16	A	3/4"	10"	10"	3/4"	9"	F1554-G36 T.R.	EL=98'-8"	T/STL=112'-0"
D.6-7.5	HSS4X4X5/16	A	3/4"	10"	10"	3/4"	9"	F1554-G36 T.R.	EL=99'-0"	T/STL=112'-0"
D.6-9.1	HSS4X4X5/16	A	3/4"	10"	10"	3/4"	9"	F1554-G36 T.R.	EL=99'-0"	T/STL=112'-0"
D.7(1'-7")-1(-6 1/2")	HSS4X4X5/16	A	3/4"	10"	10"	3/4"	9"	F1554-G36 T.R.	EL=98'-8"	T/STL=112'-0"
D.7-0.1	HSS6X6X1/4	A	3/4"	12"	12"	3/4"	9"	F1554-G36 T.R.	EL=98'-0"	T/STL=111'-1"
D.7-0.3	HSS6X6X1/4	A	3/4"	12"	12"	3/4"	9"	F1554-G36 T.R.	EL=98'-0"	T/STL=111'-1"
D.7-0.6	HSS6X6X1/4	A	3/4"	12"	12"	3/4"	9"	F1554-G36 T.R.	EL=98'-0"	T/STL=111'-1"
D.7-0.9	HSS6X6X1/4	A	3/4"	12"	12"	3/4"	9"	F1554-G36 T.R.	EL=98'-8"	T/STL=111'-1"
E(9'-6")-2(8")	HSS5X5X1/4	B	3/4"	12"	12"	3/4"	9"	F1554-G36 T.R.	EL=98'-8"	T/STL=106'-0"
E-1	HSS5X5X1/2	C	3/4"	12"	12"	3/4"	9"	F1554-G36 T.R.	EL=98'-8"	T/STL=123'-9"
E-4	HSS6X6X1/2	A	3/4"	12"	12"	3/4"	9"	F1554-G36 T.R.	EL=99'-4"	T/STL=120'-9" G7
E-5	HSS5X5X1/4	A	3/4"	12"	12"	3/4"	9"	F1554-G36 T.R.	EL=99'-4"	T/STL=113'-8-1/2" G5
F-7	HSS5X5X1/2	A	3/4"	12"	12"	3/4"	9"	F1554-G36 T.R.	EL=99'-4"	T/STL=120'-9" G7
F-8.7	HSS5X5X3/8	B	3/4"	12"	12"	3/4"	9"	F1554-G36 T.R.	EL=98'-8"	T/STL=114'-9 1/2" G9
F-10	HSS6X6X3/8	C	3/4"	12"	12"	3/4"	9"	F1554-G36 T.R.	EL=98'-8"	T/STL=123'-9"
G(-12'-6")-8.7(-8")	HSS5X5X1/4	B	3/4"	12"	12"	3/4"	9"	F1554-G36 T.R.	EL=98'-8"	T/STL=106'-0"
G-2	HSS5X5X1/4	A	3/4"	12"	12"	3/4"	9"	F1554-G36 T.R.	EL=98'-8"	T/STL=112'-11" G2
G-5	HSS5X5X1/4	A	3/4"	12"	12"	3/4"	9"	F1554-G36 T.R.	EL=99'-4"	T/STL=113'-8-1/2" G5
G-8.7	HSS5X5X1/4	A	3/4"	12"	12"	3/4"	9"	F1554-G36 T.R.	EL=98'-8"	T/STL=114'-9 1/2" G9
H(-12'-0")-2(8")	HSS5X5X1/4	B	3/4"	12"	12"	3/4"	9"	F1554-G36 T.R.	EL=98'-8"	T/STL=106'-0"
H(-14'-11")-8.7(-8")	HSS5X5X1/4	B	3/4"	12"	12"	3/4"	9"	F1554-G36 T.R.	EL=98'-8"	T/STL=106'-0"
H-2	HSS5X5X1/4	A	3/4"	12"	12"	3/4"	9"	F1554-G36 T.R.	EL=98'-8"	T/STL=112'-11" G2
H-5	HSS5X5X1/4	B	3/4"	12"	12"	3/4"	9"	F1554-G36 T.R.	EL=99'-4"	T/STL=113'-8-1/2" G5
H.1-9	HSS6X6X1/4	D	3/4"	12"	16"	7/8"	11"	F1554-G36 T.R.	EL=98'-8"	T/STL=114'-9 1/2" G9
J-5	HSS5X5X1/4	B	3/4"	12"	12"	3/4"	9"	F1554-G36 T.R.	EL=98'-8"	T/STL=113'-8-1/2" G5
J-9	HSS5X5X1/4	D	3/4"	12"	16"	7/8"	11"	F1554-G36 T.R.	EL=98'-8"	T/STL=114'-9 1/2" G9

NOTES:
1. ANCHOR BOLT TYPE - A.B. = CAST-IN-PLACE ANCHOR BOLT AND T.R. = EPOXY SET THREADED ROD.
2. EPOXY SET THREADED RODS SHALL BE GR 55, & SET IN HILTI HIT-HY 200 EPOXY, UNLESS NOTED OTHERWISE.
3. TOP AND BOTTOM COLUMN ELEVATIONS SHOWN IN SCHEDULE MUST BE VERIFIED WITH PLANS AND DETAILS.

HOOKED DOWEL DEVELOPMENT LENGTHS IN TENSION (INCHES)
Fy = 60,000 PSI

BAR SIZE	EMBEDMENT						EXTENSION		MINIMUM BEND DIAMETER (IN.)
	3000 PSI CONCRETE	4000 PSI CONCRETE	5000 PSI CONCRETE	6000 PSI CONCRETE	7000 PSI CONCRETE	8000 PSI CONCRETE	90° HOOK	180° HOOK	
#3	6	6	6	6	6	6	5	3	3
#4	8	7	6	6	6	6	6	3	4
#5	10	8	7	7	6	6	8	3	5
#6	12	10	9	8	8	7	9	3	6
#7	13	12	10	9	9	8	11	4	7
#8	15	13	12	11	10	9	12	4	8
#9	17	15	13	12	11	11	14	5	12
#10	19	17	15	14	13	12	16	6	13
#11	22	19	17	15	14	13	17	6	15

NOTES:
1. DEVELOPMENT LENGTH IS BASED ON 2 1/2" MINIMUM SIDE COVER AND 2" MINIMUM END COVER.

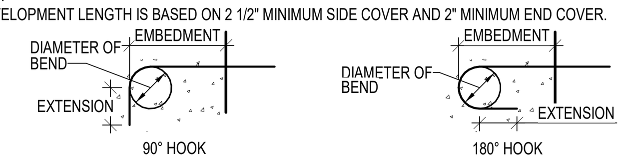

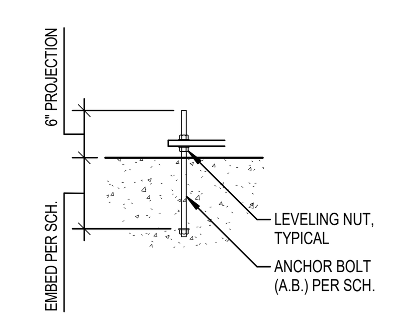

CAST-IN-PLACE ANCHOR BOLTS

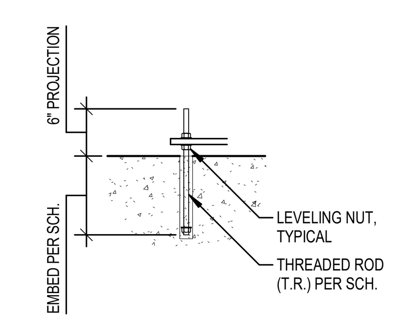

EPOXY SET ANCHOR BOLTS

ABBREVIATIONS:

1. B/ = BOTTOM OF
2. BRG = BEARING
3. CL = CENTER LINE
4. CMU = CONCRETE MASONRY UNIT
5. DBE = DECK BEARING ELEVATION
6. EL = ELEVATION
7. EOR = ENGINEER OF RECORD
8. f'c = CONCRETE COMPRESSIVE STRENGTH
9. FTG = FOOTING
10. FV = FIELD VERIFY
11. G.C. = GENERAL CONTRACTOR
12. H.A.S. = HEADED ANCHOR STUD
13. JBE = JOIST BEARING ELEVATION
14. LT GA = LIGHT GAGE
15. MEP = MECHANICAL, ELECTRICAL, PLUMBING
16. MFR = MANUFACTURER
17. O.C. = ON CENTER
18. P.A.F. = POWDER ACTUATED FASTENER
19. PL = PLATE
20. RTU = ROOF TOP UNIT
21. T/ = TOP OF
22. TYP = TYPICAL
23. U.N.O. = UNLESS NOTED OTHERWISE

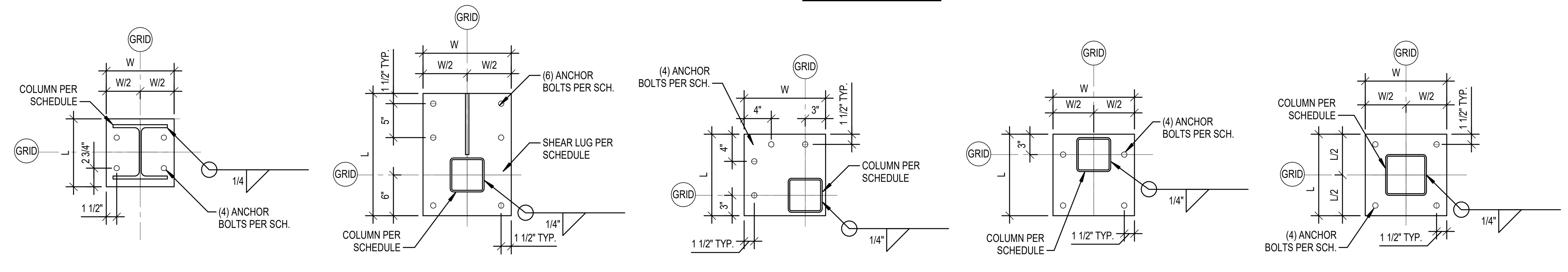

A
S002
BASE PLATE TYPES
Scale: 1" = 1'-0"

112 S. Main St., Nixa, MO 65714 Ph: 417-724-8553

Architecture / Interior Design / Graphics
1401 S. Brentwood Blvd. / Suite 575 / St. Louis, Missouri 63144
314-725-5588 / arch@chiodini.com

Reissue Date

Professional of Record

STATE OF MISSOURI
ALAN R. METTEMEYER
NUMBER E-2000162147
6-10-25
REGISTERED PROFESSIONAL ENGINEER

DATE

Copyright 2024 ©
These prints are the property of the architect and shall be usedonly for the project referenced above

Engineers & Detailers
BH, DD, LH, MH

Project #
24-0168

Date
06.10.2025

Drawing Title:
SCHEDULES

Sheet:
S002

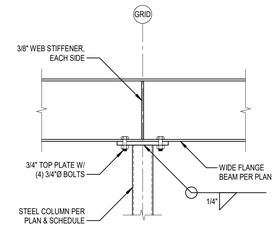

X S003 BEAM OVER COLUMN CONNECTION (TYPICAL)
Scale: 1" = 1'-0"

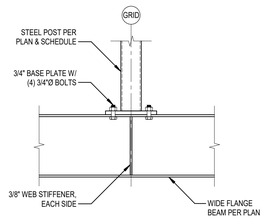

W S003 COLUMN OVER BEAM CONNECTION (TYPICAL)
Scale: 1" = 1'-0"

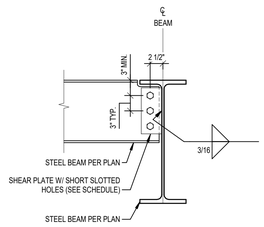

SHEAR PLATE SCHEDULE		
BEAM SHAPE	SHEAR PL THICKNESS	NUMBER OF BOLTS (n)
W8	3/8"	2
W10	3/8"	2
W12	3/8"	3
W14	3/8"	3
W16	3/8"	4
W18	3/8"	4
W21	3/8"	5
W24	3/8"	6

V S003 W-JOIST TO BEAM SHEAR CONNECTION (TYPICAL)
Scale: 1" = 1'-0"

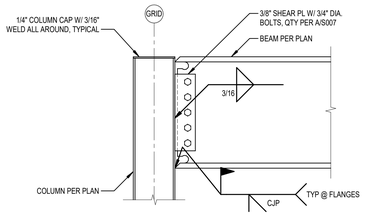

U S003 WELDED MOMENT CONNECTION @ W-COLUMN (TYPICAL)
Scale: 1" = 1'-0"

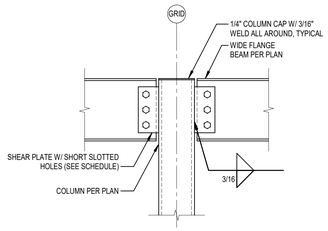

SHEAR PLATE SCHEDULE		
BEAM SHAPE	SHEAR PL THICKNESS	NUMBER OF BOLTS (n)
W8	3/8"	2
W10	3/8"	2
W12	3/8"	3
W14	3/8"	3
W16	3/8"	4
W18	3/8"	4
W21	3/8"	5
W24	3/8"	6

T S003 BEAM TO COLUMN SHEAR CONNECTION (TYPICAL)
Scale: 1" = 1'-0"

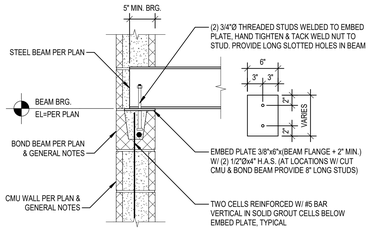

S S003 W-BEAM BEARING @ CMU WALL (TYPICAL)
Scale: 1" = 1'-0"

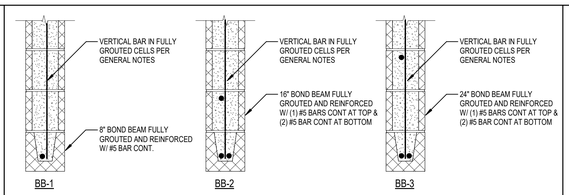

R S003 CMU WALL BOND BEAM TYPES (TYPICAL)
Scale: 1" = 1'-0"

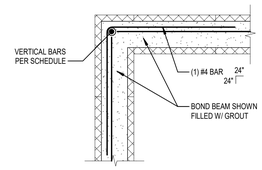

Q S003 CMU BOND BEAM CORNERS, TYP. (PLAN VIEW)
Scale: 1" = 1'-0"

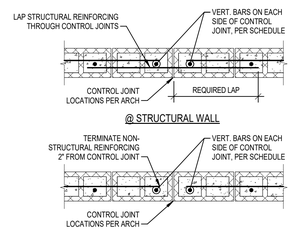

P S003 CMU WALL CONTROL JOINT, TYP. (PLAN VIEW)
Scale: 3/4" = 1'-0"

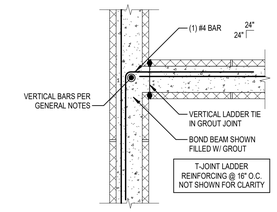

N S003 CMU WALL @ INTERSECTION, TYP. (PLAN VIEW)
Scale: 1" = 1'-0"

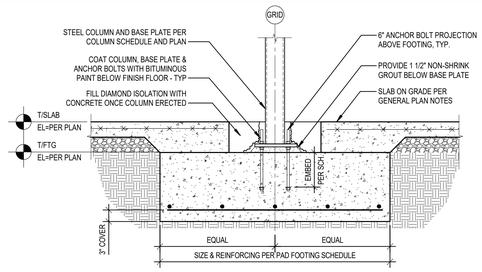

M S003 INTERIOR STEEL COLUMN FOUNDATION (TYPICAL)
Scale: 3/4" = 1'-0"

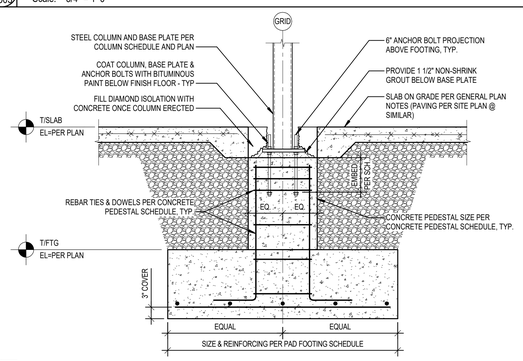

L S003 STEEL COLUMN PEDESTAL FOUNDATION, TYP.
Scale: 3/4" = 1'-0"

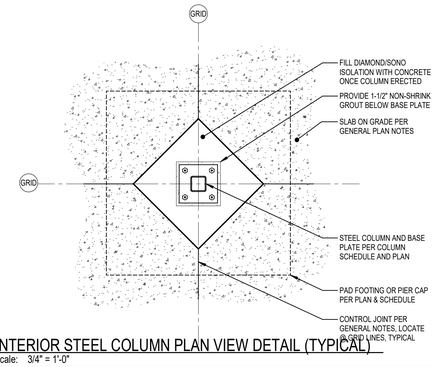

K S003 INTERIOR STEEL COLUMN PLAN VIEW DETAIL (TYPICAL)
Scale: 3/4" = 1'-0"

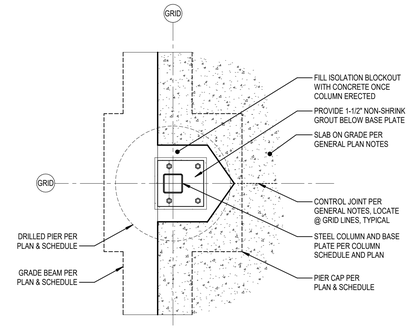

J S003 EXTERIOR STEEL COLUMN PLAN VIEW DETAIL (TYPICAL)
Scale: 3/4" = 1'-0"

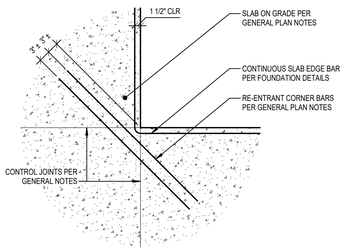

H S003 TYPICAL RE-ENTRANT CORNER BARS
Scale: 3/4" = 1'-0"

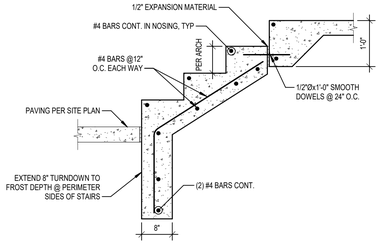

G S003 TYPICAL STAIRS ON GRADE
Scale: 3/4" = 1'-0"

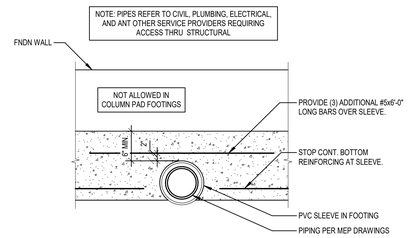

F S003 TYPICAL PIPE PENETRATION @ FOUNDATION
Scale: 3/4" = 1'-0"

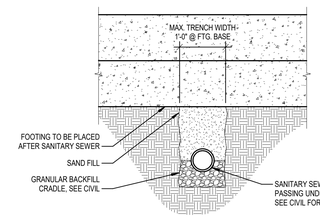

E S003 TYPICAL PIPE BELOW FOUNDATION
Scale: 3/4" = 1'-0"

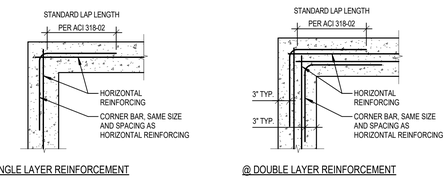

D S003 CORNER BARS (TYPICAL)
Scale: 3/4" = 1'-0"

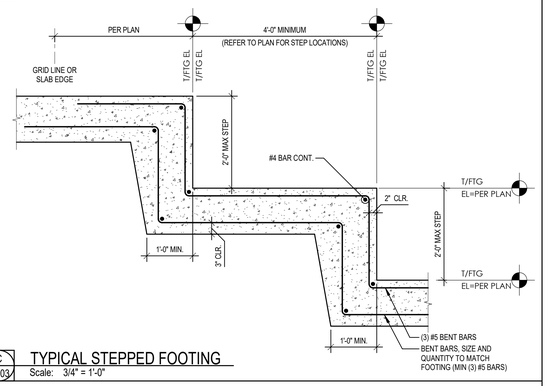

C S003 TYPICAL STEPPED FOOTING
Scale: 3/4" = 1'-0"

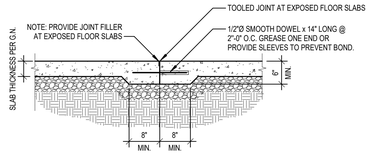

B S003 CONSTRUCTION JOINT (TYPICAL)
Scale: 3/4" = 1'-0"

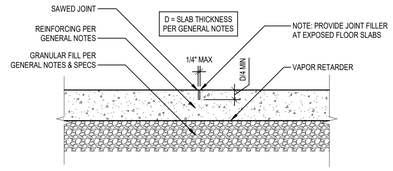

A S003 CONTROL JOINT (TYPICAL)
Scale: 1 1/2" = 1'-0"

NIXA POLICE DEPARTMENT

NORTH LEEANN DRIVE
NIXA, MO 65714

INSIGHT DESIGN IDeA ARCHITECTS
112 S. Main St., Nixa, MO 65714 Ph: 417-724-8553

CJD engineering | Energy | Innovation

olsson

METTEMEYER ENGINEERING LLC

Christini ARCHITECTS
Architecture / Interior Design / Graphics
1401 S. Brentwood Blvd. | Suite 975 | St. Louis, Missouri 63144
314-726-5888 aarch@christini.com

Reissue Date

Professional of Record

STATE OF MISSOURI
ALAN R. METTEMEYER
NUMBER E-2000162147
6-10-25
PROFESSIONAL ENGINEER

DATE _____

Copyright 2024 ©
These prints are the property of the architect and shall be usedonly for the project referenced above

Engineers & Detailers
BH, DD, LH, MH

Project #
24-0168

Date
06.10.2025

Drawing Title:
TYPICAL DETAILS

Sheet:
S003

PRINTED: 6/10/2025 1:58:08 PM

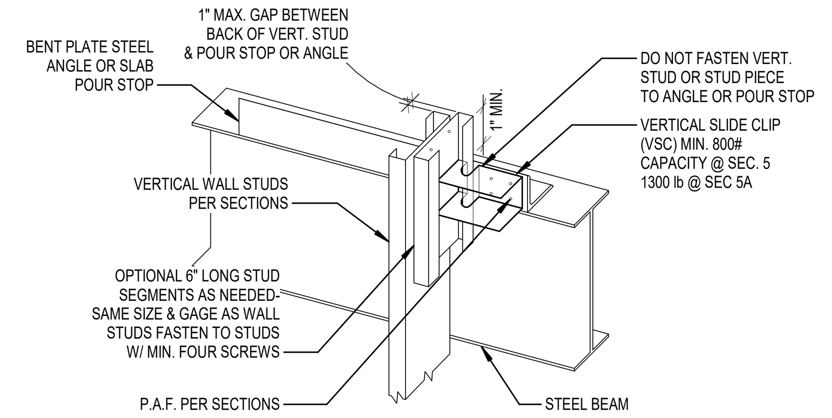

V / S004 — TYP. VERTICAL SLIP CONNECTION
Scale: 1" = 1'-0"

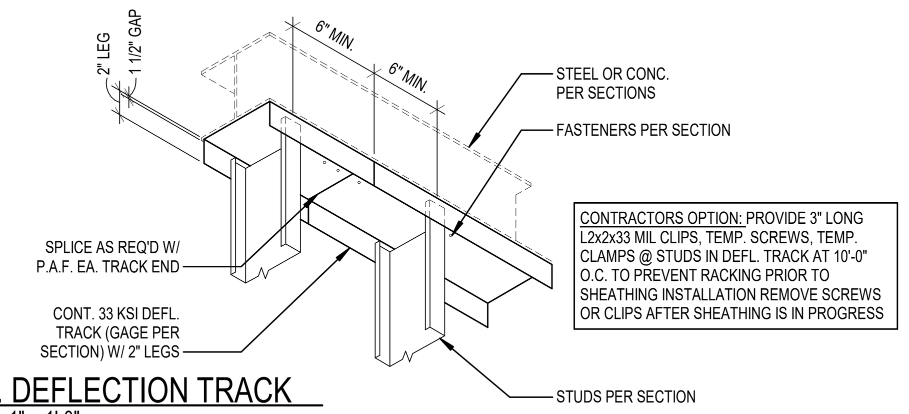

U / S004 — TYP. DEFLECTION TRACK
Scale: 1" = 1'-0"

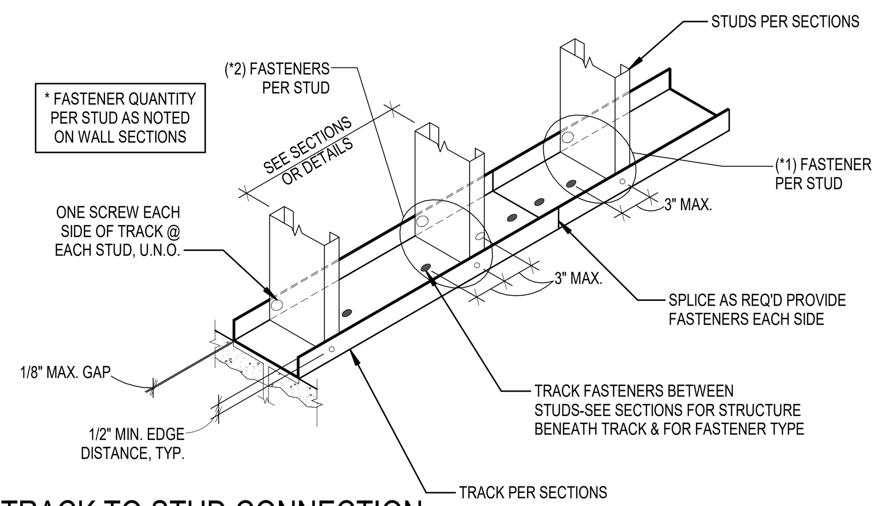

T / S004 — TYP. TRACK TO STUD CONNECTION
Scale: 1" = 1'-0"

NOTES:
1. LIGHT GAGE ERECTOR SHALL SELECT ONE BRIDGING OPTION. ONLY ONE OPTION SHALL BE USED FOR EACH AREA OF FRAMING.
2. PROVIDE BRIDGING AT ALL STUDS AT 5'-0" O.C. MAX.

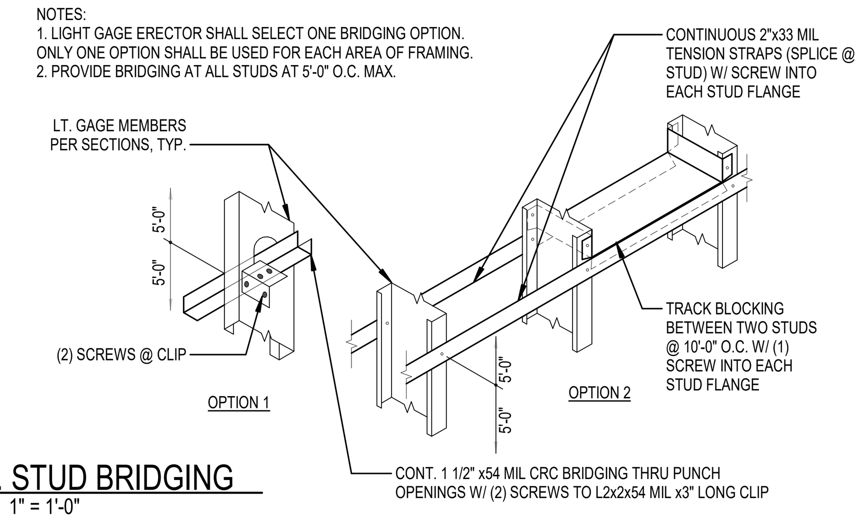

S / S004 — TYP. STUD BRIDGING
Scale: 1" = 1'-0"

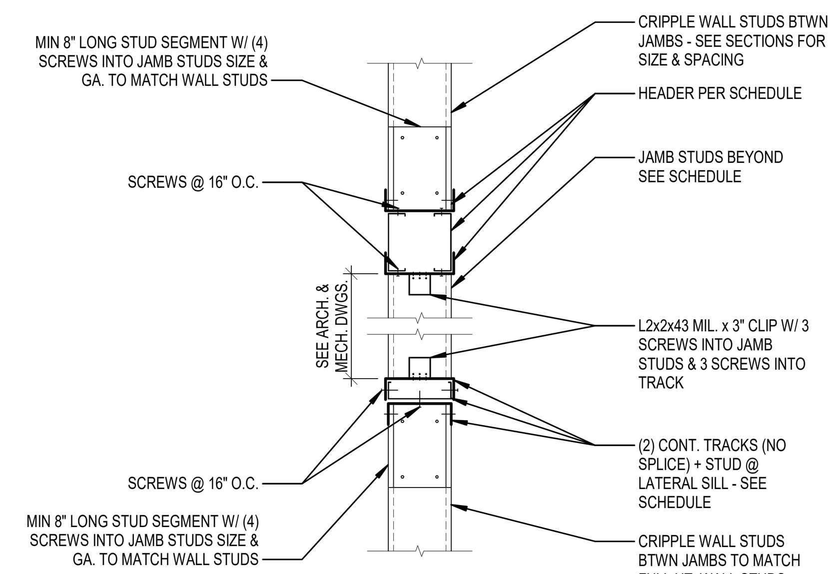

R / S004 — TYP. OPENING SECTION
Scale: 1" = 1'-0"

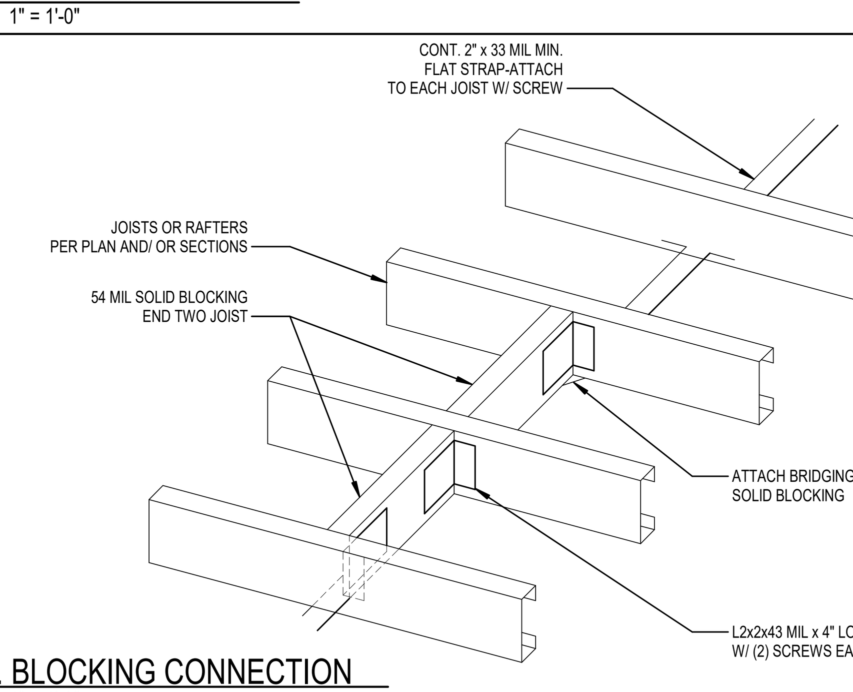

Q / S004 — TYP. BLOCKING CONNECTION
Scale: 1" = 1'-0"

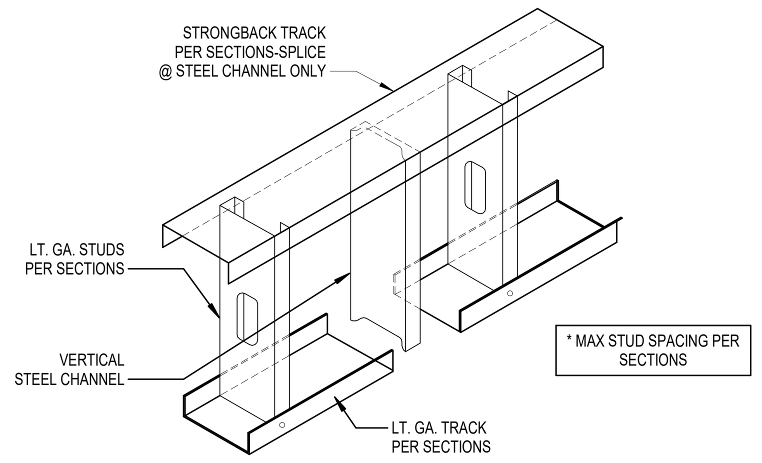

P / S004 — TYP. SPANDREL CONNECTION
Scale: 1" = 1'-0"

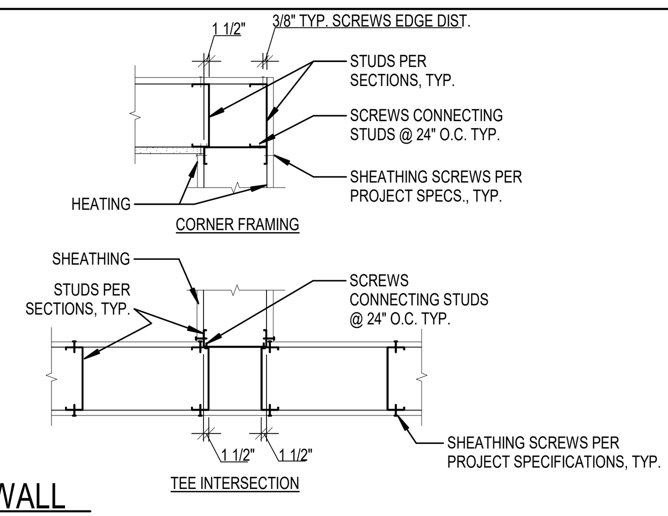

N / S004 — TYP. CORNER WALL
Scale: 1" = 1'-0"

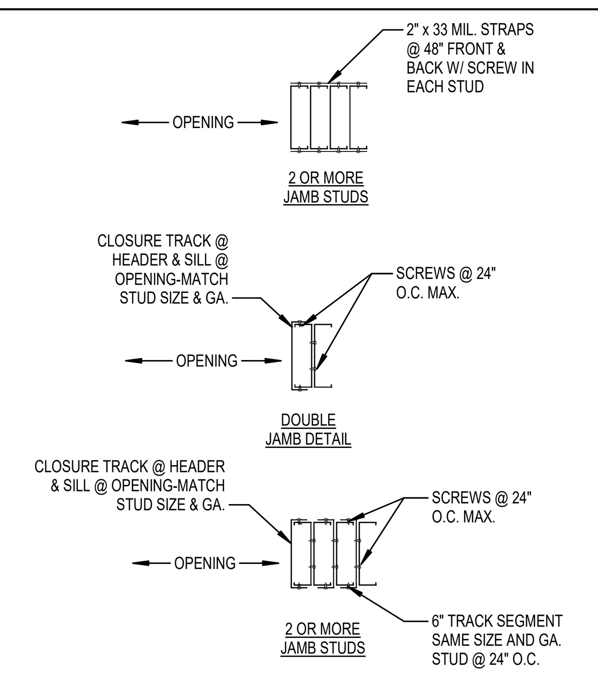

NOTES:
1. ERECTOR TO SELECT ONE OF JAMB OPTIONS INDICATED BELOW.
2. IF TRACK SECTIONS ARE INDICATED IN JAMB SCHEDULE THEY MUST BE FULL LENGTH, WITHOUT SPLICES.

M / S004 — ALTERNATE JAMB DETAILS (TYPICAL)
Scale: 1" = 1'-0"

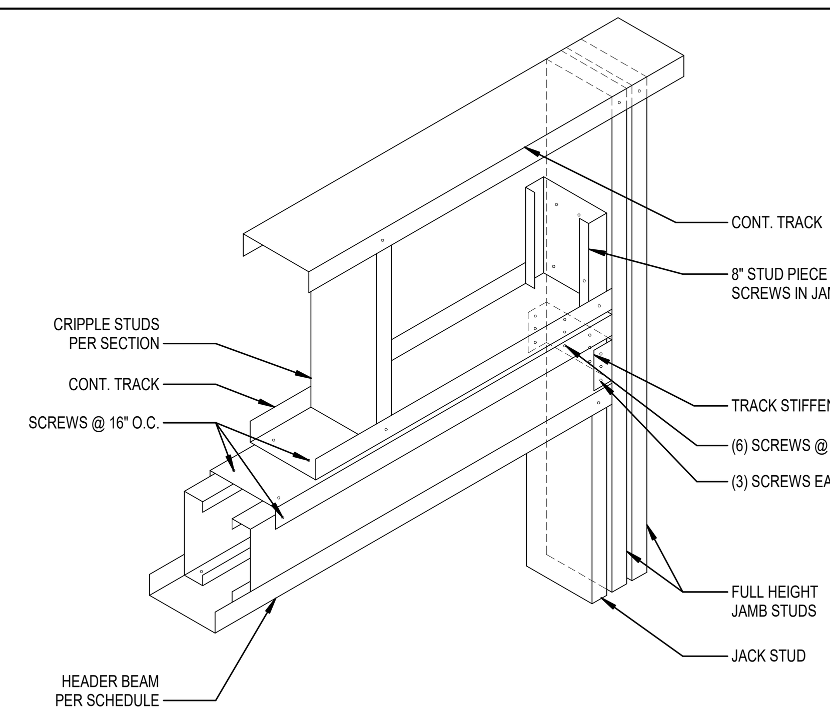

L / S004 — TYP. HEADER TO JAMB CONNECTION
Scale: 1" = 1'-0"

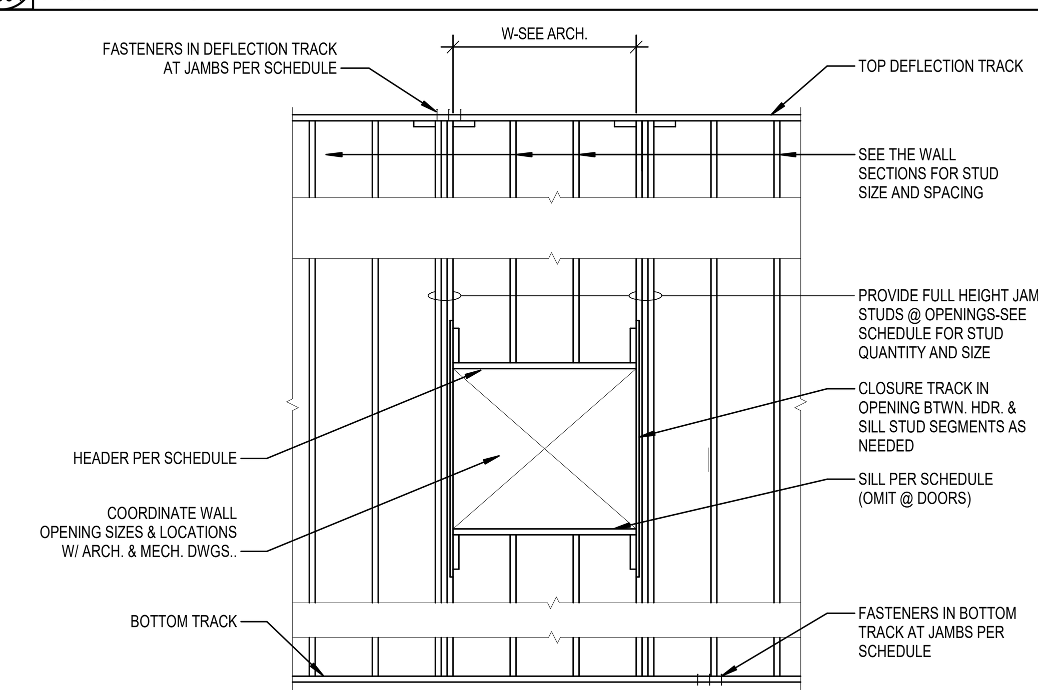

K / S004 — FRAME ELEV. @ WINDOW
Scale: 3/8" = 1'-0"

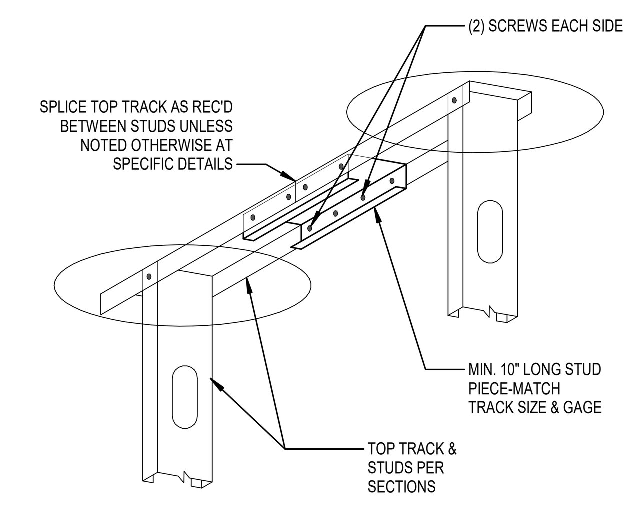

J / S004 — TYP. UNSUPPORTED TRACK SPLICE
Scale: 1" = 1'-0"

33 MILS = 20 GA.
43 MILS = 18 GA.
54 MILS = 16 GA.
68 MILS = 14 GA.
97 MILS = 12 GA.

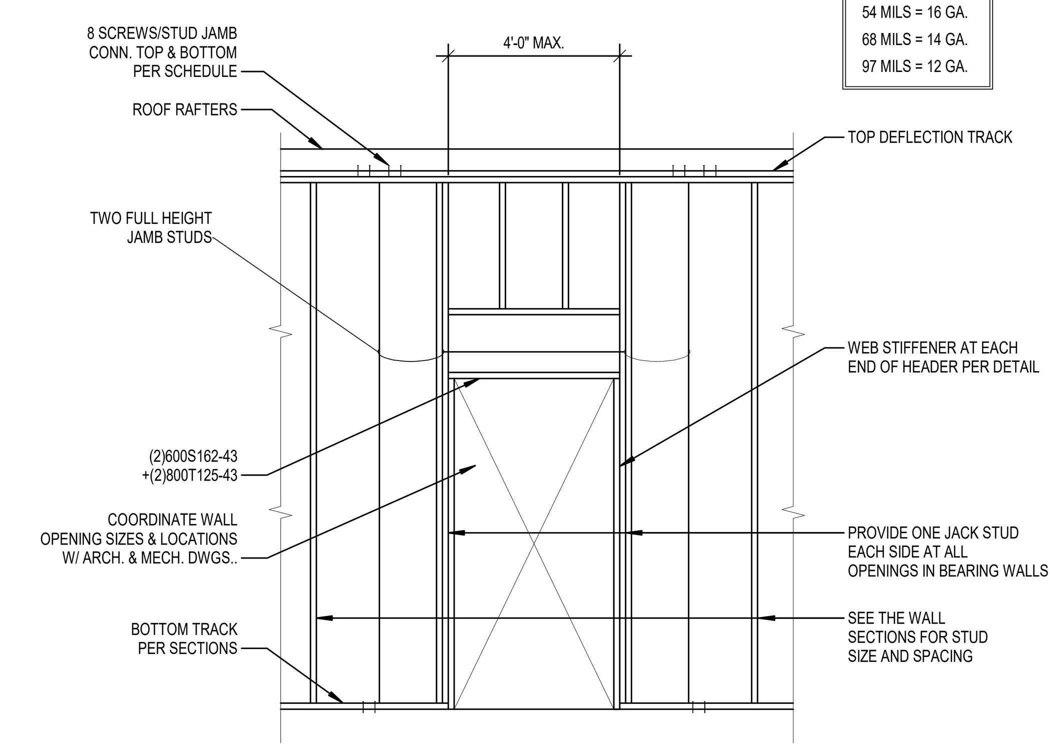

H / S004 — FRAME ELEV. @ DOOR OPT. 2
Scale: 3/8" = 1'-0"

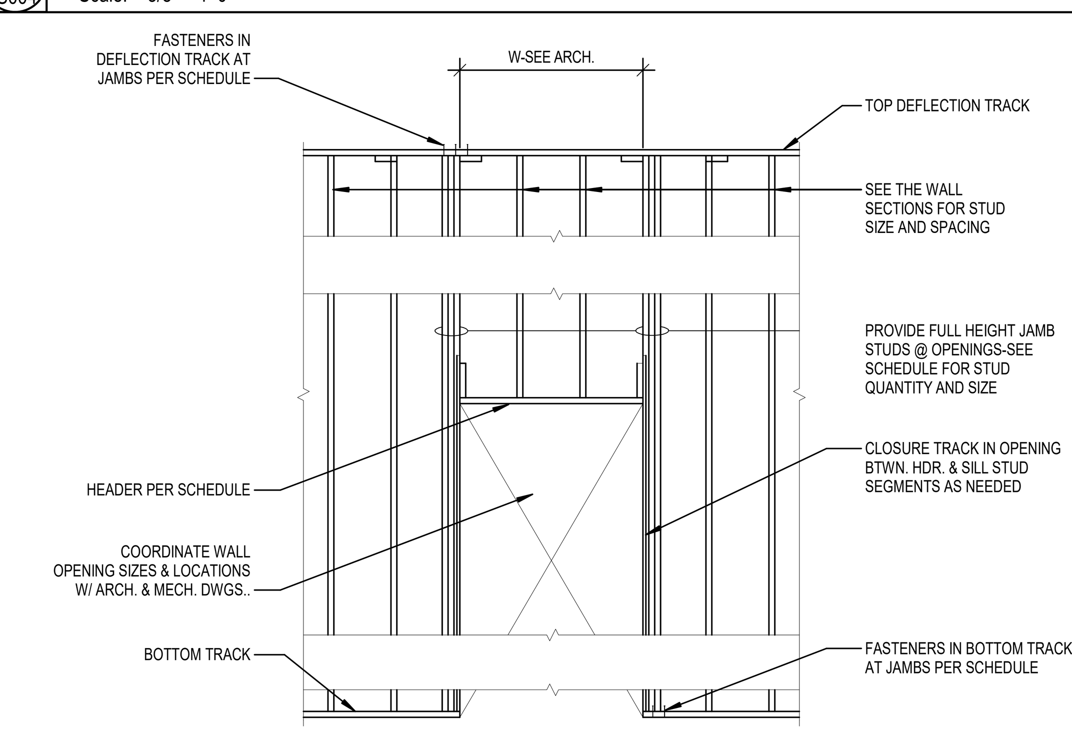

G / S004 — FRAME ELEV. @ DOOR
Scale: 3/8" = 1'-0"

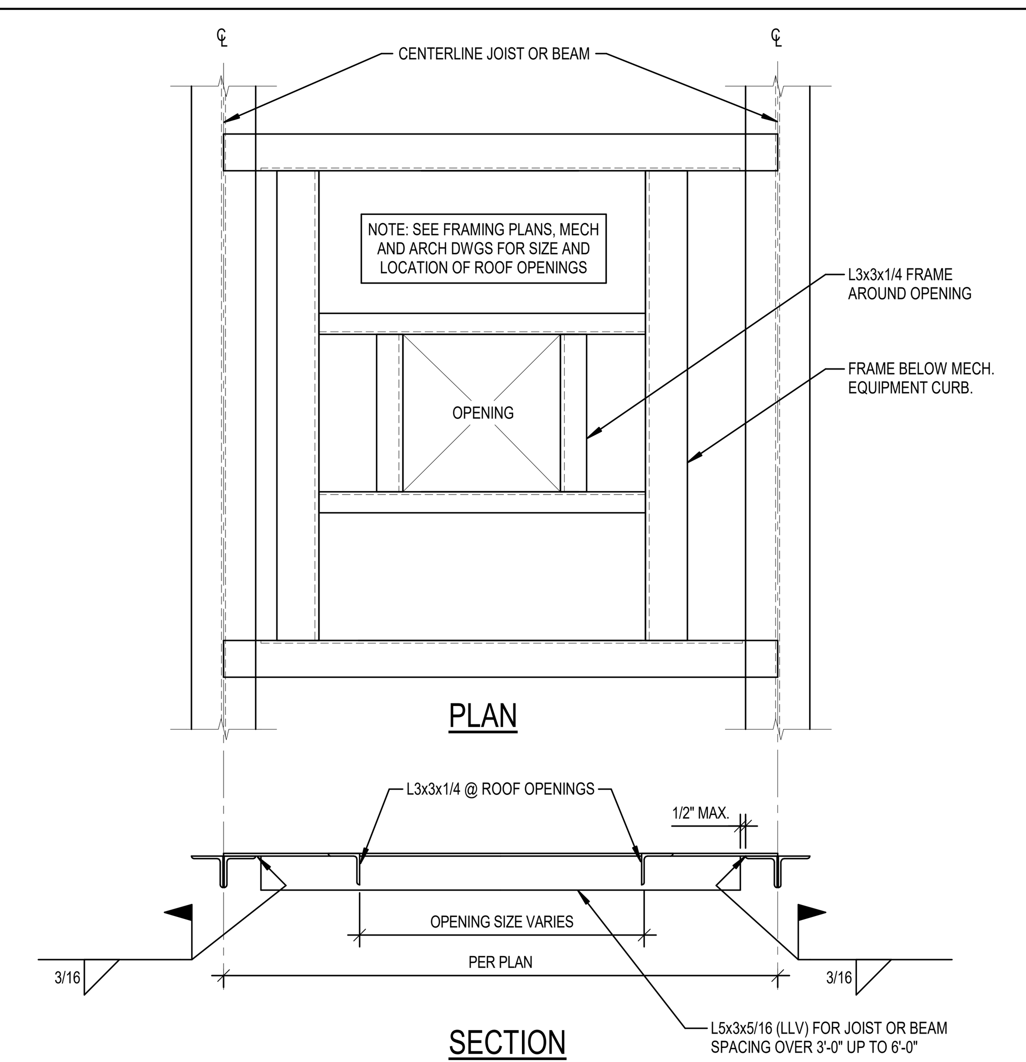

F / S004 — "H' FRAME ROOF DETAIL, TYPICAL
Scale: 1" = 1'-0"

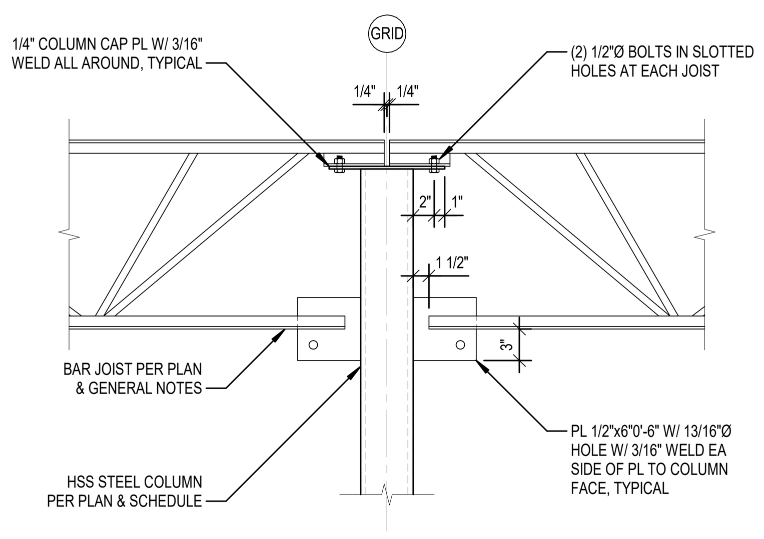

E / S004 — BAR JOIST TO COLUMN CONN., TYP.
Scale: 1" = 1'-0"

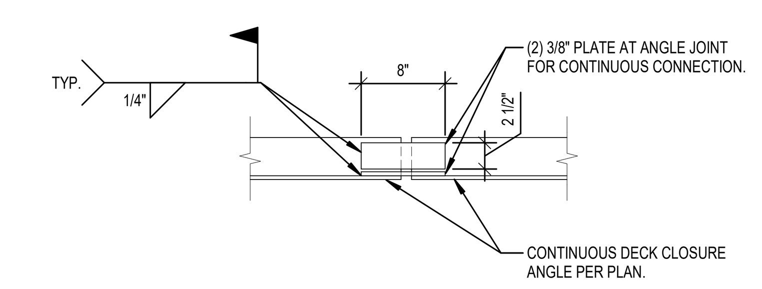

D / S004 — DECK CLOSURE ANGLE TYP.
Scale: 1" = 1'-0"

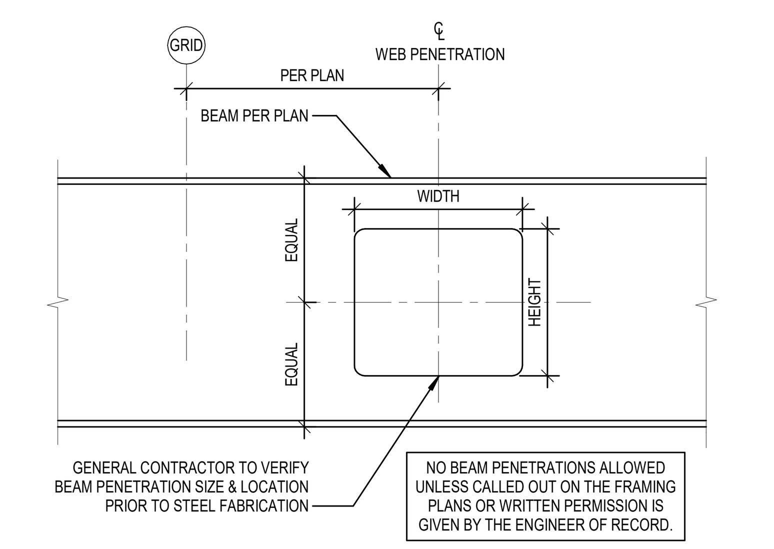

C / S004 — BEAM PENETRATION (TYPICAL)
Scale: 1" = 1'-0"

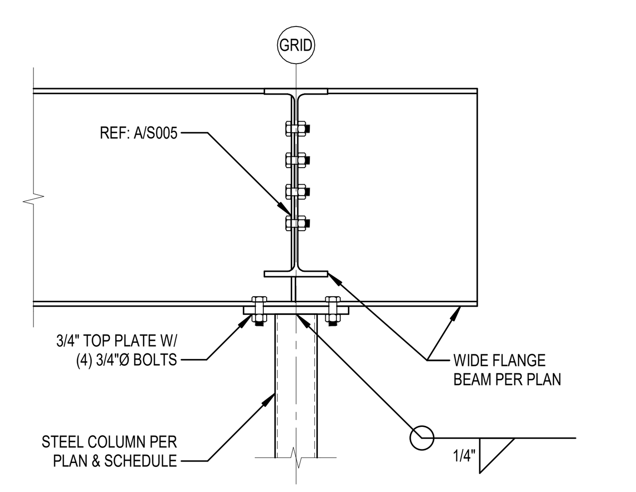

B / S004 — BEAM OVER COLUMN CONNECTION
Scale: 1" = 1'-0"

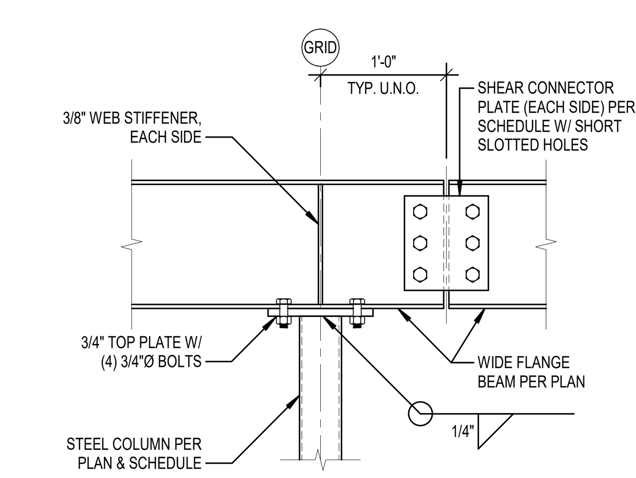

SHEAR PLATE SCHEDULE

BEAM SHAPE	SHEAR PL THICKNESS	NUMBER OF BOLTS (in)
W8	(2) 3/8"	2
W10	(2) 3/8"	2
W12	(2) 3/8"	3
W14	(2) 3/8"	3
W16	(2) 3/8"	4
W18	(2) 3/8"	4
W21	(2) 3/8"	5
W24	(2) 3/8"	6

A / S004 — BEAM OVER COLUMN CONNECTION (TYPICAL)
Scale: 1" = 1'-0"

NIXA POLICE DEPARTMENT
NORTH LEEANN DRIVE
NIXA, MO 65714

INSIGHT DESIGN IDeA ARCHITECTS
112 S. Main St., Nixa, MO 65714 Ph: 417-724-8553
CJD engineering | Energy | Innovation
olsson
METTEMEYER ENGINEERING LLC
Chiodini ARCHITECTS
Architecture / Interior Design / Graphics
1401 S. Brentwood Blvd. / Suite 575 / St. Louis, Missouri 63144
314-725-5588 / arch@chiodini.com

Reissue Date

Professional of Record
STATE OF MISSOURI — ALAN R. METTEMEYER — NUMBER E-2000162147 — REGISTERED PROFESSIONAL ENGINEER — 6-10-25
DATE

Copyright 2024 ©
These prints are the property of the architect and shall be usedonly for the project referenced above

Engineers & Detailers
BH, DD, LH, MH

Project #
24-0168

Date
06.10.2025

Drawing Title:
TYPICAL DETAILS

Sheet:
S004

PRINTED: 6/10/2025 1:58:12 PM

GENERAL PLAN NOTES

1. SEE SHEET S000 FOR GENERAL NOTES.
   SEE SHEET S001 FOR SPECIAL INSPECTION TABLES
   SEE SHEET S001 FOR BASIS FOR DESIGN CRITERIA.
   SEE SHEET S002 FOR SCHEDULES.
   SEE SHEETS S003 AND S004 FOR TYPICAL DETAILS.
2. TYPICAL SLAB-ON-GRADE SHALL BE 4" THICK REINFORCED W/ 6x6-W2.1xW2.1 WWR OVER 15-MIL VAPOR BARRIER. WWR SHALL BE SUPPORTED ON CHAIRS & LOCATED 1 1/2" FROM T/SLAB. PROVIDE (1) #4 BAR CONTINUOUS AT PERIMETER OF SLAB.

   SALLY PORT: SLAB-ON-GRADE SHALL BE 6" THICK REINFORCED W/ #4 BARS @ 18" O.C. EACH WAY OVER 15-MIL VAPOR BARRIER. BARS SHALL BE SUPPORTED ON CHAIRS & LOCATED 2" FROM T/SLAB. PROVIDE (1) #4 BAR CONTINUOUS AT PERIMETER OF SLAB.
3. PROVIDE (2) #4x4'-0" RE-ENTRANT CORNER BARS @ 4" THICK SLABS AND (2) #5x4'-0" RE-ENTRANT CORNER BARS @ 5" THICK OR THICKER SLABS, TYPICAL.
4. CJ - CONTROL OR CONSTRUCTION JOINT IN FLOOR SLAB, SEE DETAILS ON TYPICAL DETAILS SHEETS FOR ADDITIONAL INFORMATION.
5. SLOPE SLAB TO FLOOR DRAINS. REFER TO MEP FOR LOCATIONS.
6. REFER TO ARCHITECTURAL AND PLUMBING SHEETS FOR WATER-PROOFING, PERIMETER DRAINAGE AND STORM WATER DRAINAGE REQUIREMENTS.
7. GRID LINES ARE TO CENTERLINE OF COLUMN AND/OR OUTSIDE FACE OF WALL GIRT, AS INDICATED ON PLAN.
8. CENTER ALL SPREAD FOOTINGS ON CENTERLINE OF STEEL COLUMNS, U.N.O.
9. THE BUILDING SHALL NOT BE LOCATED ON SITE OFF OF THE STRUCTURAL DOCUMENTS. REFER TO THE CIVIL SITE PLAN AND ARCHITECTURAL PLANS FOR BUILDING LOCATION INFORMATION.
10. T/SLAB ELEVATION = 100'-0", U.N.O.
    REFERENCE THE FOUNDATION PLAN AND CIVIL FOR THE USGS ELEVATION.
11. T/FTG ELEVATION = 98'-8", U.N.O.
12. PRIOR TO CASTING INTERIOR THICKENED SLAB SOIL COMPACTION REPORT MUST BE APPROVED BY THE ENGINEER OF RECORD.
13. STEPPED FOOTING LOCATIONS SHOWN ON THE FOUNDATION PLAN WERE BASED OFF OF CIVIL GRADING PLANS AT TIME OF ISSUE. GENERAL CONTRACTOR TO VERIFY ALL FOOTING LOCATIONS WORK WITH CURRENT SEALED GRADING PLANS AND ALSO MEETS THE GEOTECHNICAL ENGINEER'S REQUIREMENTS FOR THE MINIMUM DEPTH OF THE FOOTINGS.

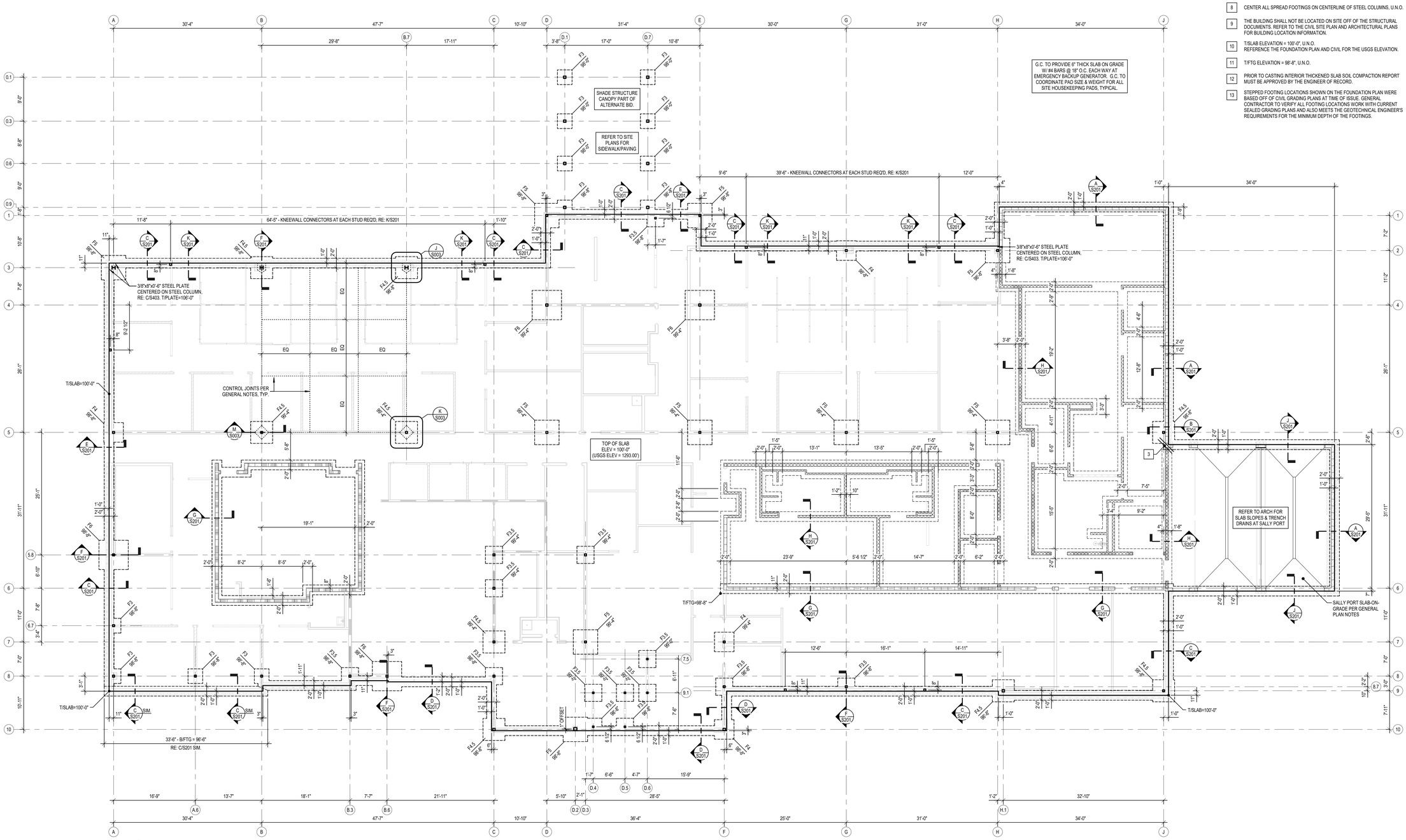

FOUNDATION PLAN
Scale: 1/8" = 1'-0"

PRINTED: 6/10/2025 1:57:54 PM

NIXA POLICE DEPARTMENT

NORTH LEEANN DRIVE
NIXA, MO 65714

INSIGHT DESIGN IDeA ARCHITECTS
112 S. Main St., Nixa, MO 65714 Ph: 417-724-8553

CJD engineering | Energy | Innovation

olsson

METTEMEYER ENGINEERING LLC

Christini ARCHITECTS
Architecture / Interior Design / Graphics
1401 S. Brentwood Blvd. / Suite 875 / St. Louis, Missouri 63144
314-726-5060 / arch@christini.com

Reissue Date

Professional of Record

STATE OF MISSOURI
ALAN R. METTEMEYER
NUMBER E-2000162147
6-10-25
PROFESSIONAL ENGINEER

DATE

Copyright 2024 ©
These prints are the property of the architect and shall be usedonly for the project referenced above

Engineers & Detailers
BH, DD, LH, MH

Project #
24-0168

Date
06.10.2025

Drawing Title:
FOUNDATION PLAN

Sheet:
S101

GENERAL PLAN NOTES

1. SEE SHEET S000 FOR GENERAL NOTES.
   SEE SHEET S001 FOR SPECIAL INSPECTION TABLES
   SEE SHEET S001 FOR BASIS FOR DESIGN CRITERIA.
   SEE SHEET S002 FOR SCHEDULES.
   SEE SHEETS S003 AND S004 FOR TYPICAL DETAILS.
2. SEE SHEET S101 FOR GENERAL FOUNDATION PLAN NOTES.
3. G.C. TO VERIFY TOP OF PARKING STRUCTURE PAD FOOTINGS ARE AT THE CORRECT ELEVATION BASED ON CIVIL'S GRADING ELEVATIONS OF SITE PAVING.
4. G.C. TO VERIFY & COORDINATE PARKING STRUCTURE PAD FOOTINGS ARE ALIGNED WITH FINAL LOCATIONS OF STEEL COLUMNS.
5. PARKING STRUCTURE PAD FOOTING SIZES ARE SUBJECT TO CHANGE ONCE PARKING STRUCTURE REACTIONS ARE PROVIDED TO E.O.R.
6. PARKING LOT PAVING & CURBS PER SITE PLANS.

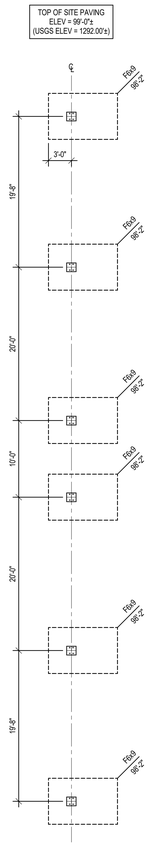

B S102 NORTH PARKING STRUCTURE FNDN
Scale: 1/8" = 1'-0"

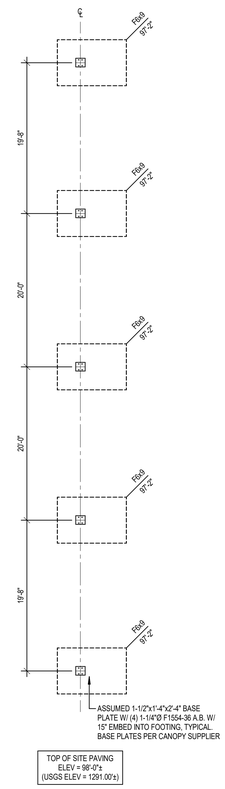

A S102 SOUTH PARKING STRUCTURE FNDN
Scale: 1/8" = 1'-0"

NIXA POLICE DEPARTMENT

NORTH LEEANN DRIVE
NIXA, MO 65714

INSIGHT DESIGN IDeA ARCHITECTS
112 S. Main St., Nixa, MO 65714 Ph: 417-724-8553

CJD engineering | Energy | Innovation

olsson

METTEMEYER ENGINEERING LLC

Chiodini ARCHITECTS
Architecture / Interior Design / Graphics
1401 S. Brentwood Blvd / Suite 575 / St. Louis, Missouri 63144
314-725-5088 / arch@chiodini.com

Reissue Date

Professional of Record

STATE OF MISSOURI
ALAN R. METTEMEYER
NUMBER E-2000162147
6-10-25
REGISTERED PROFESSIONAL ENGINEER

DATE

Copyright 2024 ©
These prints are the property of the architect and shall be usedonly for the project referenced above

Engineers & Detailers
BH, DD, LH, MH

Project #
24-0168

Date
06.10.2025

Drawing Title:
FOUNDATION PLANS

Sheet:
S102

PRINTED: 6/10/2025 1:58:14 PM

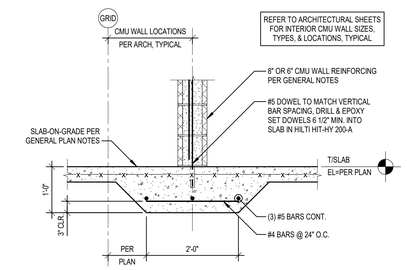

H S201 INTERIOR THICKENED SLAB @ CMU WALL
Scale: 3/4" = 1'-0"

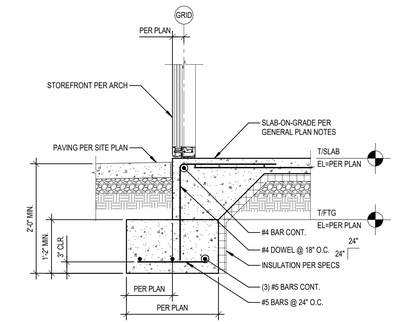

D S201 EXTERIOR TRENCH FOOTING @ CURTAIN WALL
Scale: 3/4" = 1'-0"

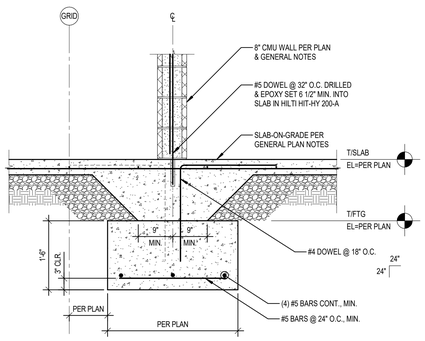

G S201 INTERIOR TRENCH FOOTING @ LOAD BEARING CMU WALL
Scale: 3/4" = 1'-0"

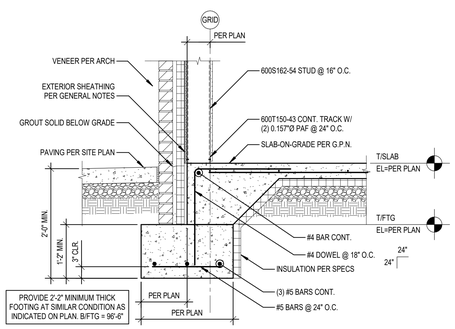

C S201 EXTERIOR TRENCH FOOTING @ LIGHT GAGE WALL
Scale: 3/4" = 1'-0"

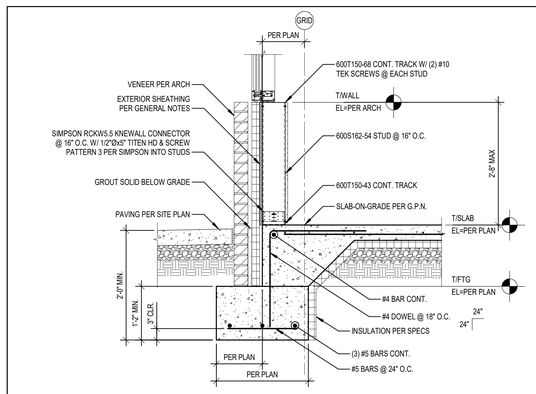

K S201 EXTERIOR FOUNDATION DETAIL @ KNEWALL CONN.
Scale: 3/4" = 1'-0"

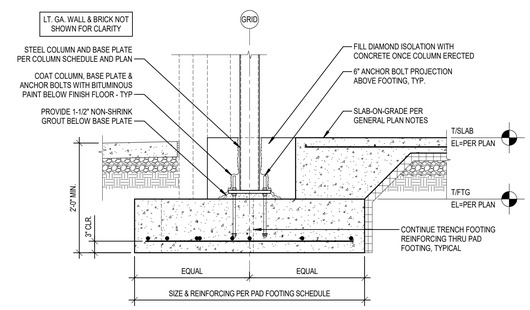

F S201 EXTERIOR STEEL COLUMN FOUNDATION
Scale: 3/4" = 1'-0"

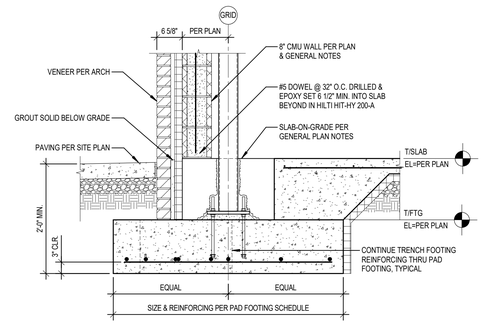

B S201 EXTERIOR PAD FOOTING @ STEEL COLUMN
Scale: 3/4" = 1'-0"

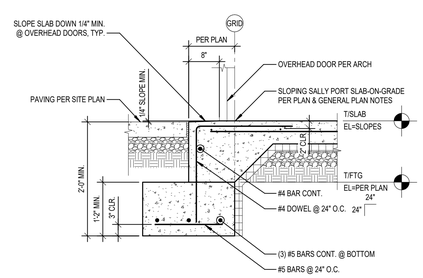

J S201 EXTERIOR TRENCH FOOTING @ OH DOOR
Scale: 3/4" = 1'-0"

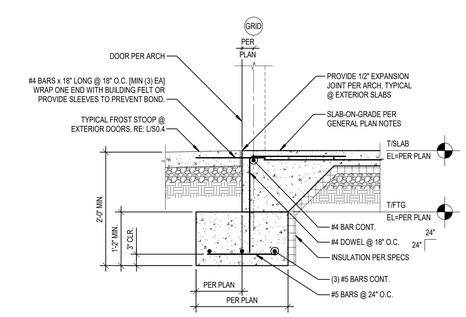

E S201 EXTERIOR TRENCH FOOTING @ DOOR
Scale: 3/4" = 1'-0"

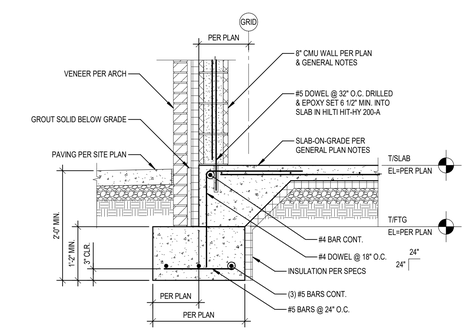

A S201 EXTERIOR TRENCH FOOTING @ CMU WALL
Scale: 3/4" = 1'-0"

NIXA POLICE DEPARTMENT

NORTH LEEANN DRIVE
NIXA, MO 65714

INSIGHT DESIGN IDeA ARCHITECTS
112 S. Main St., Nixa, MO 65714 Ph: 417-724-8553

CJD engineering | Energy | Innovation

olsson

METTEMEYER ENGINEERING LLC

Christini ARCHITECTS
Architecture / Interior Design / Graphics
1401 S. Brentwood Blvd. / Suite 875 / St. Louis, Missouri 63144
314-725-0080 / arch@christini.com

Reissue Date

Professional of Record

STATE OF MISSOURI
ALAN R. METTEMEYER
NUMBER E-2000162147
6-10-25
PROFESSIONAL ENGINEER

DATE

Copyright 2024 ©
These prints are the property of the architect and shall be usedonly for the project referenced above

Engineers & Detailers
BH, DD, LH, MH

Project #
24-0168

Date
06.10.2025

Drawing Title:
FOUNDATION DETAILS

Sheet:
S201

PRINTED: 6/10/2025 1:58:17 PM

GENERAL PLAN NOTES

1. SEE SHEET S000 FOR GENERAL NOTES.
   SEE SHEET S001 FOR SPECIAL INSPECTION TABLES
   SEE SHEET S001 FOR BASIS FOR DESIGN CRITERIA.
   SEE SHEET S002 FOR SCHEDULES.
   SEE SHEETS S003 AND S004 FOR TYPICAL DETAILS.
2. NOT ALL MECHANICAL OPENINGS AND / OR PENETRATIONS MAY BE INDICATED. REFER TO MECHANICAL DRAWINGS FOR ADDITIONAL INFORMATION.
3. ▶ = MOMENT CONNECTION, SEE DETAILS ON TYPICAL DETAILS SHEETS.
4. ● = SLIP CRITICAL STEEL CONN. FOR DRAG STRUT LOCATIONS PER PLAN.
5. STEEL COLUMNS ARE PER PLAN AND STEEL COLUMN SCHEDULE. STEEL COLUMNS ARE CENTERED ON GRID LINES, U.N.O.
6. STEEL POSTS ARE PER PLAN AND STEEL POST SCHEDULE. STEEL POSTS ARE CENTERED ON GRID LINES, U.N.O.
   STEEL POSTS DO NOT CONNECT TO FOUNDATION ELEMENTS.
7. HSS3x1-1/2x1/4 (LSH) DECK TUBES IN FLUTES @ 2'-6" O.C. PER PLAN & DETAILS.
8. L4x4x1/4 DECK CLOSURE ANGLE CONTINUOUS PER PLAN AND DETAILS. PLAN DIMENSIONS ARE FROM GRID LINE TO BACK OF ANGLE. DECK SHALL HAVE MINIMUM 2-1/2" BEARING OVER ANGLE.
9. 1/4"x0'-8" CONTINUOUS PLATE DECK CLOSURE PER PLAN AND DETAILS. PLAN DIMENSIONS ARE FROM GRID LINE TO EDGE OF PLATE. DECK SHALL HAVE MINIMUM 2-1/2" BEARING OVER PLATE.
10. CONTINUOUS L5x5x5/16 POUR STOP ANGLE & L4x3x1/4 (LLH) DECK CLOSURE ANGLE PER PLAN AND DETAILS. WELD ANGLES TOGETHER W/ (2) 3/16" 2-12 FILLET SKIP WELDS.
11. 1/4"x4"x0'-7" BENT PLATE CONTINUOUS TO SUPPORT ROOF DECK PER PLAN AND DETAILS.
12. JOIST BRIDGING ANGLES FOR CMU WALL ATTACHMENTS, RE: M/S401. NOT ALL LOCATIONS ARE SHOWN ON THE PLAN.
13. BOX BEAM - (2) 800S162-68 W/ 600T12554 AT T&B - T/BM=112'-0"
    BOX BEAM - (2) 800S162-68 W/ 600T12554 AT T&B - B/BM=107'-2"
    WELD HUC HANGER TO STEEL COLUMN FOR BOX BEAM CONNECTIONS.
14. PROVIDE 6" WIDE LT. GA. BOX BEAM AT STOREFRONT SILLS CONNECTED TO STEEL PLATES OR STEEL COLUMNS AS INDICATED ON PLANS & ELEVATIONS. CONNCECT BOX BEAM TO PERPINDICULAR LT. GA. WALLS AS REQUIRED.
15. 1/4"x4"x0'-4" CONTINUOUS BENT PLATE DECK CLOSURE PER PLAN AND DETAILS. PLAN DIMENSIONS ARE FROM GRID LINE TO EDGE OF BENT PLATE. DECK SHALL HAVE MINIMUM 2-1/2" BEARING OVER PLATE.
16. CONTINUOUS C6x8.2 OVER FLUTE OF DECK. LOCATE PER PLAN & DETAIL E/S404.

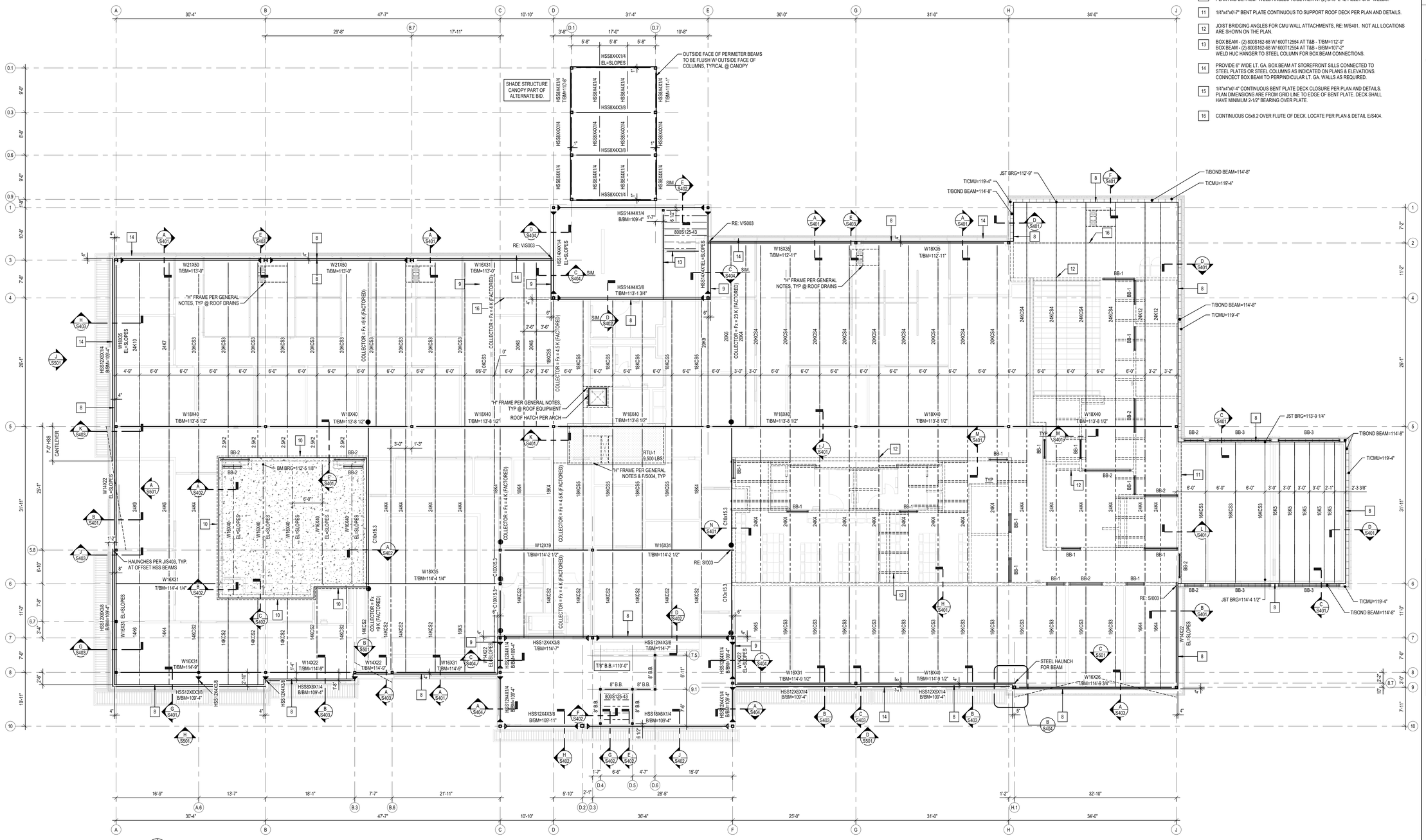

A S301 LOW ROOF FRAMING PLAN
Scale: 1/8" = 1'-0"

PRINTED: 6/10/2025 1:58:19 PM

NIXA POLICE DEPARTMENT

NORTH LEEANN DRIVE
NIXA, MO 65714

INSIGHT DESIGN IDeA ARCHITECTS
112 S. Main St., Nixa, MO 65714 Ph: 417-724-8553

CJD engineering | Energy | Innovation

olsson

METTEMEYER ENGINEERING LLC

Chiodini ARCHITECTS
Architecture / Interior Design / Graphics
1401 S. Brentwood Blvd. / Suite 570 / St. Louis, Missouri 63144
314-725-5088 / art@chiodini.com

Reissue Date

Professional of Record

STATE OF MISSOURI — ALAN R. METTEMEYER — NUMBER E-22000102147 — PROFESSIONAL ENGINEER — 6-10-25

DATE

Copyright 2024 ©
These prints are the property of the architect and shall be usedonly for the project referenced above

Engineers & Detailers
BH, DD, LH, MH

Project #
24-0168

Date
06.10.2025

Drawing Title:
LOW ROOF FRAMING PLAN

Sheet:
S301

GENERAL PLAN NOTES

1. SEE SHEET S000 FOR GENERAL NOTES.
   SEE SHEET S001 FOR SPECIAL INSPECTION TABLES
   SEE SHEET S001 FOR BASIS FOR DESIGN CRITERIA.
   SEE SHEET S002 FOR SCHEDULES.
   SEE SHEETS S003 AND S004 FOR TYPICAL DETAILS.
2. NOT ALL MECHANICAL OPENINGS AND / OR PENETRATIONS MAY BE INDICATED. REFER TO MECHANICAL DRAWINGS FOR ADDITIONAL INFORMATION.
3. ▶ = MOMENT CONNECTION, SEE DETAILS ON TYPICAL DETAILS SHEETS.
4. ● = SLIP CRITICAL STEEL CONN. FOR DRAG STRUT LOCATIONS PER PLAN.
5. STEEL COLUMNS ARE PER PLAN AND STEEL COLUMN SCHEDULE. STEEL COLUMNS ARE CENTERED ON GRID LINES, U.N.O.
6. STEEL POSTS ARE PER PLAN AND STEEL POST SCHEDULE. STEEL POSTS ARE CENTERED ON GRID LINES, U.N.O.
   STEEL POSTS DO NOT CONNECT TO FOUNDATION ELEMENTS.
7. HSS3x1-1/2x1/4 (LSH) DECK TUBES IN FLUTES @ 2'-6" O.C. PER PLAN & DETAILS.
8. L4x4x1/4 DECK CLOSURE ANGLE CONTINUOUS PER PLAN AND DETAILS. PLAN DIMENSIONS ARE FROM GRID LINE TO BACK OF ANGLE. DECK SHALL HAVE MINIMUM 2-1/2" BEARING OVER ANGLE.
9. 1/4"x0'-8" CONTINUOUS PLATE DECK CLOSURE PER PLAN AND DETAILS. PLAN DIMENSIONS ARE FROM GRID LINE TO EDGE OF PLATE. DECK SHALL HAVE MINIMUM 2-1/2" BEARING OVER PLATE.
10. CONTINUOUS L5x5x5/16 POUR STOP ANGLE & L4x3x1/4 (LLH) DECK CLOSURE ANGLE PER PLAN AND DETAILS. WELD ANGLES TOGETHER W/ (2) 3/16" 2-12 FILLET SKIP WELDS.
11. 1/4"x4"x0'-7" BENT PLATE CONTINUOUS TO SUPPORT ROOF DECK PER PLAN AND DETAILS.
12. JOIST BRIDGING ANGLES FOR CMU WALL ATTACHMENTS, RE: M/S401. NOT ALL LOCATIONS ARE SHOWN ON THE PLAN.
13. BOX BEAM - (2) 800S162-68 W/ 600T12554 AT T&B - T/BM=112'-0"
    BOX BEAM - (2) 800S162-68 W/ 600T12554 AT T&B - B/BM=107'-2"
    WELD HUC HANGER TO STEEL COLUMN FOR BOX BEAM CONNECTIONS.
14. PROVIDE 6" WIDE LT. GA. BOX BEAM AT STOREFRONT SILLS CONNECTED TO STEEL PLATES OR STEEL COLUMNS AS INDICATED ON PLANS & ELEVATIONS. CONNCECT BOX BEAM TO PERPINDICULAR LT. GA. WALLS AS REQUIRED.
15. 1/4"x4"x0'-4" CONTINUOUS BENT PLATE DECK CLOSURE PER PLAN AND DETAILS. PLAN DIMENSIONS ARE FROM GRID LINE TO EDGE OF BENT PLATE. DECK SHALL HAVE MINIMUM 2-1/2" BEARING OVER PLATE.
16. CONTINUOUS C6x8.2 OVER FLUTE OF DECK. LOCATE PER PLAN & DETAIL E/S404.

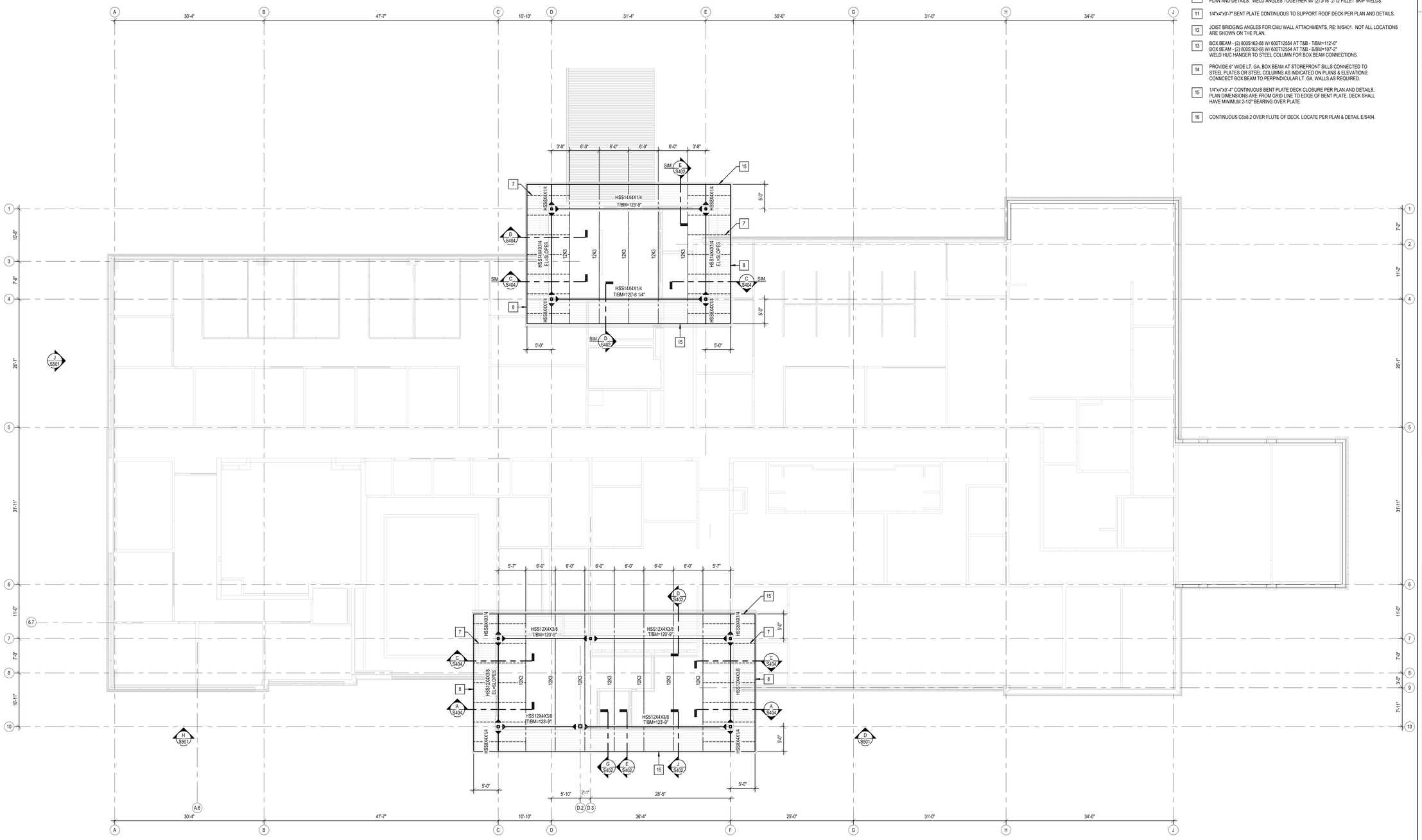

A S302 HIGH ROOF FRAMING PLAN
Scale: 1/8" = 1'-0"

PRINTED: 6/10/2025 1:58:21 PM

NIXA POLICE DEPARTMENT

NORTH LEEANN DRIVE
NIXA, MO 65714

INSIGHT DESIGN IDeA ARCHITECTS
112 S. Main St., Nixa, MO 65714 Ph: 417-724-8553

CJD engineering | Energy | Innovation

olsson

METTEMEYER ENGINEERING LLC

Christini ARCHITECTS
Architecture / Interior Design / Graphics
1401 S. Brentwood Blvd. / Suite 875 / St. Louis, Missouri 63144
314-726-5060 / arch@christini.com

Reissue Date

Professional of Record

STATE OF MISSOURI
ALAN R. METTEMEYER
NUMBER E-2000162147
6-10-25
PROFESSIONAL ENGINEER

DATE _____

Copyright 2024 ©
These prints are the property of the architect and shall be usedonly for the project referenced above

Engineers & Detailers
BH, DD, LH, MH

Project #
24-0168

Date
06.10.2025

Drawing Title:
HIGH ROOF FRAMING PLAN

Sheet:
S302

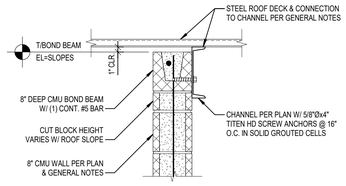

N S401 FRAMING DETAIL
Scale: 1" = 1'-0"

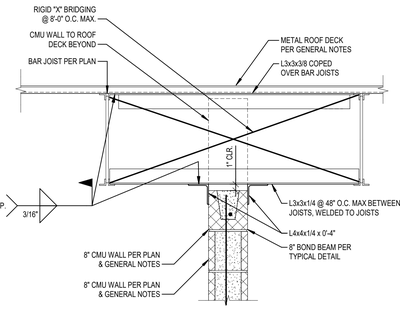

WALL PARALLEL TO JOISTS

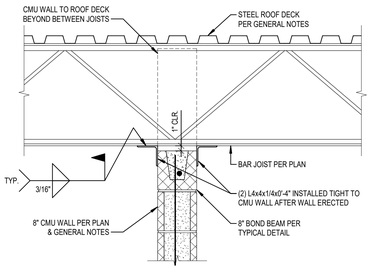

WALL PERPENDICULAR TO JOISTS

M S401 FRAMING DETAIL
Scale: 1" = 1'-0"

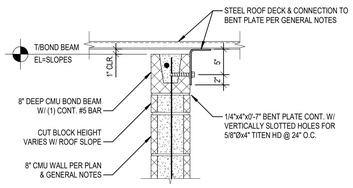

L S401 FRAMING DETAIL
Scale: 1" = 1'-0"

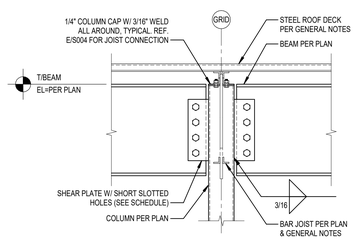

K S401 FRAMING DETAIL
Scale: 1" = 1'-0"

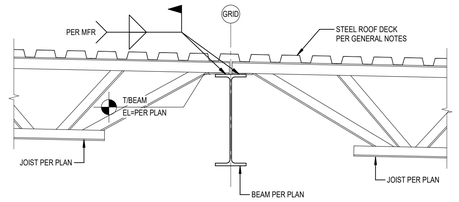

J S401 FRAMING DETAIL
Scale: 1" = 1'-0"

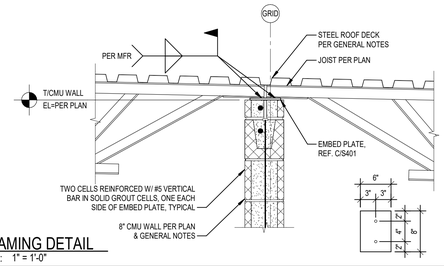

H S401 FRAMING DETAIL
Scale: 1" = 1'-0"

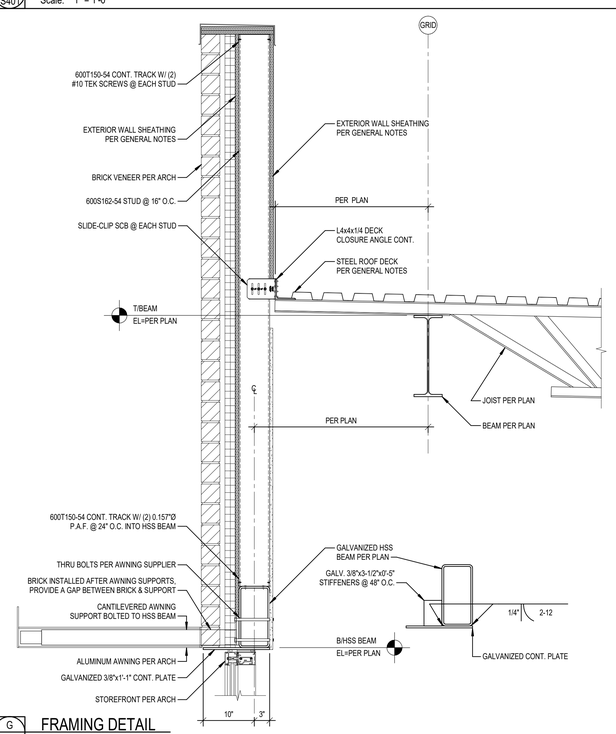

G S401 FRAMING DETAIL
Scale: 1" = 1'-0"

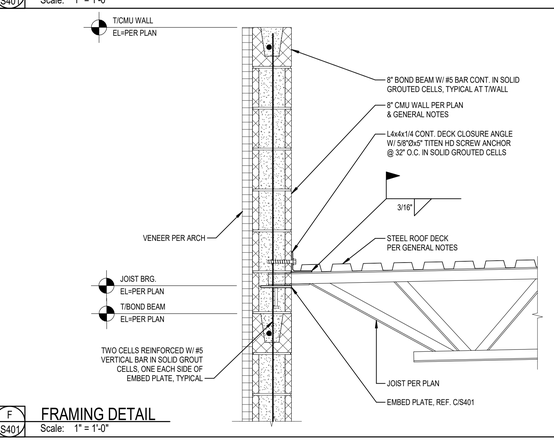

F S401 FRAMING DETAIL
Scale: 1" = 1'-0"

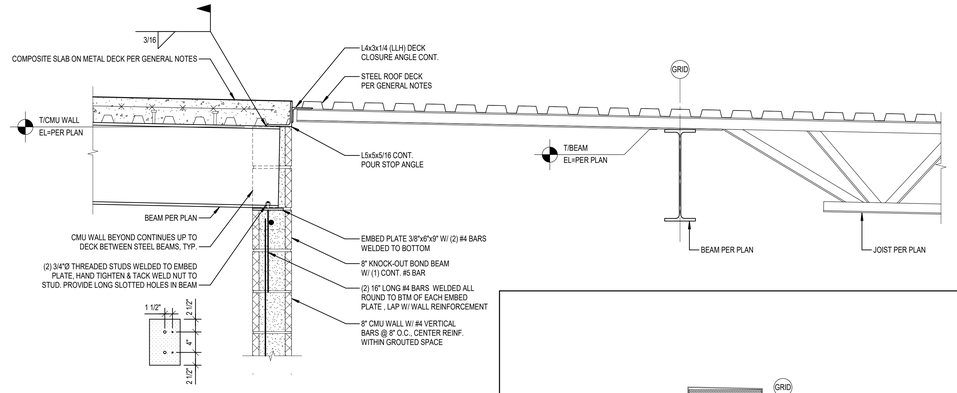

E S401 FRAMING DETAIL
Scale: 1" = 1'-0"

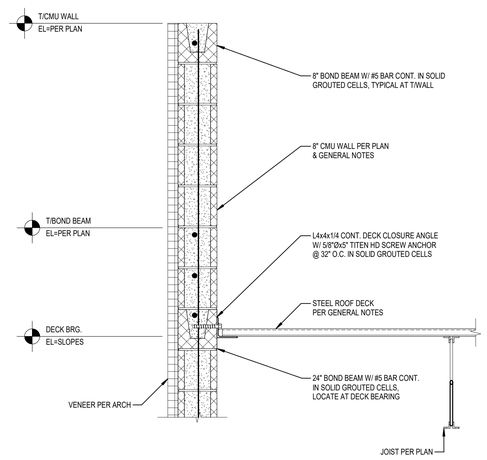

D S401 FRAMING DETAIL
Scale: 1" = 1'-0"

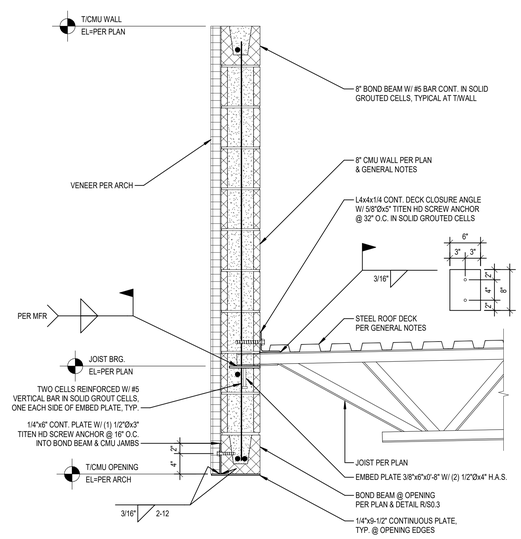

C S401 FRAMING DETAIL
Scale: 1" = 1'-0"

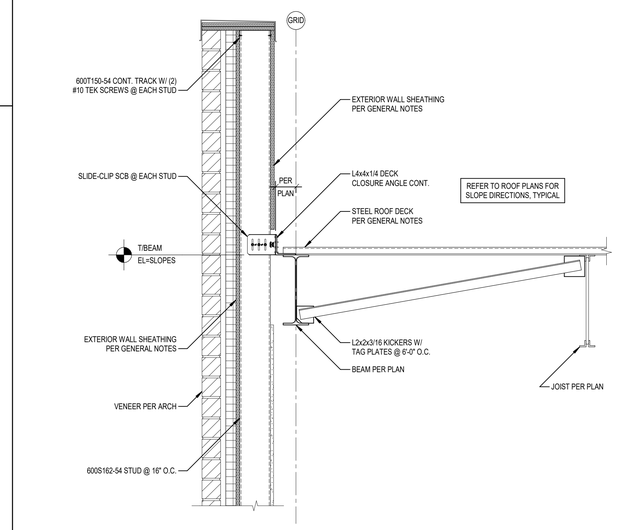

B S401 FRAMING DETAIL
Scale: 1" = 1'-0"

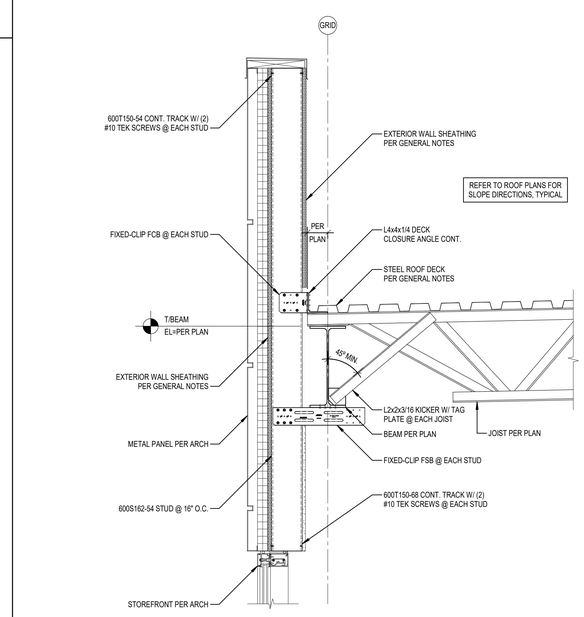

A S401 FRAMING DETAIL
Scale: 1" = 1'-0"

NIXA POLICE DEPARTMENT

NORTH LEEANN DRIVE
NIXA, MO 65714

INSIGHT DESIGN IDeA ARCHITECTS
112 S. Main St., Nixa, MO 65714 Ph: 417-724-8553

CJD engineering | Energy | Innovation

olsson

METTEMEYER ENGINEERING LLC

Chiodini ARCHITECTS
Architecture / Interior Design / Graphics
1401 S. Brentwood Blvd. / Suite 570 / St. Louis, Missouri 63144
314-725-0088 # art@chiodini.com

Reissue Date

Professional of Record

STATE OF MISSOURI
ALAN R. METTEMEYER
NUMBER E-2000162147
6-10-25
REGISTERED PROFESSIONAL ENGINEER

DATE _____

Copyright 2024 ©
These prints are the property of the architect and shall be usedonly for the project referenced above

Engineers & Detailers
BH, DD, LH, MH

Project #
24-0168

Date
06.10.2025

Drawing Title:
FRAMING DETAILS

Sheet:
S401

PRINTED: 6/10/2025 1:58:24 PM

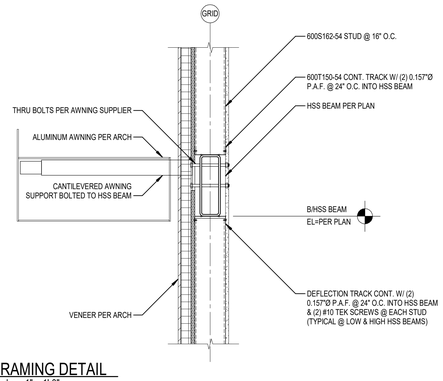

H S402 FRAMING DETAIL
Scale: 1" = 1'-0"

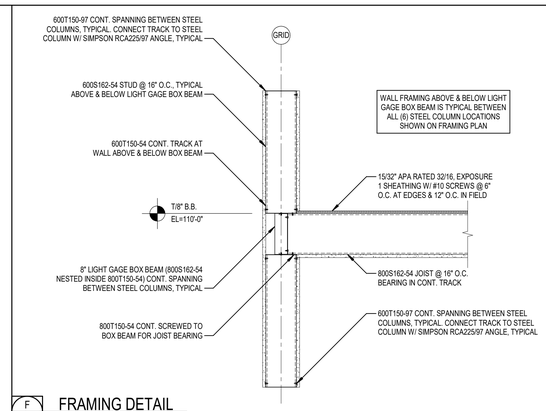

F S402 FRAMING DETAIL
Scale: 1" = 1'-0"

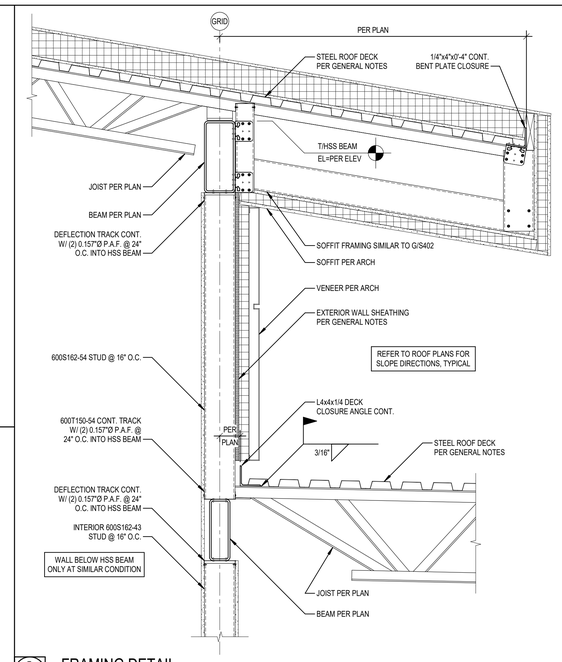

D S402 FRAMING DETAIL
Scale: 1" = 1'-0"

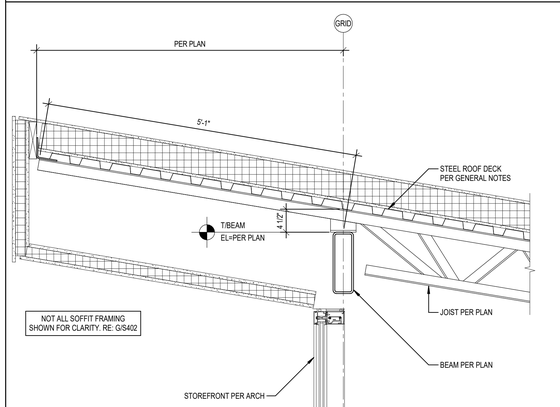

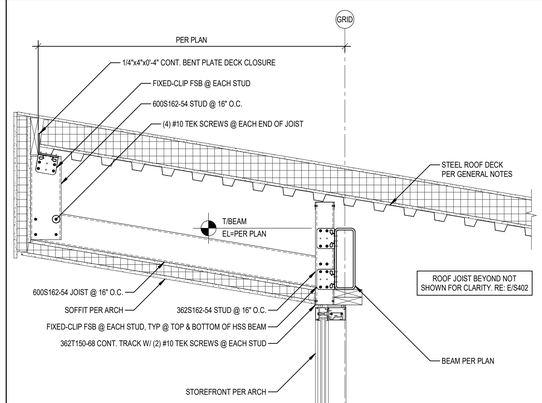

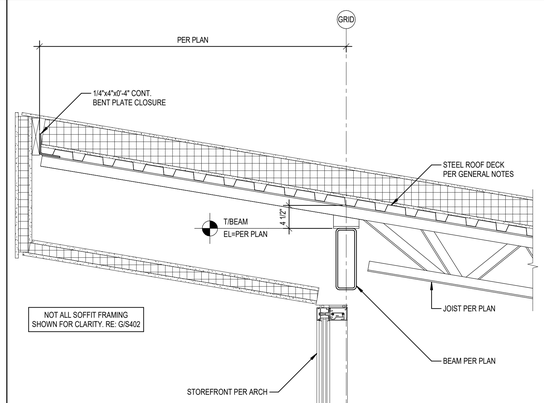

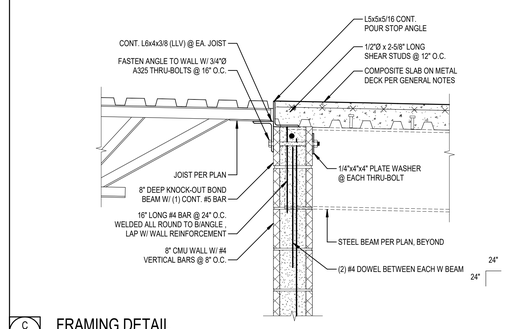

C S402 FRAMING DETAIL
Scale: 1" = 1'-0"

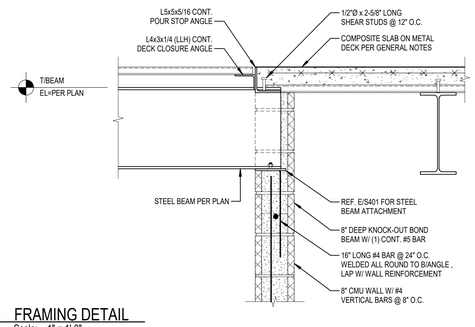

B S402 FRAMING DETAIL
Scale: 1" = 1'-0"

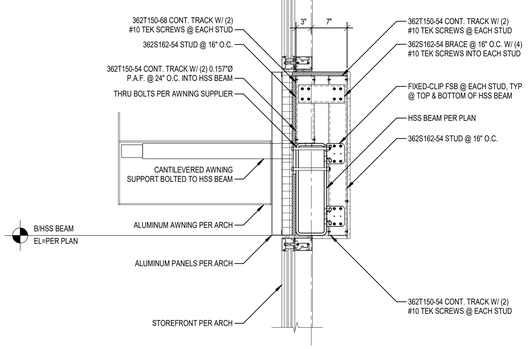

J S402 FRAMING DETAIL
Scale: 1" = 1'-0"

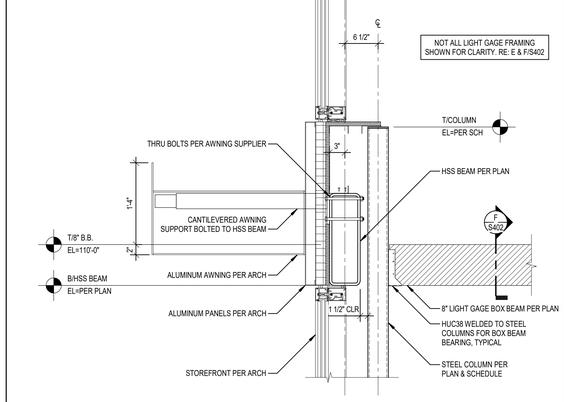

G S402 FRAMING DETAIL
Scale: 1" = 1'-0"

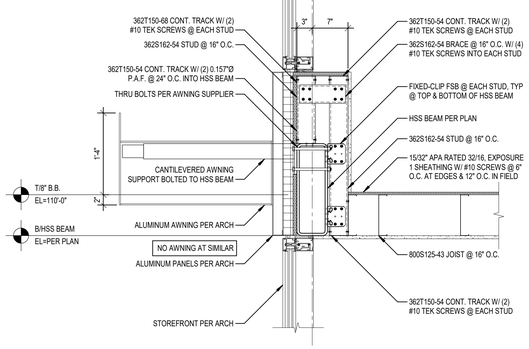

E S402 FRAMING DETAIL
Scale: 1" = 1'-0"

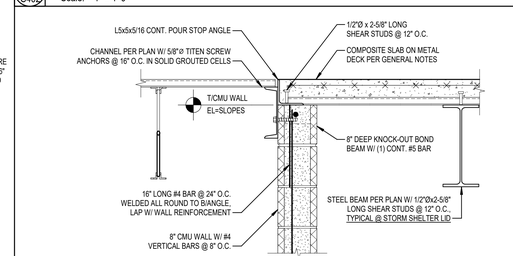

A S402 FRAMING DETAIL
Scale: 1" = 1'-0"

NIXA POLICE DEPARTMENT

NORTH LEEANN DRIVE
NIXA, MO 65714

INSIGHT DESIGN IDeA ARCHITECTS
112 S. Main St., Nixa, MO 65714 Ph: 417-724-8553

CJD engineering | Energy | Innovation

olsson

METTEMEYER ENGINEERING LLC

Chiodini ARCHITECTS
Architecture / Interior Design / Graphics
1401 S. Brentwood Blvd. | Suite 275 | St. Louis, Missouri 63144
314-200-0080 | arch@chiodini.com

Reissue Date

Professional of Record

STATE OF MISSOURI
ALAN R. METTEMEYER
NUMBER E-2000162147
6-10-25
PROFESSIONAL ENGINEER

DATE _____

Copyright 2024 ©
These prints are the property of the architect and shall be usedonly for the project referenced above

Engineers & Detailers
BH, DD, LH, MH

Project #
24-0168

Date
06.10.2025

Drawing Title:
FRAMING DETAILS

Sheet:
S402

PRINTED: 6/10/2025 1:58:26 PM

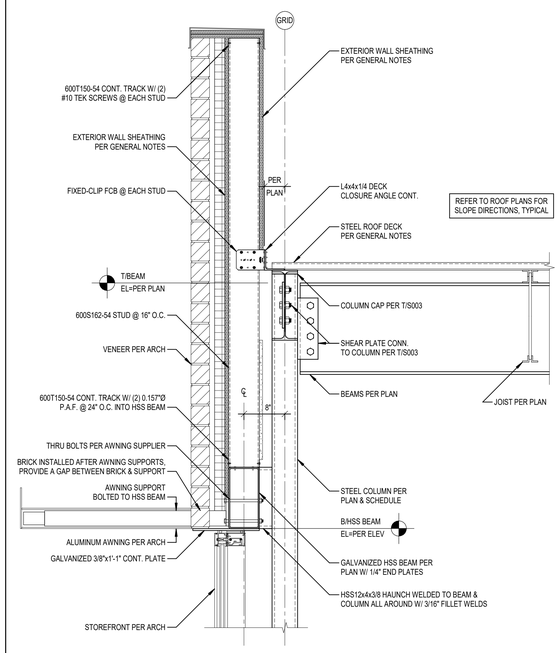

K S403 FRAMING DETAIL
Scale: 1" = 1'-0"

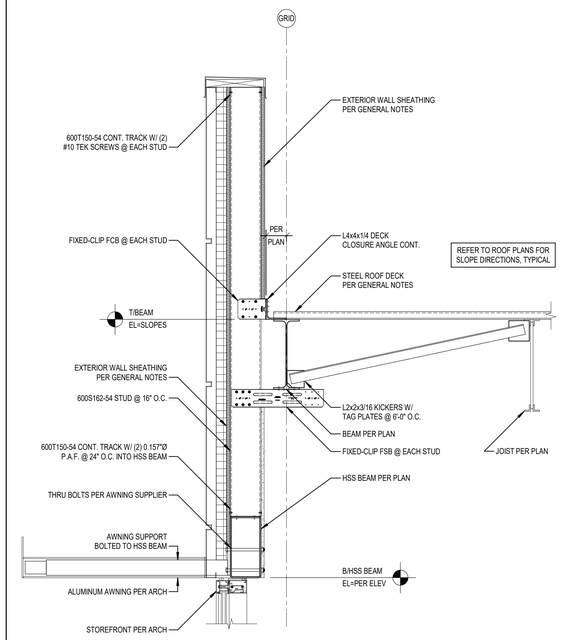

H S403 FRAMING DETAIL
Scale: 1" = 1'-0"

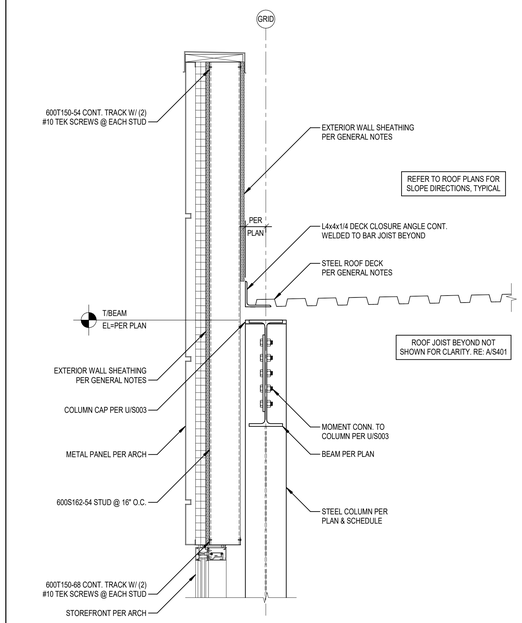

E S403 FRAMING DETAIL
Scale: 1" = 1'-0"

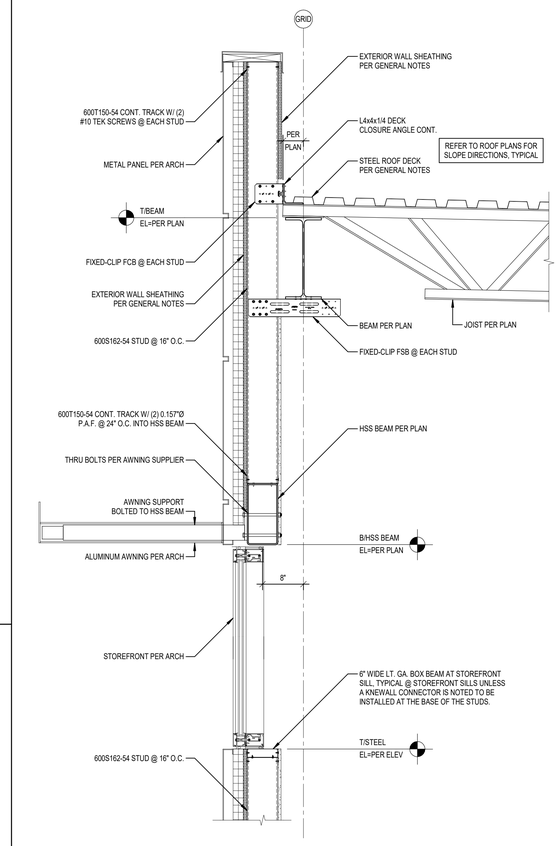

B S403 FRAMING DETAIL
Scale: 1" = 1'-0"

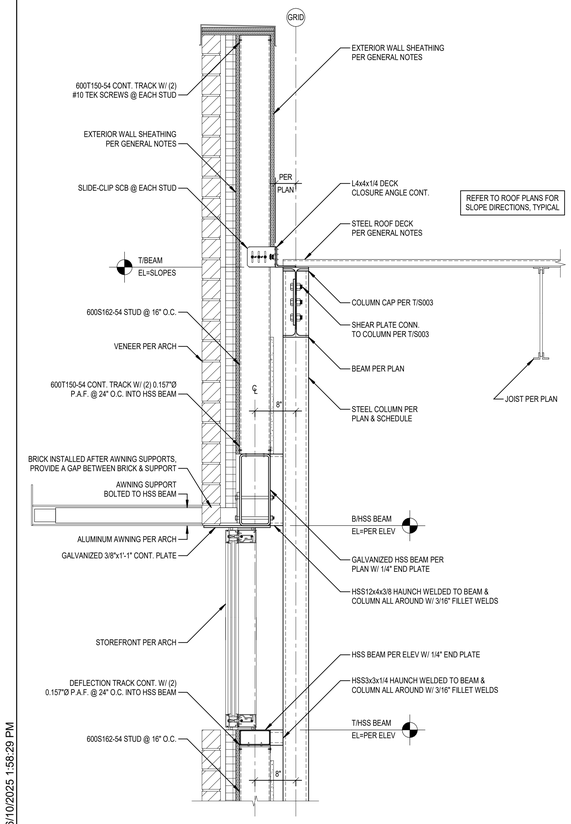

J S403 FRAMING DETAIL
Scale: 1" = 1'-0"

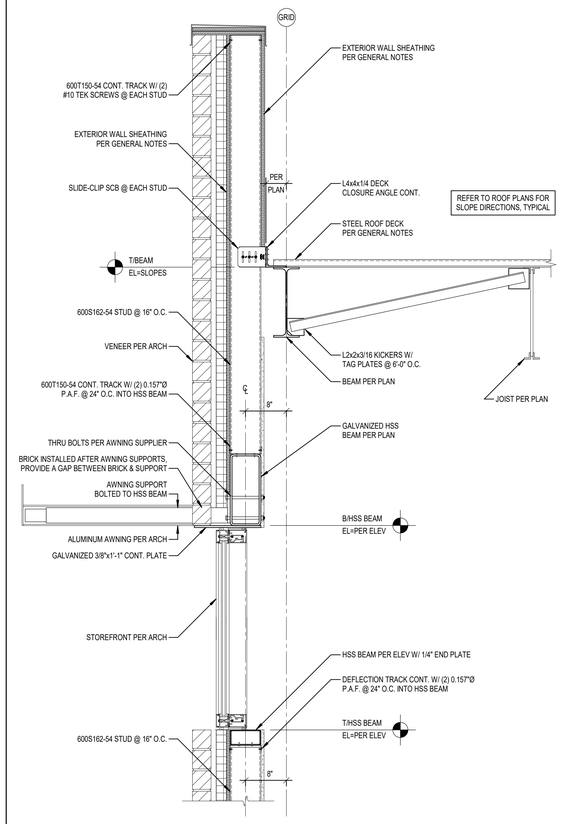

G S403 FRAMING DETAIL
Scale: 1" = 1'-0"

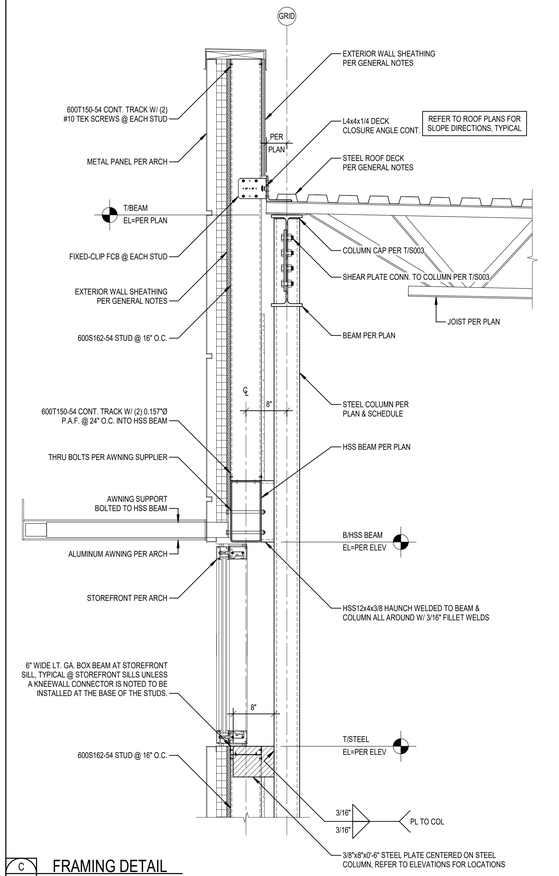

C S403 FRAMING DETAIL
Scale: 1" = 1'-0"

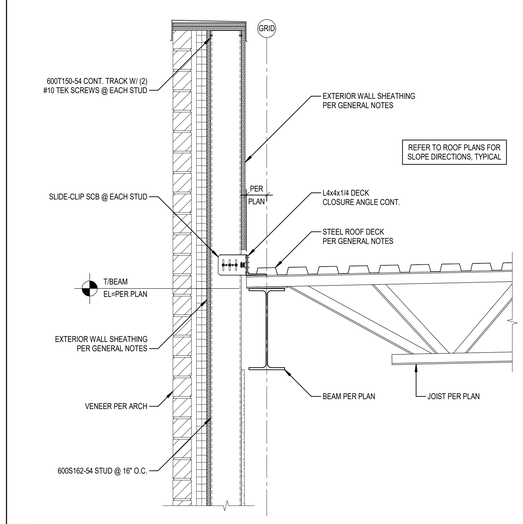

A S403 FRAMING DETAIL
Scale: 1" = 1'-0"

PRINTED: 6/10/2025 1:58:29 PM

NIXA POLICE DEPARTMENT

NORTH LEEANN DRIVE
NIXA, MO 65714

INSIGHT DESIGN IDeA ARCHITECTS
112 S. Main St., Nixa, MO 65714 Ph: 417-724-8553

CJD engineering | Energy | Innovation

olsson

METTEMEYER ENGINEERING LLC

Christini ARCHITECTS
Architecture / Interior Design / Graphics
1401 S. Brentwood Blvd. / Suite 975 / St. Louis, Missouri 63144
314-726-5060 / arch@christini.com

Reissue Date

Professional of Record

STATE OF MISSOURI
ALAN R. METTEMEYER
NUMBER E-2000162147
6-10-25
PROFESSIONAL ENGINEER

DATE

Copyright 2024 ©
These prints are the property of the architect and shall be usedonly for the project referenced above

Engineers & Detailers
BH, DD, LH, MH

Project #
24-0168

Date
06.10.2025

Drawing Title:
FRAMING DETAILS

Sheet:
S403

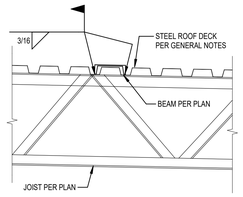

E S404 FRAMING DETAIL
Scale: 1" = 1'-0"

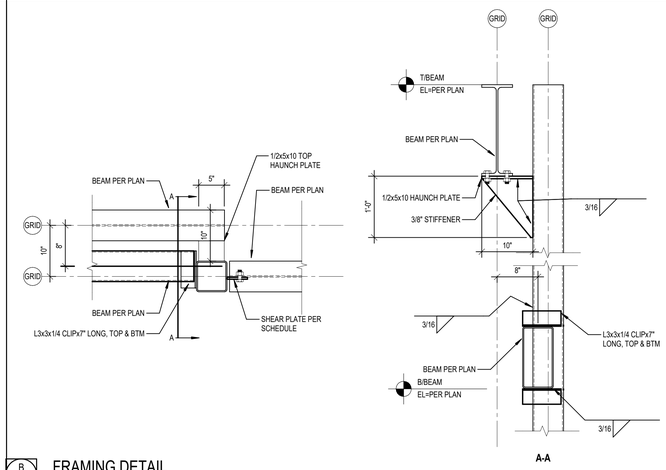

B S404 FRAMING DETAIL
Scale: 1" = 1'-0"

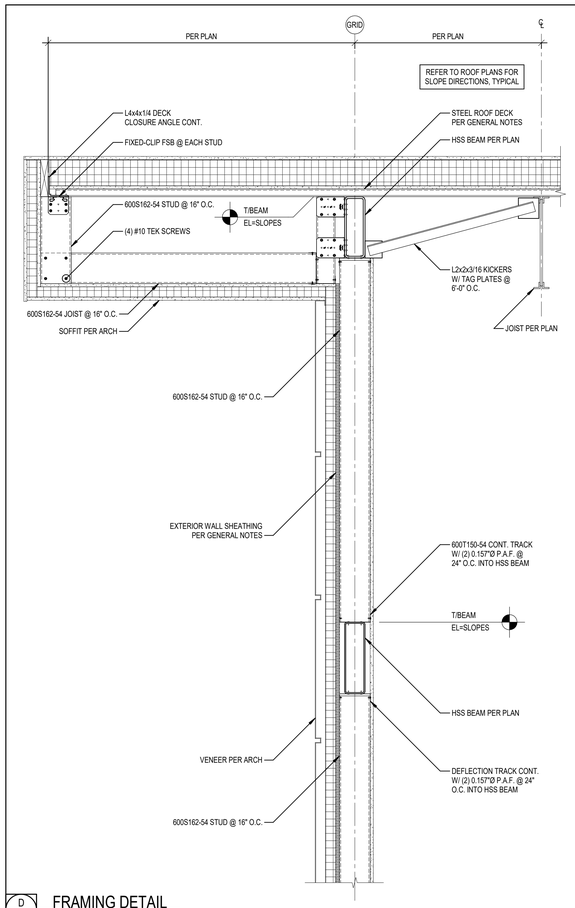

D S404 FRAMING DETAIL
Scale: 1" = 1'-0"

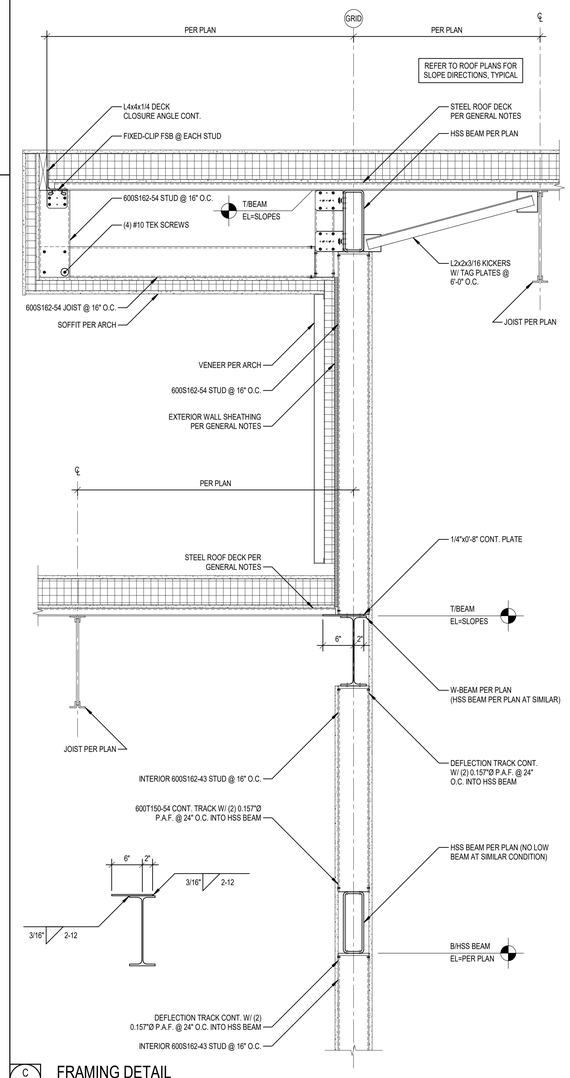

C S404 FRAMING DETAIL
Scale: 1" = 1'-0"

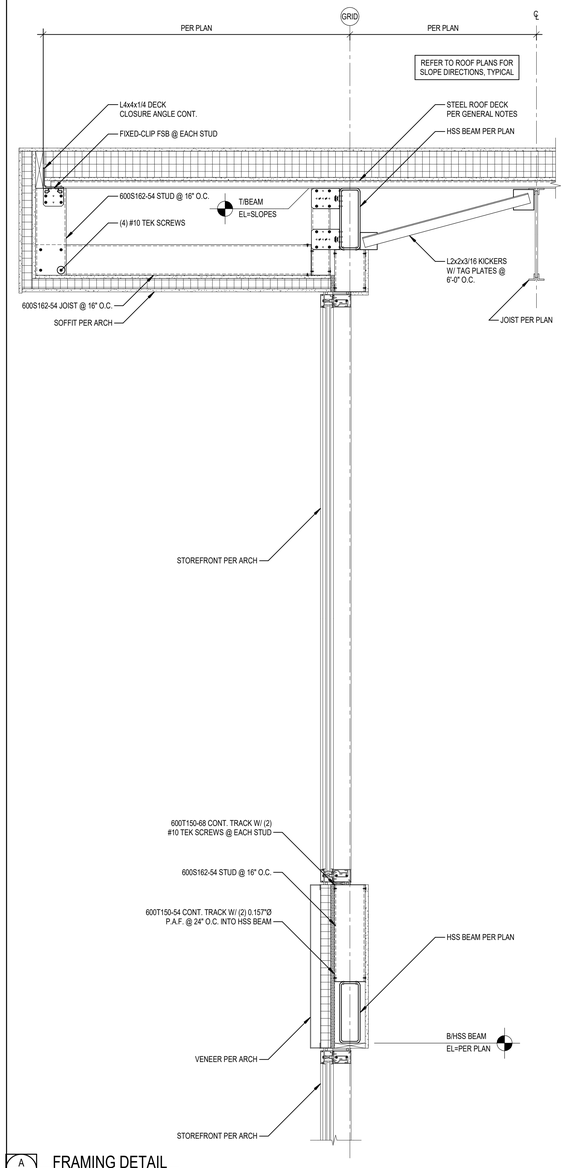

A S404 FRAMING DETAIL
Scale: 1" = 1'-0"

NIXA POLICE DEPARTMENT

NORTH LEEANN DRIVE
NIXA, MO 65714

INSIGHT DESIGN IDeA ARCHITECTS
112 S. Main St., Nixa, MO 65714 Ph: 417-724-8553

CJD engineering | Energy | Innovation

olsson

METTEMEYER ENGINEERING LLC

Chiodini ARCHITECTS
Architecture / Interior Design / Graphics
1401 S. Brentwood Blvd. | Suite 570 | St. Louis, Missouri 63144
314-725-0888 | arch@chiodini.com

Reissue Date

Professional of Record

STATE OF MISSOURI
ALAN R. METTEMEYER
NUMBER E-2000182147
6-10-25
PROFESSIONAL ENGINEER

DATE

Copyright 2024 ©
These prints are the property of the architect and shall be usedonly for the project referenced above

Engineers & Detailers
BH, DD, LH, MH

Project #
24-0168

Date
06.10.2025

Drawing Title:
FRAMING DETAILS

Sheet:
S404

PRINTED: 6/10/2025 1:58:32 PM

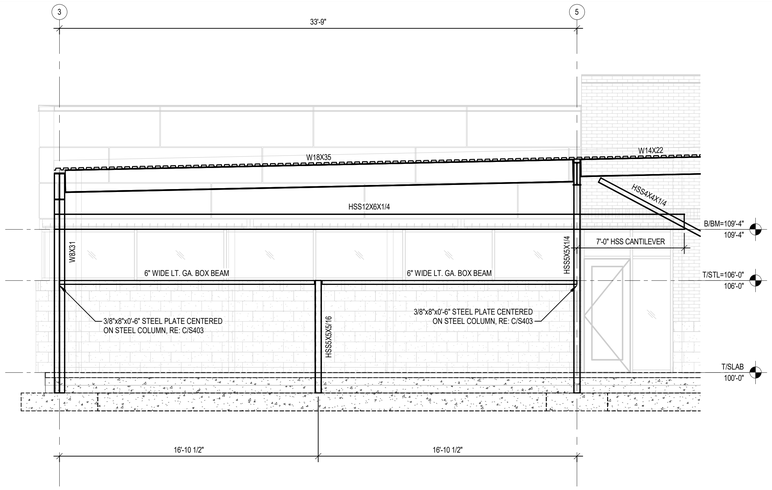

J S501 ELEV OF STRUCTURE SUPPORTED BY GRID LINE A COLUMNS
Scale: 1/4" = 1'-0"

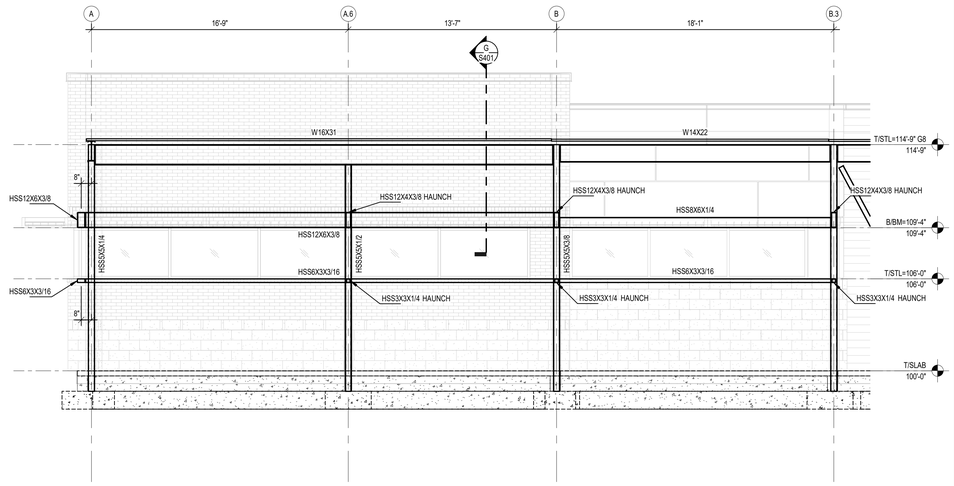

H S501 ELEV OF STRUCTURE SUPPORTED BY GRID LINE 8 COLUMNS
Scale: 1/4" = 1'-0"

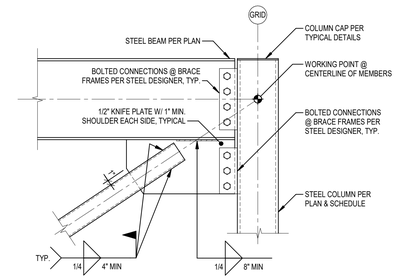

G S501 BRACED FRAME DETAIL
Scale: 1" = 1'-0"

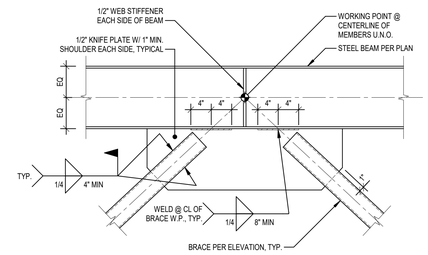

F S501 BRACED FRAME DETAIL
Scale: 1" = 1'-0"

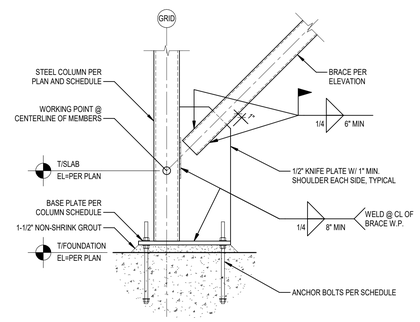

E S501 BRACED FRAME DETAIL
Scale: 1" = 1'-0"

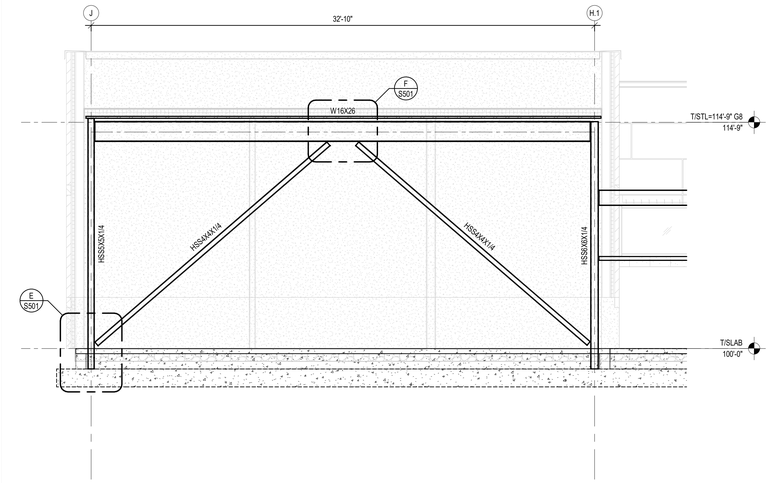

C S501 BRACED FRAME ELEVATION ALONG GRID LINE 9
Scale: 1/4" = 1'-0"

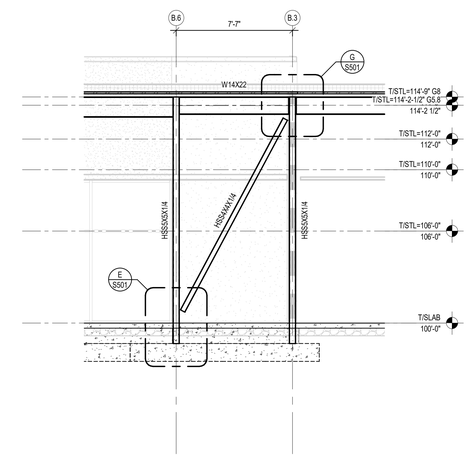

B S501 BRACED FRAME ELEVATION ALONG GRID LINE 8
Scale: 1/4" = 1'-0"

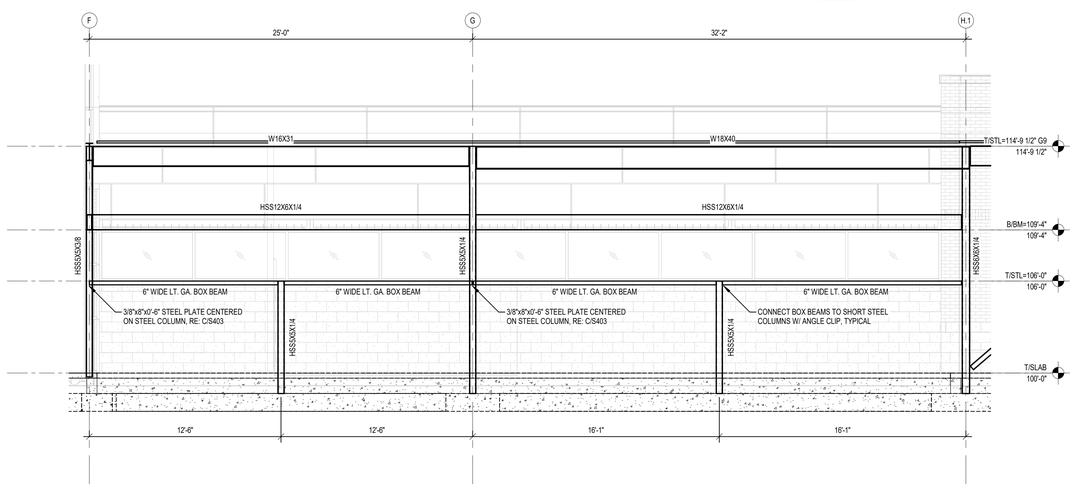

D S501 ELEV OF STRUCTURE SUPPORTED BY GRID LINE 8.7 COLUMNS
Scale: 1/4" = 1'-0"

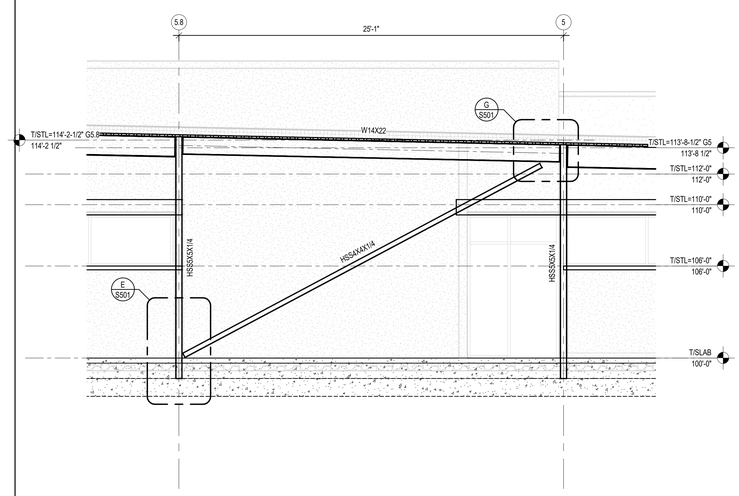

A S501 BRACED FRAME ELEVATION ALONG GRID LINE A
Scale: 1/4" = 1'-0"

PRINTED: 6/10/2025 1:58:37 PM

NIXA POLICE DEPARTMENT

NORTH LEEANN DRIVE
NIXA, MO 65714

INSIGHT DESIGN IDeA ARCHITECTS
112 S. Main St., Nixa, MO 65714 Ph: 417-724-8553

CJD engineering | Energy | Innovation

olsson

METTEMEYER ENGINEERING LLC

Christini ARCHITECTS
Architecture / Interior Design / Graphics
1401 S. Brentwood Blvd. / Suite 875 / St. Louis, Missouri 63144
314-726-5060 / arch@christini.com

Reissue Date

Professional of Record

STATE OF MISSOURI
ALAN R. METTEMEYER
NUMBER E-2000162147
6-10-25
PROFESSIONAL ENGINEER

DATE _____

Copyright 2024 ©
These prints are the property of the architect and shall be usedonly for the project referenced above

Engineers & Detailers
BH, DD, LH, MH

Project #
24-0168

Date
06.10.2025

Drawing Title:
BRACED FRAME ELEVATIONS

Sheet:
S501

KEYPLAN:

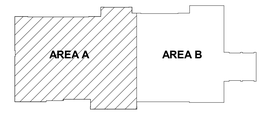

KEYNOTES:

P1	4" WASTE UP TO FINISH GRADE CLEANOUT.
P2	4" WASTE UP TO FINISH WALL CLEANOUT.
P3	REFER TO CIVIL DRAWINGS FOR CONTINUATION.
P4	2" WASTE UP TO LAVATORY/SINK.
P5	2" TRAPPED WASTE UP TO FLOOR DRAIN.
P6	4" WASTE UP TO WATER CLOSET. 2" WASTE UP TO SINK.
P7	3" TRAPPED WASTE UP TO MOP BASIN.
P8	2" WASTE UP TO DRINKING FOUNTAIN.
P9	4" WASTE UP TO WATER CLOSET. 2" WASTE UP TO URINAL.
P10	4" WASTE UP TO (2) WALL-MOUNTED FLUSH-VALVE WATER CLOSETS.
P11	1.5" VENT UP.
P12	4" WASTE UP TO FINISH WALL CLEANOUT. 2" WASTE UP TO DRINKING FOUNTAIN.
P13	2" VENT UP.
P19	4" WASTE UP TO FINISH FLOOR CLEANOUT.
P21	0.5" HOT AND 0.75" COLD WATER AND 2" VENT AND WASTE UP TO SINK. EXTEND FLEXIBLE PIPING TO ICE MAKER AND DISHWASHER AS REQUIRED.
P22	0.5" HOT AND COLD WATER UP.
P25	CONNECT 1.5" ISLAND VENT ON TOP OF 2" SINK WASTE.
P47	0.75" COLD WATER UP. REFER TO PLUMBING PLAN FOR CONTINUATION.
P48	0.75" COLD WATER UP TO FREEZE-PROOF YARD HYDRANT.
P51	4" WASTE UP TO FINISH GRADE CLEANOUT. MAINTAIN A MINIMUM INVERT ELEVATION OF 24" BELOW FINISH FLOOR TO ACCOMMODATE FUTURE EXPANSION.
P57	4" PRIMARY ROOF DRAIN UP TO FINISH GRADE CLEANOUT. MAINTAIN A MINIMUM INVERT ELEVATION OF 24" BELOW FINISH FLOOR TO ACCOMMODATE FUTURE EXPANSION.
P74	6" PRIMARY ROOF DRAIN LEADER UP.

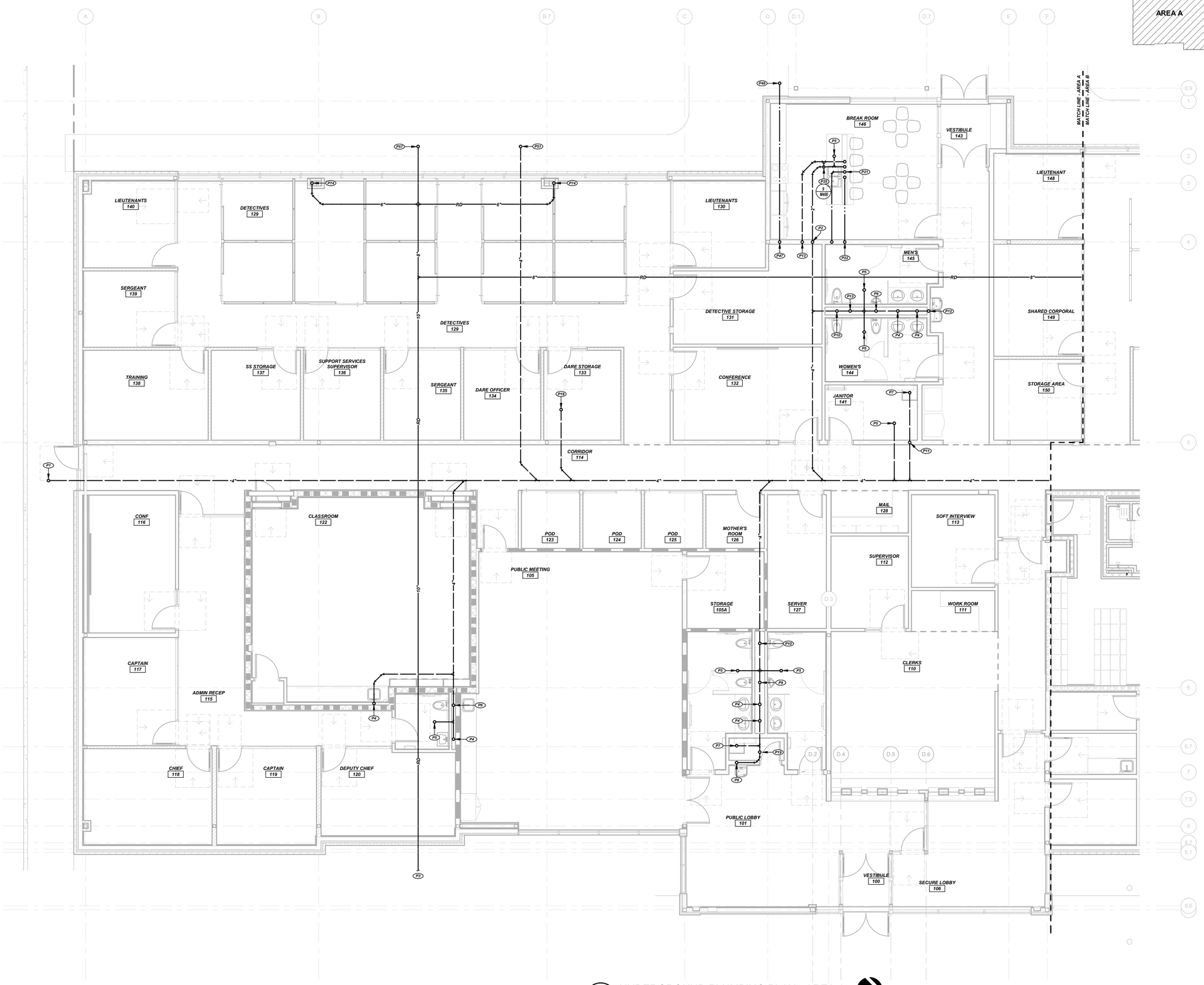

1 UNDERGROUND PLUMBING PLAN - AREA A
3/16" = 1'-0"

NORTH

PRINTED: 6/10/2025 3:50:32 PM

NIXA POLICE DEPARTMENT

NORTH LEEANN DRIVE
NIXA, MO 65714

INSIGHT DESIGN IDeA ARCHITECTS
112 S. Main St., Nixa, MO 65714 Ph: 417-724-8553

CJD engineering | Energy | innovation

olsson

METTEMEYER ENGINEERING LLC

Christini ARCHITECTS
Architecture / Interior Design / Graphics
1401 S. Brentwood Blvd. / Suite 975 / St. Louis, Missouri 63144
314-725-5085 / acris@christini.com

Reissue Date

Professional of Record

STATE OF MISSOURI
ALLEN DAVIS NUMBER PE-2004017155
PROFESSIONAL ENGINEER

DATE 06.10.2025

Copyright 2025 ©
These prints are the property of the architect and shall be used only for the project referenced above

Drawn
ZTP

Project #
24-003

Date
2025.06.10

Drawing Title:
UNDERSLAB PLUMBING PLAN - AREA A

Sheet:
M101

CJD
Engineering | Energy | Innovation
2225 West Chesterfield Boulevard, Suite 200, Springfield, MO 65807
P: 417.877.1700 F: 417.324.7735 www.cjd-eng.com
Missouri State Certificate of Authority #200502690366

Special Notice: Drawings prepared by CJD Engineering LLC are instruments of service for use solely with respect to this project. All rights including copyright are retained by CJD Engineering LLC and the owner of the building or structure that is the subject of this drawing shall not be reused in part or in full for any other work without prior written consent by and appropriate compensation to CJD Engineering LLC. Whoever changes the design without prior written approval from CJD Engineering LLC, does so at their own risk and assumes full responsibility for any damages, liabilities or costs resulting directly or indirectly from such changes to the fullest extent of the law.

KEYPLAN:

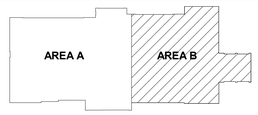

KEYNOTES:

P3	REFER TO CIVIL DRAWINGS FOR CONTINUATION.
P4	2" WASTE UP TO LAVATORY/SINK.
P5	2" TRAPPED WASTE UP TO FLOOR DRAIN.
P8	2" WASTE UP TO DRINKING FOUNTAIN.
P11	1.5" VENT UP.
P13	2" VENT UP.
P15	2" TRAPPED WASTE UP TO TRENCH DRAIN.
P18	2" TRAPPED WASTE UP TO EMERGENCY EYE-WASH.
P19	4" WASTE UP TO FINISH FLOOR CLEANOUT.
P41	2.5" DOMESTIC WATER SERVICE UP.
P49	4" WASTE UP TO TRENCH DRAIN.
P50	4" WASTE UP TO SAMPLING MANHOLE.
P51	4" WASTE UP TO FINISH GRADE CLEANOUT. MAINTAIN A MINIMUM INVERT ELEVATION OF 24" BELOW FINISH FLOOR TO ACCOMMODATE FUTURE EXPANSION.
P57	4" PRIMARY ROOF DRAIN UP TO FINISH GRADE CLEANOUT. MAINTAIN A MINIMUM INVERT ELEVATION OF 24" BELOW FINISH FLOOR TO ACCOMMODATE FUTURE EXPANSION.
P61	4" WASTE UP TO FINISH GRADE CLEANOUT. MAINTAIN A MINIMUM INVERT ELEVATION OF 36" BELOW FINISH GRADE.
P65	4" WASTE UP TO WALL CAVITY. REFER TO PLUMBING ISOMETRIC FOR CONTINUATION.
P67	6" FIRE SERVICE SHOWN FOR REFERENCE ONLY. REFER TO CIVIL DRAWINGS FOR CONTINUATION. SIZE AND DETAILING BY FIRE SPRINKLER CONTRACTOR/ENGINEER.
P68	FIRE SERVICE UP. SIZE AND DETAILING BY FIRE SPRINKLER CONTRACTOR/ENGINEER.
P74	6" PRIMARY ROOF DRAIN LEADER UP.

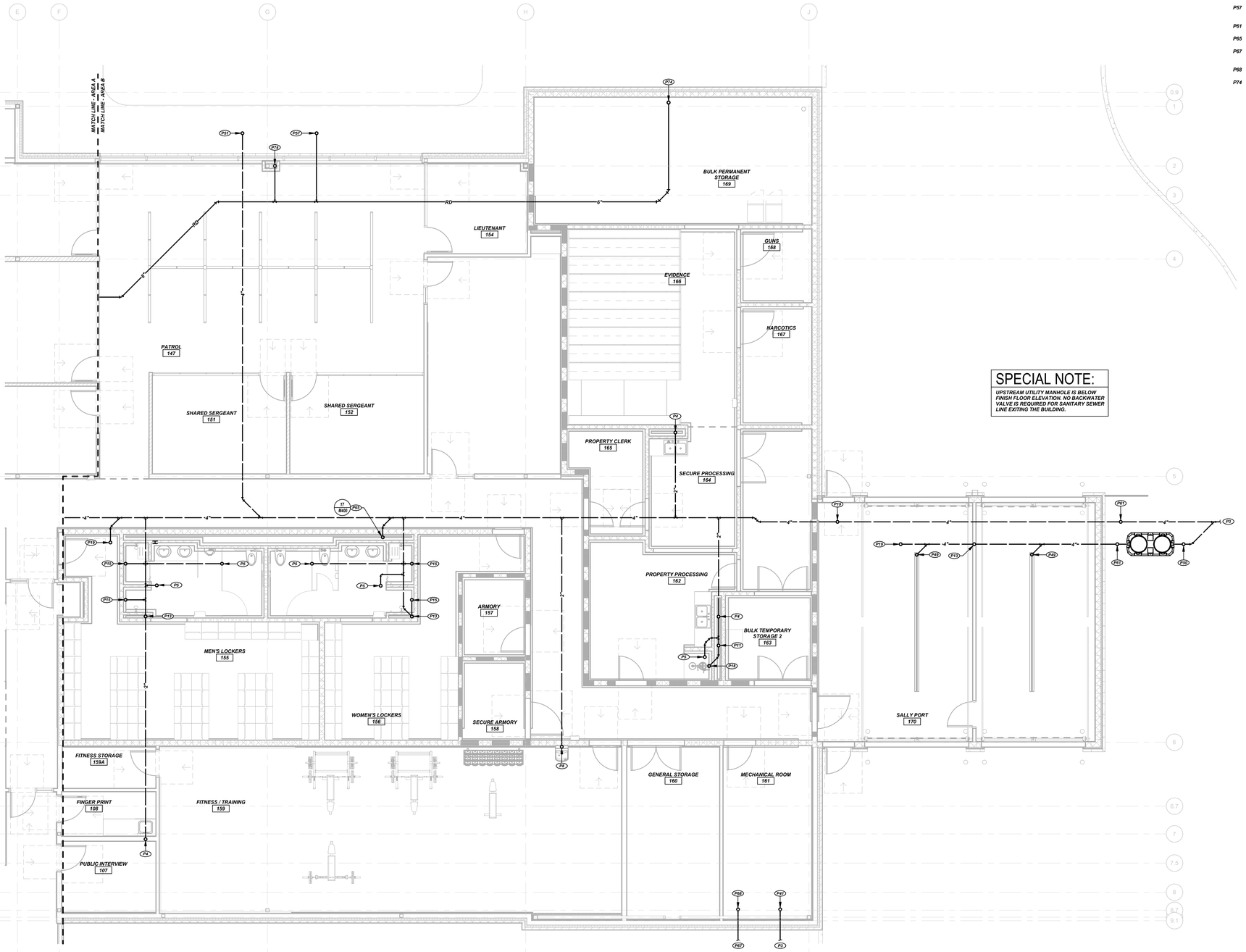

SPECIAL NOTE:

UPSTREAM UTILITY MANHOLE IS BELOW FINISH FLOOR ELEVATION. NO BACKWATER VALVE IS REQUIRED FOR SANITARY SEWER LINE EXITING THE BUILDING.

1 UNDERGROUND PLUMBING PLAN - AREA B
3/16" = 1'-0"
NORTH

NIXA POLICE DEPARTMENT

NORTH LEEANN DRIVE
NIXA, MO 65714

INSIGHT DESIGN IDeA ARCHITECTS
112 S. Main St., Nixa, MO 65714 Ph: 417-724-8553

CJD Engineering | Energy | Innovation
olsson

METTEMEYER ENGINEERING LLC

Chiodini ARCHITECTS
Architecture / Interior Design / Graphics
1401 S. Brentwood Blvd. / Suite 575 / St. Louis, Missouri 63144
314-725-5088 / arch@chiodini.com

Reissue Date

Professional of Record

STATE OF MISSOURI
ALLEN DAVIS
NUMBER
PE-2004017155
PROFESSIONAL ENGINEER

DATE 06.10.2025

Copyright 2025 ©
These prints are the property of the architect and shall be used only for the project referenced above

Drawn
ZTP

Project #
24-003

Date
2025.06.10

Drawing Title:
UNDERSLAB PLUMBING PLAN - AREA B

Sheet:
M102

CJD
Engineering | Energy | Innovation
2225 West Chesterfield Boulevard, Suite 200, Springfield, MO 65807
P: 417.877.1700 F: 417.324.7735 www.cjd-eng.com
Missouri State Certificate of Authority #200502690366

Special Notice: Drawings prepared by CJD Engineering LLC are instruments of service for use solely with respect to this project. CJD Engineering LLC retains ownership and all common law, statutory law and other reserved rights including copyrights. This drawing shall not be reused in part or in full for any other work without prior written consent by and appropriate compensation to CJD Engineering LLC. Whosoever changes the design without prior written approval from CJD Engineering LLC, does so at their own risk and assumes full responsibility for any damages, liabilities or costs resulting directly or indirectly from such changes to the fullest extent of the law.

PRINTED: 6/10/2025 3:45:27 PM

KEYPLAN:

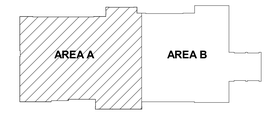

KEYNOTES:

P13	2" VENT UP.
P20	1.25" HOT AND COLD WATER DOWN TO WATER HEATER.
P23	0.5" HOT AND 0.75" COLD WATER DOWN.
P24	2" VENT DOWN.
P26	2" VENT UP TO 3" VENT THROUGH ROOF.
P29	0.5" COLD WATER AND 1.5" VENT DOWN TO DRINKING FOUNTAIN.
P31	0.5" HOT AND COLD WATER AND 1.5" VENT DOWN TO SINK/LAVATORY.
P32	0.5" HOT WATER, 1.5" COLD WATER AND 2" VENT DOWN. EXTEND 0.5" HOT AND COLD WATER TO SINK AND 1.25" COLD WATER TO WATER CLOSET.
P33	0.5" HOT AND COLD WATER DOWN TO MOP BASIN.
P35	1.5" COLD WATER AND 2" VENT DOWN. EXTEND 1.25" COLD WATER TO WATER CLOSET AND 0.75" COLD WATER TO URINAL.
P37	1.5" VENT DOWN.
P44	0.5" COLD WATER DOWN TO ICE-MAKER BOX.
P45	0.75" COLD WATER DOWN TO FREEZE-PROOF WALL HYDRANT.
P46	0.75" COLD WATER DOWN. REFER TO UNDERSLAB PLAN FOR CONTINUATION.
P52	2" COLD WATER WITH SHUT-OFF VALVE CAPPED FOR PHASE 2 FUTURE ADDITIONS.
P53	1" HOT AND 2" COLD WATER DOWN INTO WALL CAVITY. REFER TO ISOMETRIC FOR CONTINUATION.
P60	ROUTE HOT AND COLD WATER, RECIRC AND VENT PIPING UP TO AVOID HIGH CEILING IN THIS AREA.
P63	0.5" HOT WATER RECIRC DOWN. REFER TO WATER HEATER DETAIL FOR CONTINUATION.
P71	6" PRIMARY ROOF DRAIN LEADER DOWN.
P72	6" SECONDARY ROOF DRAIN LEADER UP TO SECONDARY ROOF DRAIN.
P73	8" SECONDARY ROOF DRAIN LEADER DOWN TO DOWNSPOUT NOZZLE AT 18" AFF.
P75	6" PRIMARY ROOF DRAIN LEADER UP TO PRIMARY ROOF DRAIN.

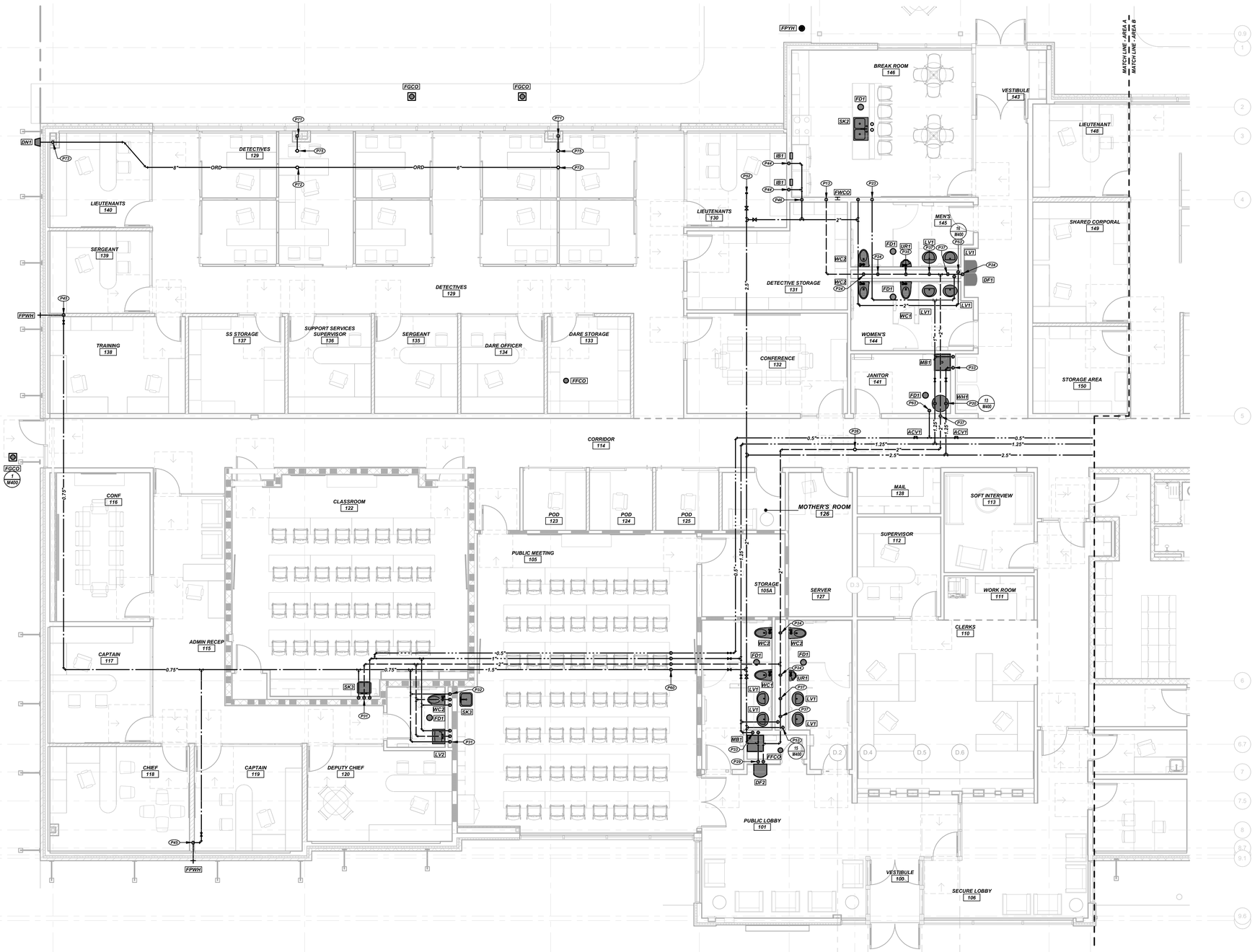

1 PLUMBING PLAN - AREA A
3/16" = 1'-0"

NORTH

PRINTED: 6/10/2025 3:50:40 PM

NIXA POLICE DEPARTMENT

NORTH LEEANN DRIVE
NIXA, MO 65714

INSIGHT DESIGN IDeA ARCHITECTS
112 S. Main St., Nixa, MO 65714 Ph: 417-724-8553

CJD engineering | Energy | innovation

olsson

METTEMEYER ENGINEERING LLC

Chiodini ARCHITECTS
Architecture / Interior Design / Graphics
1401 S. Brentwood Blvd. / Suite 975 / St. Louis, Missouri 63144
314-725-5085 / archi@chiodini.com

Reissue Date

Professional of Record

STATE OF MISSOURI
ALLEN J. DAVIS
NUMBER
PE-2004017155
PROFESSIONAL ENGINEER

DATE 06.10.2025

Copyright 2025 ©
These prints are the property of the architect and shall be used only for the project referenced above

Drawn
ZTP

Project #
24-003

Date
2025.06.10

Drawing Title:
PLUMBING PLAN - AREA A

Sheet:
M103

CJD
Engineering | Energy | Innovation
2225 West Chesterfield Boulevard, Suite 200, Springfield, MO 65807
P: 417.877.1700 F: 417.324.7735 www.cjd-eng.com
Missouri State Certificate of Authority #200502690366

Special Notice: Drawings prepared by CJD Engineering LLC are instruments of service for use solely with respect to this project. All ideas, designs, arrangements and plans indicated or represented by these drawings are owned by and the property of CJD Engineering LLC, including copyrights. This drawing shall not be reused in part or in full for any other work without prior written consent by and appropriate compensation to CJD Engineering LLC. Whoever changes the design without prior written approval from CJD Engineering LLC, does so at their own risk and assumes full responsibility for any damages, liabilities or costs resulting directly or indirectly from such changes to the fullest extent of the law.

KEYPLAN:

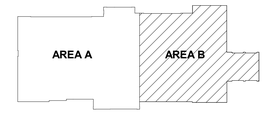

KEYNOTES:

P26	2" VENT UP TO 3" VENT THROUGH ROOF.
P28	0.5" HOT AND COLD WATER DOWN TO SHOWER. 2" VENT DOWN.
P29	0.5" COLD WATER AND 1.5" VENT DOWN TO DRINKING FOUNTAIN.
P31	0.5" HOT AND COLD WATER AND 1.5" VENT DOWN TO SINK/LAVATORY.
P37	1.5" VENT DOWN.
P40	0.5" HOT AND COLD WATER DOWN TO EMERGENCY EYE-WASH.
P42	2.5" DOMESTIC WATER SERVICE DOWN WITH SHUT-OFF VALVE. REFER TO UNDERSLAB PLAN FOR CONTINUATION.
P43	2.5" DOMESTIC WATER SERVICE DOWN TO SHUT-OFF VALVE, PRESSURE REDUCING VALVE AND BACKFLOW PREVENTER.
P45	0.75" COLD WATER DOWN TO FREEZE-PROOF WALL HYDRANT.
P52	2" COLD WATER WITH SHUT-OFF VALVE CAPPED FOR PHASE 2 FUTURE ADDITIONS.
P66	2" VENT DOWN IN WALL CAVITY. REFER TO WASTE/VENT ISOMETRIC FOR CONTINUATION.
P70	5" STORZ FIRE DEPARTMENT CONNECTION SHOWN FOR REFERENCE ONLY. LOCATION SUBJECT TO APPROVAL BY AHJ. SIZE AND DETAILING BY FIRE SPRINKLER CONTRACTOR/ENGINEER.
P71	6" PRIMARY ROOF DRAIN LEADER DOWN.
P72	6" SECONDARY ROOF DRAIN LEADER UP TO SECONDARY ROOF DRAIN.
P73	6" SECONDARY ROOF DRAIN LEADER DOWN TO DOWNSPOUT NOZZLE AT 18" AFF.
P75	6" PRIMARY ROOF DRAIN LEADER UP TO PRIMARY ROOF DRAIN.
P76	0.75" HOT AND 2" COLD WATER DOWN INTO WALL CAVITY. REFER TO ISOMETRIC FOR CONTINUATION.

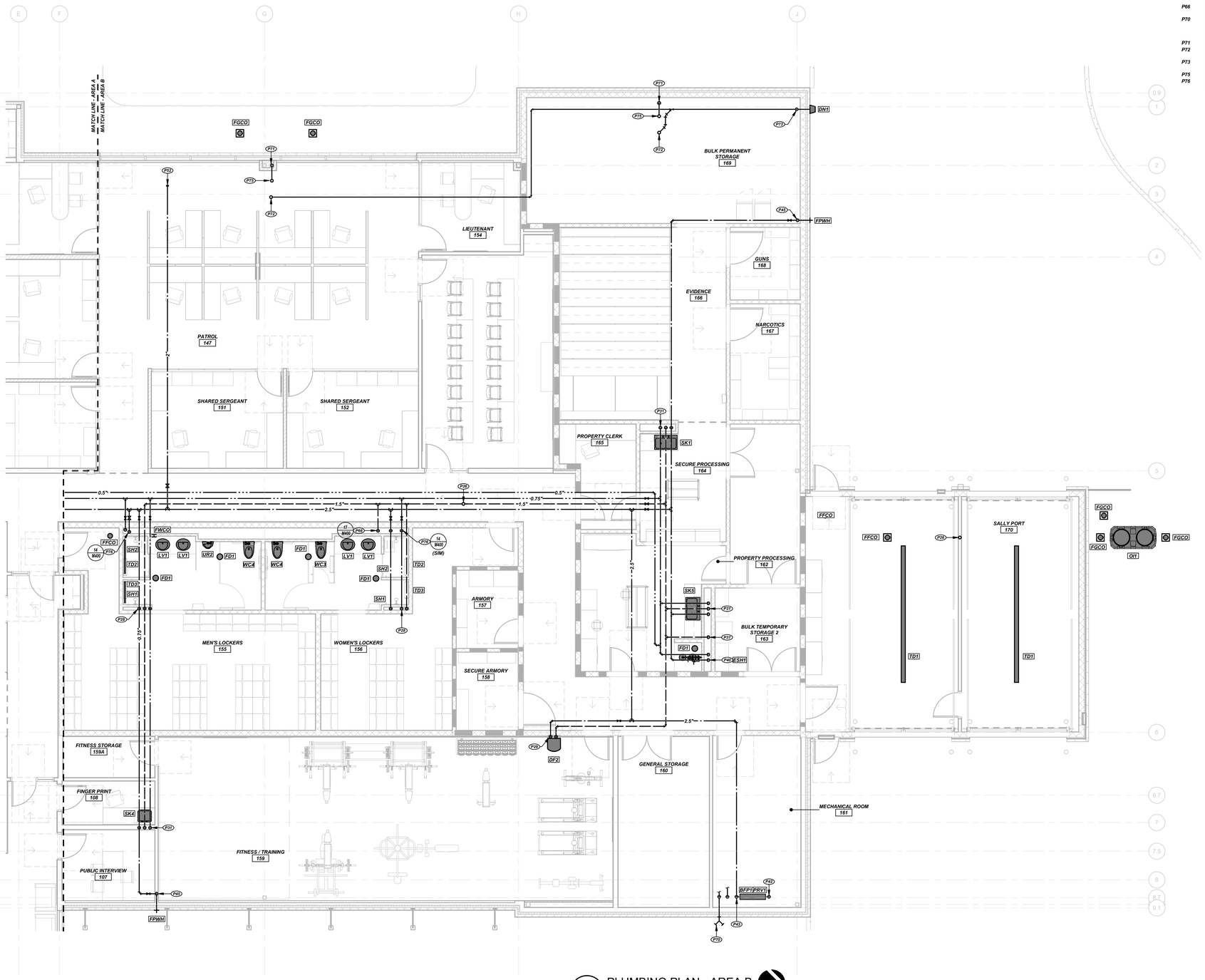

1 PLUMBING PLAN - AREA B

3/16" = 1'-0"

NORTH

NIXA POLICE DEPARTMENT

NORTH LEEANN DRIVE
NIXA, MO 65714

INSIGHT DESIGN IDeA ARCHITECTS
112 S. Main St., Nixa, MO 65714 Ph: 417-724-8553

CJD engineering | Energy | innovation

olsson

METTEMEYER ENGINEERING LLC

Chiodini ARCHITECTS
Architecture / Interior Design / Graphics
1401 S. Brentwood Blvd. / Suite 570 / St. Louis, Missouri 63144
314-725-5888 art@chiodini.com

Reissue Date

Professional of Record

STATE OF MISSOURI
ALLEN W. DAVIS
NUMBER PE-2004017155
PROFESSIONAL ENGINEER

DATE 06.10.2025

Copyright 2025 ©

These prints are the property of the architect and shall be used only for the project referenced above

Drawn: ZTP

Project #: 24-003

Date: 2025.06.10

Drawing Title: PLUMBING PLAN - AREA B

Sheet: M104

CJD
Engineering | Energy | Innovation
2225 West Chesterfield Boulevard, Suite 200, Springfield, MO 65807
P: 417.877.1700 F: 417.324.7735 www.cjd-eng.com
Missouri State Certificate of Authority #2005022690366

Special Notice: Drawings prepared by CJD Engineering LLC are instruments of service for use solely with respect to this project. CJD Engineering LLC retains ownership and all common law, statutory law and other reserved rights including copyrights. This drawing shall not be reused in part or in full for any other work without prior written consent by and appropriate compensation to CJD Engineering LLC. Whoever re-drafts the design without prior written approval from CJD Engineering LLC, does so at their own risk and assumes full responsibility for any damages, liabilities or costs resulting directly or indirectly from such changes to the fullest extent of the law.

PRINTED: 6/10/2025 3:45:40 PM

KEYPLAN:

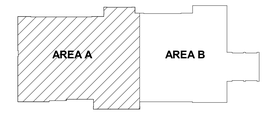

KEYNOTES:

M1 48"X24" PRIMARY AIR DUCT AND 66"X16" RETURN DUCT UP TO RTU1 ON ROOF. TRANSITION TO UNIT OPENINGS AND PROVIDE AND FLEXIBLE CONNECTIONS. FIELD VERIFY EXACT LOCATION AND REQUIREMENTS.

M2 RETURN AIR DUCT OPEN TO PLENUMROOM.

M3 24"X20" EXHAUST/RELIEF AIR DUCT UP TO RTU1 ON ROOF. PROVIDE TRANSITION AND FLEXIBLE CONNECTION. FIELD VERIFY EXACT LOCATION.

M4 INTERNALLY LINED TRANSFER AIR BOOT FULL SIZE OF GRILLE NECK, ROUTE THRU CORRIDOR WALL.

M5 INTERNALLY LINED TRANSFER BOOT IN WALL ABOVE CEILING, REFER TO PLAN FOR SIZE.

M6 PRIMARY AIR AND EXHAUST AIR DUCTS FOR FUTURE ADDITION. CAP DUCTS AT EXTERIOR WALL AND CLOSE BALANCING DAMPERS.

M11 0.5" PUMPED CONDENSATE DOWN TO MINI-SPILT AIR HANDLER/FAN COIL UNIT.

M13 DISCHARGE 0.75" CONDENSATE AT MOP BASIN.

M14 ROUTE CONDENSATE AND REFRIGERANT LIQUID/SUCTION PIPING TIGHT TO TOP OF WALL.

M15 EQUIPMENT SHALL BE ACCESSIBLE FROM ADJACENT GRID CEILING.

M17 10" EXHAUST DUCT UP TO EXHAUST FAN ON ROOF. FIELD VERIFY EXACT LOCATION AND REQUIREMENTS.

M18 10" OUTSIDE AIR DUCT UP TO GRAVITY VENTILATOR ON ROOF. FIELD VERIFY EXACT LOCATION AND REQUIREMENTS. MOTORIZED DAMPER TO OPEN WHEN EXHAUST FAN "EF5" IS IN OPERATION. COORDINATE EXACT REQUIREMENTS WITH ELECTRICAL CONTRACTOR.

M21

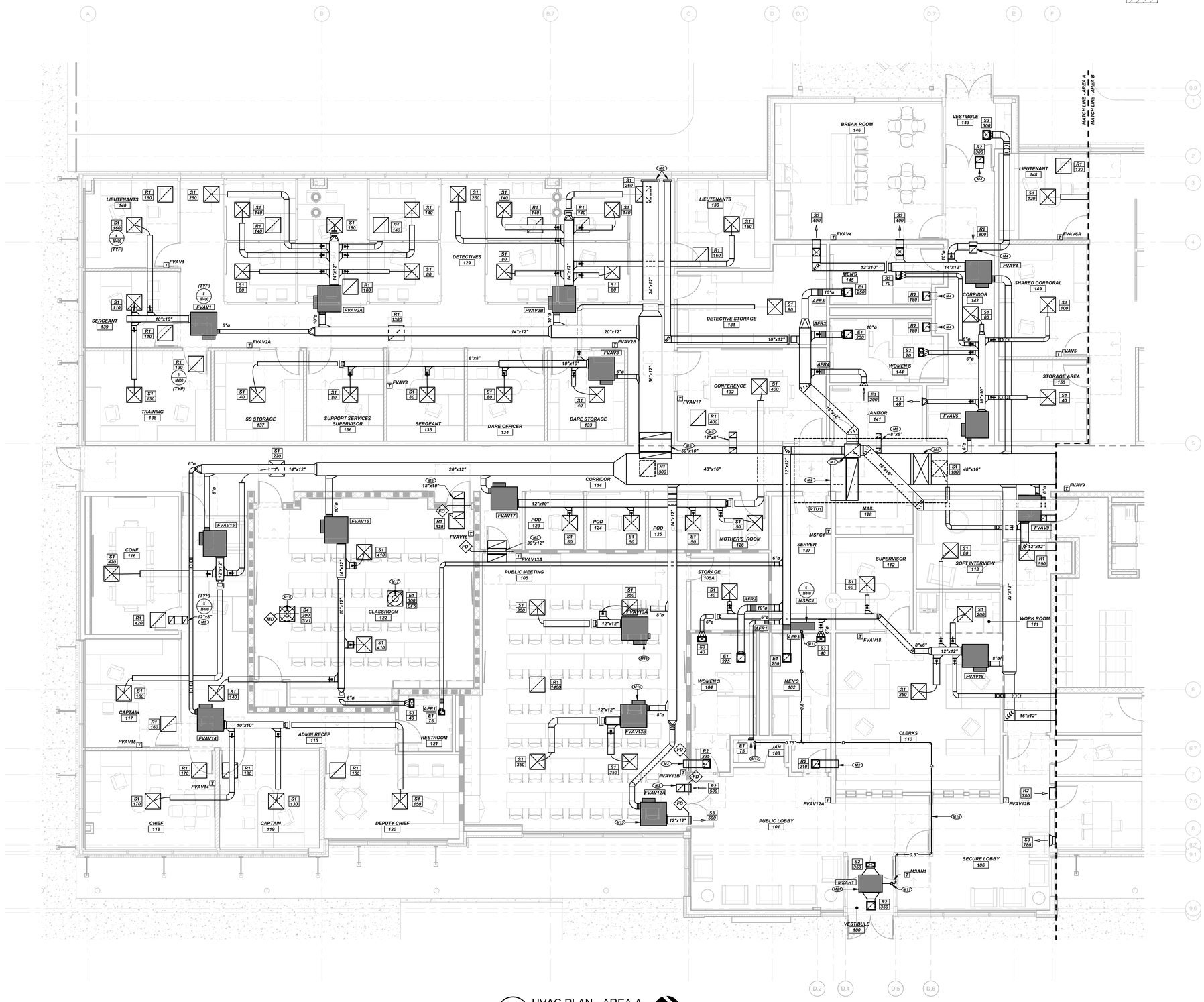

1 HVAC PLAN - AREA A
3/16" = 1'-0"
NORTH

PRINTED: 6/10/2025 3:21:20 PM

NIXA POLICE DEPARTMENT

NORTH LEEANN DRIVE
NIXA, MO 65714

INSIGHT DESIGN IDeA ARCHITECTS
112 S. Main St., Nixa, MO 65714 Ph: 417-724-8553

CJD engineering | Energy | innovation

olsson

METTEMEYER ENGINEERING LLC

Christini ARCHITECTS
Architecture / Interior Design / Graphics
1401 S. Brentwood Blvd. | Suite 570 | St. Louis, Missouri 63144
314-725-0888 | art@c-ladder.com

Reissue Date

Professional of Record

STATE OF MISSOURI
ALLEN W. DAVIS
NUMBER PE-2004017155
PROFESSIONAL ENGINEER

DATE 06.10.2025

Copyright 2025 ©

These prints are the property of the architect and shall be used only for the project referenced above

Drawn
QCJ

Project #
24-003

Date
2025.06.10

Drawing Title:
HVAC PLAN - AREA A

Sheet:
M201

CJD
Engineering | Energy | Innovation
2225 West Chesterfield Boulevard, Suite 200, Springfield, MO 65807
P: 417.877.1700 F: 417.324.7735 www.cjd-eng.com
Missouri State Certificate of Authority #2005022690366

Special Notice: Drawings prepared by CJD Engineering LLC are instruments of service for use solely with respect to this project. CJD Engineering LLC retains ownership and all common law, statutory law and other reserved rights including copyrights. This drawing shall not be reused in part or in full for any other work without prior written consent by and appropriate compensation to CJD Engineering LLC. Whoever re-uses or changes the design without prior written approval from CJD Engineering LLC, does so at their own risk and assumes full responsibility for any damages, liabilities or costs resulting directly or indirectly from such changes to the fullest extent of the law.

KEYPLAN:

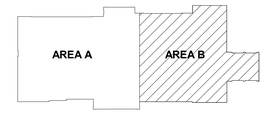

KEYNOTES:

M2 RETURN AIR DUCT OPEN TO PLENUM/ROOM.

M5 INTERNALLY LINED TRANSFER BOOT IN WALL ABOVE CEILING, REFER TO PLAN FOR SIZE.

M6 PRIMARY AIR AND EXHAUST AIR DUCTS FOR FUTURE ADDITION. CAP DUCTS AT EXTERIOR WALL AND CLOSE BALANCING DAMPERS.

M10 12"X12" EXHAUST DUCT UP TO EXHAUST FAN ON ROOF. FIELD VERIFY EXACT LOCATION AND REQUIREMENTS.

M16 CONNECT 8" EXHAUST DUCT TO LOCKER SYSTEM. FIELD COORDINATE EXACT LOCATION AND REQUIREMENTS WITH LOCKER SUPPLIER. BALANCING CONTRACTOR SHALL COORDINATE AIRFLOW REQUIREMENTS WITH LOCKER SUPPLIER.

M19 MOTORIZED DAMPER TO OPEN WHEN EXHAUST FAN "EF2" IS IN OPERATION. COORDINATE EXACT REQUIREMENTS WITH ELECTRICAL CONTRACTOR.

M20 MOTORIZED DAMPER TO OPEN WHEN EXHAUST FAN "EF3" IS IN OPERATION. COORDINATE EXACT REQUIREMENTS WITH ELECTRICAL CONTRACTOR.

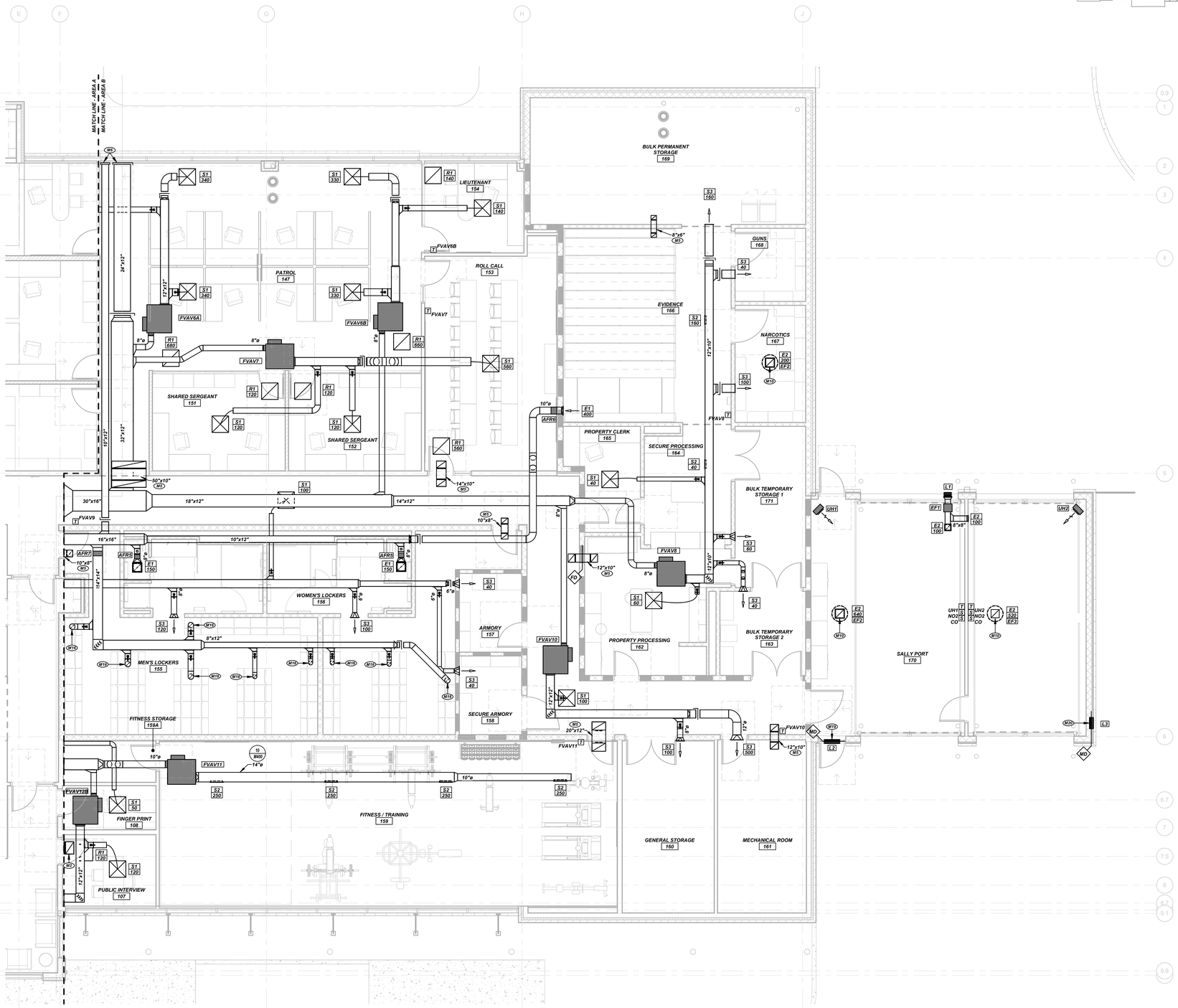

1 HVAC PLAN - AREA B
3/16" = 1'-0"
NORTH

NIXA POLICE DEPARTMENT

NORTH LEEANN DRIVE
NIXA, MO 65714

INSIGHT DESIGN IDeA ARCHITECTS
112 S. Main St., Nixa, MO 65714 Ph: 417-724-8553

CJD engineering | Energy | Innovation

olsson

METTEMEYER ENGINEERING LLC

Chiodini ARCHITECTS
Architecture / Interior Design / Graphics
1401 S. Brentwood Blvd. / Suite 275 / St. Louis, Missouri 63144
314-725-5888 / arch@chiodini.com

Reissue Date

Professional of Record

STATE OF MISSOURI
ALLEN DAVIS
NUMBER PE-2004017155
PROFESSIONAL ENGINEER

DATE 06.10.2025

Copyright 2025 ©

These prints are the property of the architect and shall be used only for the project referenced above

Drawn: QCJ

Project #: 24-003

Date: 2025.06.10

Drawing Title: HVAC PLAN - AREA B

Sheet: M202

CJD
Engineering | Energy | Innovation
2225 West Chesterfield Boulevard, Suite 200, Springfield, MO 65807
P: 417.877.1700 F: 417.324.7735 www.cjd-eng.com
Missouri State Certificate of Authority #200502690366

Special Notice: Drawings prepared by CJD Engineering LLC are instruments of service for use solely with respect to this project. CJD Engineering LLC retains ownership and all common law, statutory law and other reserved rights including copyrights. This drawing shall not be reused in part or in full for any other work without prior written authorization from CJD Engineering LLC. Reproduction of this drawing in part or whole or conveyance to others without prior written approval from CJD Engineering LLC, does so at their own risk and assumes full responsibility for any damages, liabilities or costs resulting directly or indirectly from such changes to the fullest extent of the law.

PRINTED: 6/10/2025 3:21:26 PM

WATER HEATER SCHEDULE

MARK	MANUFACTURER	MODEL #	TYPE	GALLON CAPACITY	RECOVERY GPH @ 100F	%AFUE	KW	VOLTAGE/ PHASE	ACCESSORIES
WH1	BRADFORD WHITE	CEHD50A153*CF	ELEC	50	62	-	15	208/3	1,2,3,4,5

ACCESSORIES:
1. THERMAL EXPANSION TANK EQUIVALENT TO AMTROL MODEL ST-12
2. DRAIN VALVE WITH THREADED HOSE CONNECTION
3. PRESSURE & TEMPERATURE RELIEF VALVE
4. DRAIN PAN.
5. 415-51043-130 VOLTAGE CONVERSION KIT.

PIPING INSULATION SCHEDULE

SERVICE	SIZE	TYPE	INSULATION THICKNESS	LOCATION	NOTES
CONDENSATE PIPING	0.5"-1.25"	ELASTOMERIC	0.5"	INTERIOR	2,5
DOMESTIC COLD WATER	0.5"-1.25"	ELASTOMERIC	0.5"	INTERIOR	1,2
DOMESTIC HOT WATER	0.5"-1.25"	ELASTOMERIC	1"	INTERIOR	1
REFRIGERANT SUCTION LINES	ALL SIZES	ELASTOMERIC	0.5"	INTERIOR	1,5
REFRIGERANT SUCTION LINES	ALL SIZES	ELASTOMERIC	0.5"	EXTERIOR	1,5
REFRIGERANT HOT GAS/DISCHARGE	ALL SIZES	ELASTOMERIC	0.75"	INTERIOR	1,4,5
ROOF DRAIN PIPING (FROM ROOF DRAIN TO EXIT OF BUILDING - FLOOR OR WALL)	ALL SIZES	FIBERGLASS	1"	INTERIOR	2,5
ROOF DRAIN BODY	ALL SIZES	ELASTOMERIC	1"	INTERIOR	3,5

NOTES:
1. FLEXIBLE ELASTOMERIC FOAMPLASTIC, PREFORMED, ASTM C534, TYPE I, "k" = 0.28 AT 75 DEG, PLENUM RATED. ARMSTRONG AP ARMAFLEX, AEROCEL EDPM, K-FLEX LS OR APPROVED EQUAL

2. FIBERGLASS INSULATION WRAP (1.0 LB) W/ FOIL-SCRIM-KRAFT FACING, PREFORMED, ASTM C547, CLASS 1, "k" = 0.23 AT 75 DEG. KNAUF, OWENS-CORNING, CERTAINTEED OR APPROVED EQUAL.
3. FLEXIBLE ELASTOMERIC FOAMPLASTIC, SHEET MATERIAL, ASTM C534, TYPE I, "k" = 0.28 AT 75 DEG, PLENUM RATED. ARMSTRONG AP ARMAFLEX SHEET, AEROCEL EDPM SHEET, K-FLEX LS SHEET OR APPROVED EQUAL.
4. VERIFY WITH EQUIPMENT MANUFACTURER'S INSTALLATION MANUAL FOR ANY ADDITIONAL INSULATION REQUIREMENTS ABOVE AS INDICATED ON THIS SCHEDULE.
5. INSULATION SHALL COVER ALL JOINTS, FITTINGS, ETC. AND SHALL BE VAPOR TIGHT.

PIPING LOCATED OUTDOORS SHALL BE PROVIDED WITH A SMOOTH ALUMINUM JACKET WITH SEAM ON TOPSIDE OF PIPE AT 2 OR 10 O'CLOCK POSITION OF HORIZONTAL RUNS. FITTINGS SHALL HAVE FORMED ALUMINUM COVERS.

PIPING MATERIAL SCHEDULE

SYSTEM	PIPING						FITTINGS		MAXIMUM WORKING		FIELD TEST		NOTES
	SIZE	TYPE	SCHEDULE	GRADE	ASTM	MATERIAL	MATERIAL	TYPE	PRESSURE (PSI)	TEMP (DEG. F)	PRESSURE (PSI)	TIME (HOURS)	
CONDENSATE DRAIN ABOVE GRADE	ALL	-	-	-	B88	COPPER	COPPER	DR \ SJ	10 FT	40-70	10 FT	1	-
DOMESTIC WATER ABOVE GRADE	0.5"-2"	PEX	-	-	F877	PEX	BRONZE	MJ	120	40-180	150	1	2
FIRE PROTECTION	ALL	PER NFPA 13 AND FIRE SPRINKLER DRAWINGS									200	2	2
FIRE SPRINKLER SERVICE BELOW GRADE	ALL	PER NFPA 13 AND FIRE SPRINKLER DRAWINGS									200	2	-
ROOF DRAIN BELOW GRADE	ALL	DWV	40	-	2665	PVC	PVC	DR / SW	10 FT	50-180	10 FT	2	1
ROOF DRAIN ABOVE GRADE	ALL	DWV	40	-	2665	PVC	PVC	DR / SW	10 FT	50-180	10 FT	2	3
SANITARY WASTE BELOW GRADE	ALL	DWV	40	-	2665	PVC	PVC	DR \ SW	10 FT	50-180	10 FT	1	1
SANITARY WASTE AND VENT - RETURN AIR PLENUMS	ALL	NH	SS	-	A74	CI	CI	DR\NH	10 FT	50-180	10 FT	1	3
TEMPERATURE & PRESSURE RELIEF DRAIN	ALL	M	-	-	B88	COPPER	COPPER	DR \ SJ	10 FT	40-70	10 FT	1	-

NOTES:
1. THE USE OF CELLULAR CORE PVC WASTE AND VENT PIPING IS STRICTLY PROHIBITED.
2. PROVIDE FULL-PORT BRASS FITTINGS.
3. SANITARY WASTE AND VENT PIPING LOCATED WITHIN RETURN AIR PLENUMS SHALL BE CAST IRON OR SHALL BE ENCLOSED IN A GYPSUM BOARD SOFFIT.

ABBREVIATIONS:
CI - CAST IRON
CS - CARBON STEEL
CW - CONTINUOUS WELD
DI - DUCTILE IRON
DWV - DRAINAGE WASTE AND VENT
HDPE - HIGH DENSITY POLYETHYLENE
MJ - MECHANICAL JOINT
NG - NEOPRENE GASKET
NH - NO-HUB
SJ - 95-5 TIN-ANTIMONY SOLDER JOINT
SS - STANDARD STRENGTH / SERVICE WEIGHT
SW - SOLVENT WELD

PLUMBING FIXTURE & EQUIPMENT SCHEDULE

MARK	DESCRIPTION	MFGR.	MODEL NUMBER	ACCESSORIES	PIPING CONNECTION SIZES: COLD WATER	HOT WATER	WASTE	VENT	NOTES	EQUIVALENT MANUFACTURERS	FINISH
ACV1	AUTO CONTROL VALVE	FLOW DESIGN	AC	1-GPM FLOW CONTROL CARTRIDGE AS NOTED ON PLANS	-	SEE PLAN	-	-	-	SUBMIT FOR APPROVAL	-
BFP1	BACKFLOW PREVENTER	WATTS	LF909	AIR GAP FITTING PIPED TO FLOOR DRAIN	SEE PLAN	-	-	-	-	FEBCO	-
DF1	ADA BI-LEVEL DRINKING FOUNTAIN WITH BOTTLE FILLER	ELKAY	LZSTL8WSLP	ELKAY MLP200 IN WALL CARRIER, 1.25" TRAP, SUPPLY AND STOP VALVE	0.5"	-	2"	1.5"	2,3,7	HAWS, OASIS	LIGHT GRAY GRANITE
DF2	DRINKING FOUNTAIN WITH BOTTLE FILLER	ELKAY	LZS8WSLP	ELKAY MLP100 IN WALL CARRIER, 1.25" TRAP, SUPPLY AND STOP VALVE	0.5"	-	2"	1.5"	2,3,7	HAWS, OASIS	LIGHT GRAY GRANITE
DN1	DOWNSPOUT NOZZLE	ZURN	Z199-SS	PREPARE FOR FIELD PAINTING, VERIFY FINISH COLOR WITH ARCHITECT. REMOVABLE STAINLESS STEEL SCREEN	-	-	SEE PLAN	-	3	JAY R. SMITH, WADE, JOSAM	-
ESH1	EMERGENCY EYE WASH/SHOWER	HAWS	8330	TWBS.EW BLENDING STATION SET TO 90 DEGREES F OR AS RECOMMENDED BY MANUFACTURER	0.5"	0.5"	2"	1.5"	1,3,6,7	BRADLEY	-
FD1	FLOOR DRAIN	ZURN	FD221-CP	PRO-SET TRAP GUARD	-	-	2"	1.5"	6,9	SIOUX CHIEF, SMITH, WADE	NICKEL BRONZE
FFCO	FINISH FLOOR CLEANOUT	ZURN	ZN1400-ZS	CF CARPET FLANGE COVER WHERE REQUIRED	-	-	SEE PLAN	-	-	JAY R. SMITH, WADE, JOSAM	NICKEL BRONZE
FGCO	FINISH GRADE CLEANOUT	ZURN	ZN1400-HD	-	-	-	SEE PLAN	-	-	JAY R. SMITH, WADE, JOSAM	NICKEL BRONZE
FPWH	FREEZE-PROOF WALL HYDRANT	ZURN	Z1321-C	1/4 TURN, NON-FREEZE WALL HYDRANT W/INTEGRAL VACUUM BREAKER LOOSE KEY	0.75"	-	-	-	1	JAY R. SMITH, WADE, JOSAM	-
FPYH	FREEZE-PROOF YARD HYDRANT	ZURN	Z1396-XL	-	0.75"	-	-	-	1	JAY R. SMITH, WADE, JOSAM	-
FWCO	FINISH WALL CLEANOUT	ZURN	Z1446	STAINLESS STEEL COVER, FIELD PREPARE FOR PAINTING PER ARCH	-	-	SEE PLAN	-	-	JAY R. SMITH, WADE, JOSAM	-
IB1	ICE-MAKER BOX	WATER-TITE	AB9702	QUARTER TURN VALVE(S), REFER TO PLAN FOR QUANTITY	0.5"	-	-	-	1,10	OATEY	WHITE
LV1	ADA COUNTERTOP LAVATORY	KOHLER	K-2214	PROVIDE BOBRICK B-8895 FAUCET, 1.25" TAILPIECE AND TRAP, ADA TRAP, SUPPLIES AND STOP PROTECTORS.	0.5"	0.5"	2"	1.5"	2,3,4,5,6	KOHLER, TOTO, AMERICAN STANDARD	WHITE
LV2	ADA WALL-MOUNT LAVATORY	KOHLER	K-2035-8	PROVIDE KOHLER K-27390-4K-BN FAUCET, 1.25" TAILPIECE AND TRAP, ADA TRAP, SUPPLIES AND STOP PROTECTORS.	0.5"	0.5"	2"	1.5"	2,3,4,5,6	KOHLER, TOTO, AMERICAN STANDARD	WHITE
MB1	MOP BASIN	FIAT	MSB-2424	830-AA FAUCET, 838-AA HOSE AND BRACKET, MSG2424 WALL GUARD	0.75"	0.75"	3"	1.5"	6	STERN WILLIAMS, ZURN	-
OI1	GREASE INTERCEPTOR	STRIEM	OS-100	100-GPM MAX FLOW, 250 GALLON CAPACITY	-	-	SEE PLAN	SEE PLAN	-	SUBMIT FOR APPROVAL	-
RD1	PRIMARY ROOF DRAIN	ZURN	Z100	-	-	-	6"	-	1	JAY R. SMITH, WADE, JOSAM	-
RD2	SECONDARY ROOF DRAIN	ZURN	Z100-W4	-	-	-	6"	-	1	JAY R. SMITH, WADE, JOSAM	-
SH1	SHOWER	-	ENCLOSURE PER ARCH DRAWINGS	BRADLEY WS-1X-HN SHOWER PANEL UNIT	0.5"	0.5"	2"	1.5"	1,6,8	KOHLER, MOEN, DELTA	-
SH2	ADA SHOWER	-	ENCLOSURE PER ARCH DRAWINGS	BRADLEY WS-1X-HN-SB SHOWER PANEL UNIT WITH DIVERTER VALVE AND HANDWALL UNIT	0.5"	0.5"	2"	1.5"	1,2,6,8	KOHLER, MOEN, DELTA	-
SH1	SHOWER	-	ENCLOSURE PER ARCH DRAWINGS	ZURN Z7500 AQUA-PANEL SHOWER UNIT	0.5"	0.5"	2"	1.5"	1,6,8	KOHLER, MOEN, DELTA	-
SH2	ADA SHOWER	-	ENCLOSURE PER ARCH DRAWINGS	ZURN Z7500-DV-HW AQUA-PANEL SHOWER UNIT WITH DIVERTER VALVE AND HANDWALL UNIT	0.5"	0.5"	2"	1.5"	1,2,6,8	KOHLER, MOEN, DELTA	-
SK1	ADA TWO COMPARTMENT SINK	KOHLER	K-5267-4	GUARDIAN G5022 DECK-MOUNTED EYEWASH HOSE UNIT, DELTA 18804Z-SP-DST FAUCET, 1.5" TAILPIECE AND TRAP, SUPPLIES AND STOP VALVES, ADA WRAP FOR SUPPLIES AND TRAP, IN-SINK-ERATOR BADGER 5 DISPOSER	0.5"	0.5"	2"	1.5"	2,3,4,5,6	JUST, MOEN, DAYTON	-
SK2	ADA SINGLE COMPARTMENT SINK	KOHLER	K-3821	DELTA 19802Z-BL-DST FAUCET, 1.5" TAILPIECE AND TRAP, SUPPLIES AND STOP VALVES, ADA WRAP FOR SUPPLIES AND TRAP, IN-SINK-ERATOR BADGER 5 DISPOSER	0.5"	0.5"	2"	1.5"	2,3,4,5,6	JUST, MOEN, DAYTON	-
SK3	ADA SINGLE COMPARTMENT SINK	KOHLER	K-3894-4	KOHLER K-22065-BL FAUCET, 1.5" TAILPIECE AND TRAP, SUPPLIES AND STOP VALVES, ADA WRAP FOR SUPPLIES AND TRAP	0.5"	0.5"	2"	1.5"	2,3,4,5,6	JUST, MOEN, DAYTON	-
SK4	ADA SINGLE COMPARTMENT SINK	KOHLER	K-3362-1	KOHLER K-26368-BL FAUCET, 1.5" TAILPIECE AND TRAP, SUPPLIES AND STOP VALVES, ADA WRAP FOR SUPPLIES AND TRAP	0.5"	0.5"	2"	1.5"	2,3,4,5,6	JUST, MOEN, DAYTON	-
SK5	ADA TWO COMPARTMENT SINK	KOHLER	K-5267-4	DELTA 18804Z-DST FAUCET, 1.5" TAILPIECE AND TRAP, SUPPLIES AND STOP VALVES, ADA WRAP FOR SUPPLIES AND TRAP, IN-SINK-ERATOR BADGER 5 DISPOSER	0.5"	0.5"	2"	1.5"	2,3,4,5,6	JUST, MOEN, DAYTON	-
TD1	TRENCH DRAIN	ZURN	Z886-E4-DGC	DUCTILE IRON SLOTTED GRATE	-	-	SEE PLAN	SEE PLAN	9	JAY R. SMITH, WADE, JOSAM	-
TD2	LINEAR SHOWER DRAIN	ZURN	ZS880-48	-	-	-	SEE PLAN	SEE PLAN	9	JAY R. SMITH, WADE, JOSAM	-
TD3	LINEAR SHOWER DRAIN	ZURN	ZS880-28	-	-	-	SEE PLAN	SEE PLAN	9	JAY R. SMITH, WADE, JOSAM	-
UR1	ADA URINAL	ZURN	Z5738	PROVIDE ZURN ZTR6203-EWS FLUSHOMETER VALVE, VERTICAL CARRIER	0.75"	-	2"	1.5"	1,2,4,6,7	KOHLER, TOTO, AMERICAN STANDARD	-
UR2	ADA URINAL	ZURN	Z5738	PROVIDE ZURN ZTR6203-EWS FLUSHOMETER VALVE, HORIZONTAL CARRIER	0.75"	-	2"	1.5"	1,2,4,6,7	KOHLER, TOTO, AMERICAN STANDARD	-
WC1	WALL-MOUNT FLUSH VALVE WATER CLOSET	ZURN	Z5615-BWL	WHITE, ELONGATED BOWL, VITREOUS CHINA, 1.28 GPF, ZURN ZER6000AV-SM-HET FLUSH VALVE, ZURN Z5955 SEAT, VERTICAL CARRIER	1.25"	-	4"	2"	1,3,6,7,8	KOHLER, TOTO, AMERICAN STANDARD	-
WC2	ADA WALL-MOUNT FLUSH VALVE WATER CLOSET	ZURN	Z5615-BWL	WHITE, ELONGATED BOWL, VITREOUS CHINA, 1.28 GPF, ZURN ZER6000AV-SM-HET FLUSH VALVE, ZURN Z5955 SEAT, VERTICAL CARRIER	1.25"	-	4"	2"	1,2,3,6,7,8	KOHLER, TOTO, AMERICAN STANDARD	-
WC3	WALL-MOUNT FLUSH VALVE WATER CLOSET	ZURN	Z5615-BWL	WHITE, ELONGATED BOWL, VITREOUS CHINA, 1.28 GPF, ZURN ZER6000AV-SM-HET FLUSH VALVE, ZURN Z5955 SEAT, HORIZONTAL CARRIER	1.25"	-	4"	2"	1,3,6,7,8	KOHLER, TOTO, AMERICAN STANDARD	-
WC4	ADA WALL-MOUNT FLUSH VALVE WATER CLOSET	ZURN	Z5615-BWL	WHITE, ELONGATED BOWL, VITREOUS CHINA, 1.28 GPF, ZURN ZER6000AV-SM-HET FLUSH VALVE, ZURN Z5955 SEAT, HORIZONTAL CARRIER	1.25"	-	4"	2"	1,2,3,6,7,8	KOHLER, TOTO, AMERICAN STANDARD	-

NOTES:
1. REFER TO ARCHITECTURAL DRAWINGS FOR MOUNTING HEIGHT.
2. INSTALL ACCESSORIES AS RECOMMENDED BY MANUFACTURER FOR ADA COMPLIANCE WHERE REQUIRED.
3. ACCESSORIES SHALL BE SAME MANUFACTURER AS FIXTURE/EQUIPMENT UNLESS OTHERWISE NOTED.
4. PROVIDE PVC WASTE, TAILPIECE AND P-TRAP. PROVIDE PLATED ESCUTCHEONS AT WALL PENETRATIONS.
5. PROVIDE SINK WITH FAUCET HOLE OPENINGS TO MATCH FAUCET.
6. PROVIDE ALL ACCESSORIES REQUIRED FOR COMPLETE INSTALLATION.
7. PROVIDE WALL CARRIER OR BRACKET WITH ORIENTATION AS RECOMMENDED BY MANUFACTURER FOR WALL MOUNTED INSTALLATION.
8. FIELD COORDINATE/VERIFY FRAMING ROUGH-IN DIMENSIONS WITH ASSOCIATED CONTRACTOR BEFORE ORDERING.
9. INSTALL FLUSH WITH FINISH FLOOR MATERIAL AS RECOMMENDED BY EQUIPMENT MANUFACTURER.
10. PROVIDE SUPPLY AND STOP VALVES.
11. COORDINATE EXACT MOUNTING REQUIREMENTS WITH INTERIOR DESIGNER.
12. PROVIDE WALL CARRIER OR BRACKET AS RECOMMENDED BY MANUFACTURER FOR WALL MOUNTED INSTALLATION.

ELECTRIC UNIT HEATER SCHEDULE

MARK	MANUFACTURER	MODEL #	MOUNTING	CAPACITY (KW)	STAGES	MAX AIRFLOW (CFM)	VOLTAGE/ PHASE	MCA	MOCP	NOTES
UH1	REZNOR	EUH	SUSPENDED	10	1	479	208/3	21.2	30	1,2
UH2	REZNOR	EUH	SUSPENDED	10	1	479	208/3	21.2	30	1,2

NOTES:
1. PROVIDE SUSPENDED MOUNTING KIT.
2. PROVIDE INTEGRAL THERMOSTAT, THERMAL CUT-OUT, FAN DELAY AND DISCONNECT SWITCH.

MINI-SPLIT SYSTEM SCHEDULE

INDOOR UNIT: MARK	AREA SERVED	MANUFACTURER	MODEL #	INDOOR MODEL TYPE	SA (CFM)	VOLTAGE/ PHASE	OUTDOOR UNIT: MARK	MANUFACTURER	MODEL #	COOLING SENSIBLE (MBH)	COOLING TOTAL (MBH)	HEATING (MBH) @ 47 OAT	VOLTAGE/ PHASE	MCA	MOCP	NOTES AND ACCESSORIES
MSFC1	SERVER ROOM	LG	LS243HLV	WALL MOUNTED	600	208/1	MSCU1	LG	LSN243HLV	16.0	22.0	-	208/1	18	20	1,2,3,4,5,6
MSAH1	VESTIBULE	LG	LDN127HV4	DUCTED	350	208/1	MSHP1	LG	LUU127HV	9.0	12.0	15.0	208/1	18	20	2,3,4,6

NOTES/ACCESSORIES:
1. PROVIDE LOW AMBIENT COOLING KIT (0 DEG. F).
2. PROVIDE WALL MOUNTED REMOTE CONTROL THERMOSTAT.
3. PROVIDE CONDENSATE OVERFLOW SWITCH WIRED TO SHUT DOWN UNIT UPON ACTIVATION.
4. PROVIDE REFRIGERANT LINE SET SIZED PER MANUFACTURER'S RECOMMENDATIONS AND ALL ACCESSORIES AS REQUIRED FOR LINE LENGTHS INDICATED.
5. PROVIDE "ASPEN #ASP-MW-115" CONDENSATE PUMP FOR WALL MOUNTED UNIT . PUMP SHALL BE WIRED TO WALL UNIT. RUN 3/4" CONDENSATE PIPE TO NEAREST FLOOR/HUB DRAIN/SINK TRAP.
6. PROVIDE "LITTLE GIANT VCC20-P" 230V WITH SAFETY OVERFLOW SWITCH. PUMP SHALL BE POWERED THROUGH UNIT.
7. REFER TO MECHANICAL DETAIL SHEET FOR ADDITIONAL INSTALLATION REQUIREMENTS.

DUCT INSULATION SCHEDULE

SYSTEM	SERVICE	CONFIGURATION	INSULATION THICKNESS	LOCATION	NOTES
SUPPLY DUCT (GENERAL)	SUPPLY MAIN/BRANCHES	RECTANGULAR/ROUND	1" LINER (FIRST 10 FEET FROM OUTLET) THEN 1.5" WRAP	ALL INDOOR SPACES	1,2
"	SUPPLY MAIN/BRANCHES	RECTANGULAR/ROUND	1" LINER	ALL EXPOSED INDOOR SPACES (EXCEPT FOR NOTE 7)	2
RETURN DUCT (GENERAL)	RETURNMAIN/BRANCHES	RECTANGULAR/ROUND	1" LINER (FIRST 10 FEET FROM OUTLET) THEN 1.5" WRAP	ALL INDOOR SPACES	1,2
EXHAUST DUCT (GENERAL)	EXHAUST MAIN/BRANCHES	RECTANGULAR/ROUND	NONE	ALL INDOOR SPACES	

NOTES:
1. EXTERNAL FIBERGLASS INSULATION WRAP (1.0 LB) W/ FOIL-SCRIM-KRAFT FACING.
2. INTERNAL RECTANGULAR DUCT LINER (2.0 LB) WITH DUST/DIRT/MICROBIAL RESISTANT COATING ("QUIET R","LINACOUSTIC RC","TOUGHGARD R","AP ARMAFLEX" OR APPROVED EQUAL).

GENERAL NOTES:
1. ALL METAL DUCTWORK SPECIFIED TO RECEIVE INTERIOR THERMAL AND ACOUSTICAL LINER IS SIZED ON PLANS TO EXCLUDE THE PROPER THICKNESS OF INSULATION. ADD HEIGHT AND WIDTH OF DUCTWORK TO ACCOMMODATE THICKNESS OF INSULATION AS INDICATED IN THE SCHEDULE ABOVE.
2. APPROVED INSULATION MANUFACTURERS: KNAUF, OWENS-CORNING, JOHNS-MANSVILLE, CERTAINTEED, ARMACELL AP. MINIMUM R-4.2/INCH. NOT TO EXCEED 25/5O FLAME/SMOKE DEVELOPMENT TESTING.

AIRFLOW REGULATOR SCHEDULE

MARK	MANUFACTURER	MODEL #	SERVICE	SIZE	CFM
AFR1	ALDES	CAR3	EXHAUST	6"	75
AFR2	ALDES	CAR3	EXHAUST	10"	275
AFR3	ALDES	CAR3	EXHAUST	10"	250
AFR4	ALDES	CAR3	EXHAUST	10"	200
AFR5	ALDES	CAR3	EXHAUST	8"	150
AFR6	ALDES	CAR3	EXHAUST	10"	350
AFR7	ALDES	CAR3	EXHAUST	14"x14"	1,050

GENERAL NOTES:
1. PROVIDE TRANSITIONS AND FITTINGS AS REQUIRED FOR INSTALLATION.

GRAVITY VENTILATOR SCHEDULE

MARK	MANUFACTURER	MODEL #	SERVICE	CFM	STATIC P.D. (IN. W.C.)	THROAT DIA. (IN.)	NOTES & ACCESSORIES
GV1	COOK	PR12	INTAKE	300	0.05	12	1,2,3,4

NOTES & ACCESSORIES:
1. PROVIDE ROOF CURB COMPATIBLE WITH ROOF CONSTRUCTION.
2. PROVIDE 120-VOLT, TWO-POSITION MOTORIZED DAMPER.
3. PROVIDE ANTI-CONDENSATE COATING
4. PROVIDE BIRD SCREEN

FAN SCHEDULE

MARK	MANUFACTURER	MODEL #	CFM	ESP (IN. W.C.)	MOUNTING	FINISH	VOLTAGE/ PHASE	MOTOR HP	NOTES
EF1	COOK	12AFBC	200	0.5"	INLINE	STD	120/1	1/2	1,2,3,4
EF2	COOK	100 ACEB	640	0.5"	ROOF	STD	120/1	1/6	1,2,4,5
EF3	COOK	80 ACEB	520	0.5"	ROOF	STD	120/1	1/4	1,2,4,5
EF4	COOK	60 ACEB	200	0.25"	ROOF	STD	120/1	1/6	1,2,4,5
EF5	COOK	60 ACEB	300	0.3"	ROOF	STD	120/1	1/6	1,2,4,5

NOTES:
1. FACTORY MOUNTED DISCONNECTING MEANS.
2. GRAVITY BACKDRAFT DAMPER.
3. PROVIDE VIBRATION ISOLATED SUSPENSION MOUNTING KIT.
4. PROVIDE FAN SPEED CONTROLLER LOCATED NEAR FAN MOTOR.
5. PROVIDE ROOF CURB COMPATIBLE WITH ROOF CONSTRUCTION (MINIMUM HEIGHT OF 14" ABOVE FINISHED ROOF SURFACE).

LOUVER SCHEDULE

MARK	MANUFACTURER	MODEL #	SERVICE	CFM	STATIC P.D. (" W.C.)	LENGTH X HEIGHT (IN)	DEPTH (IN)	FREE AREA MIN (SQ.FT.)	VELOCITY (FPM)	NOTES/ ACCESSORIES
L1	GREENHECK	ESD-435	EXHAUST	200	0.06	12x12	4"	0.3	667	1,2,3,4,5,6
L2	GREENHECK	ESD-435	INTAKE	640	0.06	24x18	4"	1.23	520	1,2,3,4,5,6
L3	GREENHECK	ESD-435	INTAKE	520	0.06	18x18	4"	0.88	591	1,2,3,4,5,6

NOTES/ASSESSORIES:
1. ALUMINUM BIRD SCREEN
2. DRAINABLE BLADE
3. DRIP CAP
4. EXTENDED SILL
5. PROVIDE 120-VOLT TWO-POSITION MOTORIZED DAMPER.
6. PAINTABLE FINISH TO MATCH SURROUNDING WALL COLOR.

AIR PURIFICATION SYSTEM SCHEDULE

MARK	UNIT	MANUFACTURER	MODEL	VOLTS	PHASE	NOTES
APS1	FAN POWERED VAV TERMINAL	GPS AIR	CI-2	24	1	1,2,3,4,5,6,7,8

NOTES:
1. PROVIDE AIR PURIFICATION DEVICE FOR FAN POWERED VAV TERMINALS AS INDICATED ON THE VAV TERMINAL SCHEDULE.
2. PROVIDE IAQ PROCEDURE CALCULATION. PRESCRIPTIVE PROCEDURE WILL NOT BE ALLOWED.
3. OZONE DETECTABLE SYSTEM WILL NOT BE ALLOWED.
4. SYSTEM WILL BE MAINTENANCE FREE. NO REPLACEMENT COMPONENT SYSTEM WILL BE ALLOWED.
5. ALL MANUFACTURERS MUST PASS UL 867-2007 OZONE CHAMBER TESTING BY EITHER UL OR ETL.
6. POWERED PARTICULATE FILTERS, POLARIZED MEDIA FILTERS, UNIT-POLAR ION GENERATORS, PLASMA PARTICULATE FILTERS WITH UV SYSTEMS, AND BI-POLAR IONIZATION SYSTEMS REQUIRING PERISHIBLE GLASS TUBES WILL NOT BE ACCEPTABLE.
7. VERIFY EXACT VOLTAGE REQUIREMENTS WITH MANUFACTURER BEFORE SUBMITTING SHOP DRAWINGS.
8. UNIT TO BE POWERED FROM ASSOCIATED EQUIPMENT - WIRING SHALL BE BY ELECTRICAL CONTRACTOR.

AIR DEVICE SCHEDULE

MARK	MANUFACTURER	MODEL #	DUCT CONNECTION SIZE	SERVICE	MODULE SIZE	FRAME	FINISH	DAMPER	MAX. NC	THROW (FT)	STATIC P.D. (" W.C.)	NOTES
E1	KRUEGER	1600 15 DEGREE DEFLECTION; 1/8" BAR; 1/4" SPACING	8x6: 0-100 CFM 12x12: 101-380 CFM 12x16: 201-300 CFM	EXHAUST	-	SURFACE	PER ARCH	AG-35	30	-	0.08"	1,4,5,8
E2	KRUEGER	EG5	8x8: 0-100 CFM 12x12: 0-600 CFM	EXHAUST	-	SURFACE	PER ARCH	-	30	-	0.06"	1,5,8
S1	KRUEGER	PLQ	6": 0-100 CFM 8": 101-200 CFM 10": 201-340 CFM 12" 341-525 CFM	SUPPLY	24x24	LAY-IN	PER ARCH	OBD	30	20	0.08"	1,2,3,4,5,6,8
S2	KRUEGER	DPL	12x6: 0-250 CFM 18x6: 251-550 CFM	SUPPLY	-	SURFACE	PER ARCH	OBD	30	30	0.1"	1,5,8
S3	KRUEGER	1600 0 DEGREE DEFLECTION; 1/8" BAR, 1/4" SPACING	12x6: 0-220 CFM 12x10: 221-450 CFM 18x12: 451-700 CFM	SUPPLY	-	SURFACE	PER ARCH	AG-35	30	20	0.1"	1,4,5,8
S4	KRUEGER	6690	10": 0-300 CFM	SUPPLY	-	LAY-IN	PER ARCH	-	30	-	0.1"	1,3,8
R1	KRUEGER	6490	12x12: 0-700 CFM 16x12: 701-1000 CFM 18x12: 1001-1200 CFM	RETURN	24x24	LAY-IN	PER ARCH	-	30	-	0.08"	1,3,5,8
T1	KRUEGER	S80 (S580 IN RESTROOMS)	10x10: 0-400 CFM	TRANSFER	-	SURFACE	PER ARCH	AG-35	30	-	0.08"	1,3,5,7,8

NOTES:
1. GRILLE/DIFFUSER NECK SHALL BE SAME SIZE AS BRANCH DUCTWORK UNLESS NOTED OTHERWISE ON PLAN.
2. PROVIDE BORDER FOR SURFACE MOUNT INSTALLATION WHEN INSTALLED IN HARD CEILINGS WHICH ALLOWS DIFFUSER/GRILLE TO BE LIFTED UP FOR ABOVE CEILING ACCESS.
3. GRILLE/DIFFUSER SHALL MATCH ADJACENT FINISHES UNLESS NOTED OTHERWISE. COORDINATE TO PAINT GRILLE/DIFFUSER AS REQUIRED.
4. PROVIDE CEILING RADIATION TYPE FIRE DAMPER WHERE INSTALLED AT CEILING MEMBRANE OF RATED FLOOR/CEILING ASSEMBLY.
5. COORDINATE WITH FINISH SCHEDULE AND FINISH PLANS.
6. WHERE BALANCE DAMPERS ARE INSTALLED ABOVE HARD CEILINGS, PROVIDE "BOWDEN" 270-301-EZ REMOTE CABLE CONTROL KIT AND DAMPERS WITH 3" COVER PLATE BY YOUNG REGULATOR COMPANY. COORDINATE EXACT CEILING LOCATION FOR OPERATOR/COVER PLATE WITH ARCHITECT BEFORE INSTALLATION.
7. 35-DEGREE BLADES.
8. ALL AIR DEVICES WITH THE FOLLOWING FINISHES SHALL BE BLACK: PNT-2, PNT-4, PNT-5, AND WP-1. CONTRACTOR SHALL COORDINATE WITH FINISH SCHEDULE AND FINISH PLANS.

FAN POWERED VAV TERMINAL UNIT SCHEDULE

MARK	MANUFACTURER	MODEL	SIZE	MAX PRIMARY CFM	MIN PRIMARY CFM	INLET SP (" W.C.)	ESP (" W.C.)	FAN CFM	HEATER kW	HEATER VOLT/PH	STEPS	MOTOR H.P.	MOTOR VOLT/PH	MCA	MOCP	MAX NC	NOTES
FVAV1	KRUEGER	KQFP	04-06	400	100	1.0	0.5	200	2.5	208/3	3	1/2	208/1	14.9	15	30	1,2,3,4,5,6,7,8,9
FVAV2A	KRUEGER	KQFP	04-10	1000	250	1.0	0.5	350	5	208/3	3	1/2	208/1	23.6	25	30	1,2,3,4,5,6,7,8,9
FVAV2B	KRUEGER	KQFP	04-10	1000	250	1.0	0.5	350	5	208/3	3	1/2	208/1	23.6	25	30	1,2,3,4,5,6,7,8,9
FVAV3	KRUEGER	KQFP	04-06	400	100	1.0	0.5	150	2	208/3	3	1/2	208/1	13.2	15	30	1,2,3,4,5,6,7,8,9
FVAV4	KRUEGER	KQFP	07-10	1100	275	1.0	0.5	400	5.5	208/3	3	1	208/1	32.2	35	30	1,2,3,4,5,6,7,8,9
FVAV5	KRUEGER	KQFP	04-06	400	100	1.0	0.5	200	2.5	208/3	3	1/2	208/1	14.9	15	30	1,2,3,4,5,6,7,8,9
FVAV6A	KRUEGER	KQFP	04-08	900	225	1.0	0.5	225	4	208/3	3	1/2	208/1	20.1	25	30	1,2,3,4,5,6,7,8,9
FVAV6B	KRUEGER	KQFP	04-08	900	225	1.0	0.5	225	4	208/3	3	1/2	208/1	20.1	25	30	1,2,3,4,5,6,7,8,9
FVAV7	KRUEGER	KQFP	04-08	800	200	1.0	0.5	200	3.5	208/3	3	1/2	208/1	18.4	20	30	1,2,3,4,5,6,7,8,9
FVAV8	KRUEGER	KQFP	04-08	700	175	1.0	0.5	200	4	208/3	3	1/2	208/1	20.1	25	30	1,2,3,4,5,6,7,8,9
FVAV9	KRUEGER	KQFP	04-06	500	125	1.0	0.5	200	3.5	208/3	3	1/2	208/1	16.7	20	30	1,2,3,4,5,6,7,8,9
FVAV10	KRUEGER	KQFP	04-08	700	175	1.0	0.5	250	3.5	208/3	3	1/2	208/1	18.4	20	30	1,2,3,4,5,6,7,8,9
FVAV11	KRUEGER	KQFP	04-10	1000	250	1.0	0.5	250	4.5	208/3	3	1/2	208/1	21.9	25	30	1,2,3,4,5,6,7,8,9
FVAV12A	KRUEGER	KQFP	04-08	500	125	1.0	0.5	200	2.5	208/3	3	1/2	208/1	14.9	15	30	1,2,3,4,5,6,7,8,9
FVAV12B	KRUEGER	KQFP	04-08	900	225	1.0	0.5	200	4	208/3	3	1/2	208/1	20.1	25	30	1,2,3,4,5,6,7,8,9
FVAV13A	KRUEGER	KQFP	04-08	700	175	1.0	0.5	200	3.5	208/3	3	1/2	208/1	18.4	20	30	1,2,3,4,5,6,7,8,9
FVAV13B	KRUEGER	KQFP	04-08	700	175	1.0	0.5	200	3.5	208/3	3	1/2	208/1	18.4	20	30	1,2,3,4,5,6,7,8,9
FVAV14	KRUEGER	KQFP	04-06	400	100	1.0	0.5	200	2.5	208/3	3	1/2	208/1	14.9	15	30	1,2,3,4,5,6,7,8,9
FVAV15	KRUEGER	KQFP	04-08	800	200	1.0	0.5	200	3.5	208/3	3	1/2	208/1	18.4	20	30	1,2,3,4,5,6,7,8,9
FVAV16	KRUEGER	KQFP	07-10	1000	250	1.0	0.5	250	4.5	208/3	3	1	208/1	28.7	30	30	1,2,3,4,5,6,7,8,9
FVAV17	KRUEGER	KQFP	04-08	600	150	1.0	0.5	200	3	208/3	3	1/2	208/1	16.7	20	30	1,2,3,4,5,6,7,8,9
FVAV18	KRUEGER	KQFP	04-08	800	200	1.0	0.5	200	3.5	208/3	3	1/2	208/1	18.4	20	30	1,2,3,4,5,6,7,8,9

NOTES:
1. PROVIDE WITH 1/2" MATTE-FACED INSULATION.
2. PROVIDE AIR VALVE WITH AVERAGING SENSOR.
3. PROVIDE WITH BOTTOM ACCESS PANELS.
4. PROVIDE DISCONNECT SWITCH.
5. PROVIDE FILTER RACK WITH 1" PLEATED FILTER.
6. PROVIDE HANGING BRACKETS WITH VIBRATION ISOLATORS.
7. PROVIDE STAND-ALONE ELECTRO-MECHANICAL THERMOSTAT.
8. PROVIDE ECM FAN MOTOR.
9. PROVIDE "APS1" AIR PURIFICATION SYSTEM OR EQUAL TO MEET REQUIREMENTS FOR IAQ PROCEDURE. REFER TO AIR PURIFICATION SYSTEM SCHEDULE.

ROOFTOP UNIT SCHEDULE

MARK	MFGR.	MODEL #	PROJECT PHASE	SUPPLY FAN: SA (CFM)	OA (CFM)	ESP (" W.C.)	FAN H.P.	EXHAUST FAN: AIRFLOW (CFM)	ESP (" W.C.)	FAN H.P.	TOTAL ENERGY RECOVERY WHEEL (SEMCO OR APPROVED EQUAL) COOLING: OA IN (DB/WB)	OA OUT (DB/WB)	HEATING: OA IN (DB/WB)	OA OUT (DB/WB)	COOLING COIL: SHC (MBH)	THC (MBH)	LAT (DB/WB)	ELECTRIC PREHEAT COIL: THC (kW)	STAGES	EAT (DB/WB)	LAT (DB/WB)	VOLTAGE/ PHASE	POWER SUPPLY CIRCUIT #1: MCA	MOCP	CIRCUIT #2: MCA	MOCP	WEIGHT (LBS)	NOTES/ACCESSORIES
RTU1	AAON	RNA-060-D-B-8-GAB0B-CB2L0	1	12,800	3,400	3	(2) 15	2,975	1.2	(2) 10	88.9/78.8	77/65.7	28.5/20.8	57.0/48.4	316.3	468.7	48.4/48.1	30	3	0/0	28.5/20.8	208/3	371	400	104	110	8950	1 THRU 18
			2	19,200	4,800			4,350				75.6/63.2	19.5/14.8	57.0/48.4	429.3	601.0	50.6/50.5				19.5/14.8							

NOTES/ACCESSORIES:
1. FACTORY DISCONNECT SWITCH(ES)
2. EXTERNAL STATIC PRESSURE EXCLUDES COIL AND FILTER LOSS.
3. DIRTY FILTER SENSOR.
4. REFER TO TEMPERATURE CONTROL SPECIFICATIONS FOR CONTROL OF UNIT.
5. 2" MERV-8 AND 12" MERV 13 FILTER SECTION UPSTREAM OF COILS.
6. PROVIDE FACTORY INSTALLED BACNET CARD TO PROVIDE INTEGRATION WITH BUILDING AUTOMATION SYSTEM.
7. FACTORY PROVIDED 120-VOLT, 20-AMP GFI RECEPTACLE. FIELD POWERED BY ELECTRICAL CONTRACTOR
8. 14" HIGH FROM FINISHED ROOF SURFACE, INSULATED, SLOPED ROOF CURB. THRU THE BASE CONNECTION FOR ELECTRCIAL. REFER TO MECHANICAL DETAIL SHEETS AND SPECIFICATIONS FOR ADDITIONAL INSTALLATION AND ACOUSTICAL REQUIREMENTS.
9. LISTED CAPACITIES MEET OR EXCEED ASHRAE EVAPORATION 0.4% WET BULB/MCDB VALUES.
10. 100% COMPARATIVE ENTHALPY ECONOMIZER WITH MOTORIZED OUTSIDE/RELIEF AIR DAMPERS.
11. PROVIDE CONDENSER COIL HAIL GUARDS.
12. FACTORY INSTALLED VFD OR EC FAN MOTORS.
13. STAINLESS STEEL DRAIN PANS. GALVANIZED AND PLASTIC ARE NOT ACCEPTABLE.
14. MINIMUM OF ONE DIGITAL OR INVERTER COMPRESSOR.
15. MOTORIZED ENERGY RECOVERY WHEEL BYPASS DAMPERS.
16. 2" DOUBLE WALL CASING (R-13 MINIMUM).
17. VERTICAL SUPPLY, RETURN, AND EXHAUST DUCT CONNECTIONS.
18. MANUFACTURERS: (BASE BID) - AAON. APPROVED EQUALS: DAIKIN OR PRE-BID APPROVED MANUFACTURER.

GENERAL NOTES:
1. UNIT IS SIZED TO ACCOMMODATE FUTURE PROJECT PHASE. SUPPLY AIR, OUTSIDE AIR, AND EXHAUST AIR SHALL BE BALANCED TO AIRFLOWS FOR PROJECT PHASE "1" AS INDICATED ON THIS SCHEDULE FOR CURRENT PHASE OF CONSTRUCTION.
2. UNIT SHALL MEET LISTED CAPACITIES AND AIRFLOWS FOR PROJECT PHASE "2". CAPACITIES FOR PROJECT PHASE "1" PROVIDED FOR REFERENCE ONLY.

CJD
Engineering | Energy | Innovation
2225 West Chesterfield Boulevard, Suite 200, Springfield, MO 65807
P: 417.877.1700 F: 417.324.7735 www.cjd-eng.com
Missouri State Certificate of Authority #200502690366

Special Notice: Drawings prepared by CJD Engineering LLC are instruments of service for use solely with respect to this project. CJD Engineering LLC retains ownership and all common law, statutory law and other reserved rights including copyrights. This drawing shall not be reused in part or in full for any other work without prior written consent by and appropriate compensation to CJD Engineering LLC. Whosoever changes the design without prior written approval from CJD Engineering LLC, does so at their own risk and assumes full responsibility for any damages, liabilities or costs resulting directly or indirectly from such changes to the fullest extent of the law.

NIXA POLICE DEPARTMENT
NORTH LEEANN DRIVE
NIXA, MO 65714

INSIGHT DESIGN ARCHITECTS IDeA
112 S. Main St., Nixa, MO 65714 Ph: 417-724-8553

CJD engineering | Energy | Innovation

olsson

METTEMEYER ENGINEERING LLC

Chiodini ARCHITECTS
Architecture / Interior Design / Graphics
1401 S. Brentwood Blvd. / Suite 575 / St. Louis, Missouri 63144
314-725-5588 / arch@chiodini.com

Reissue Date

Professional of Record

STATE OF MISSOURI
ALLEN DAVIS
NUMBER
PE-2004017155
PROFESSIONAL ENGINEER

DATE 06.10.2025

Copyright 2025 ©
These prints are the property of the architect and shall be used only for the project referenced above

Drawn: QCJ

Project #: 24-003

Date: 2025.06.10

Drawing Title: MECHANICAL SCHEDULES

Sheet: M300

PRINTED: 6/10/2025 3:45:41 PM

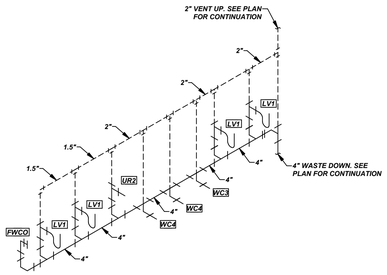

17 RESTROOM WASTE AND VENT ISOMETRIC
NO SCALE

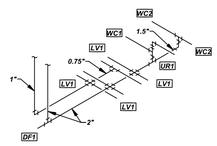

16 RESTROOM WEST PLUMBING ISOMETRIC
NO SCALE

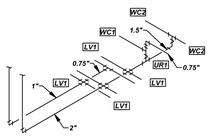

15 RESTROOM SOUTH PLUMBING ISOMETRIC
NO SCALE

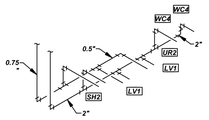

14 RESTROOM NORTH PLUMBING ISOMETRIC
NO SCALE

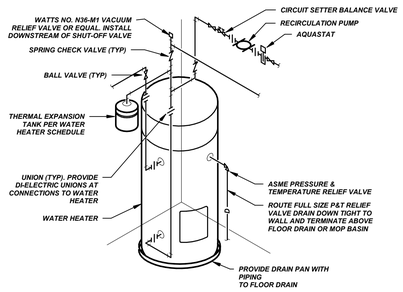

13 WATER HEATER - ELEC W/ RECIRC PUMP
NO SCALE

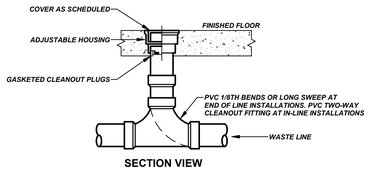

12 FINISH FLOOR CLEANOUT DETAIL
NO SCALE

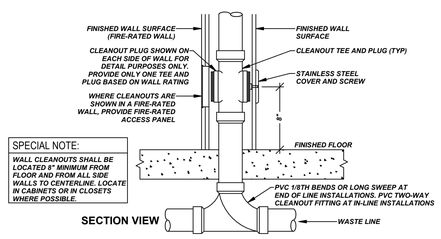

SPECIAL NOTE:
WALL CLEANOUTS SHALL BE LOCATED 6" MINIMUM FROM FLOOR AND FROM ALL SIDE WALLS TO CENTERLINE. LOCATE IN CABINETS OR IN CLOSETS WHERE POSSIBLE.

11 FINISH WALL CLEANOUT DETAIL
NO SCALE

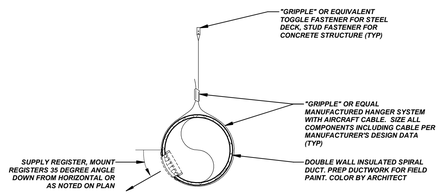

10 EXPOSED SPIRAL DUCT INSTALLATION DETAIL
NO SCALE

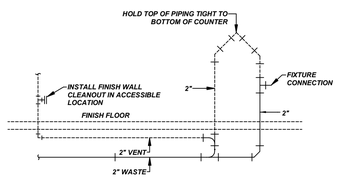

9 ISLAND VENT DETAIL
NO SCALE

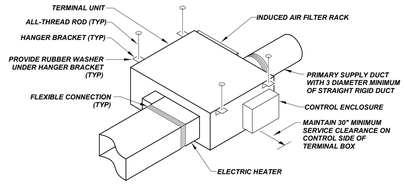

8 VAV FAN TERMINAL UNIT INSTALLATION DETAIL
NO SCALE

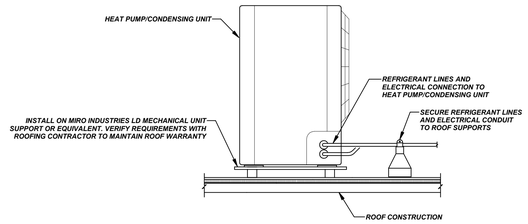

7 ROOF MOUNTED MINI-SPLIT OUTDOOR UNIT DETAIL
NO SCALE

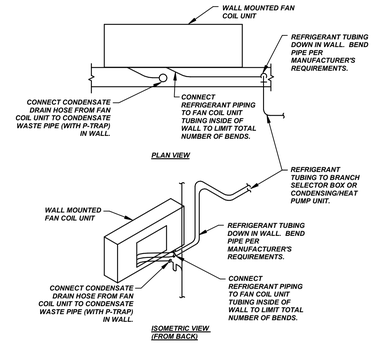

6 WALL MOUNTED FAN COIL UNIT DETAIL
NO SCALE

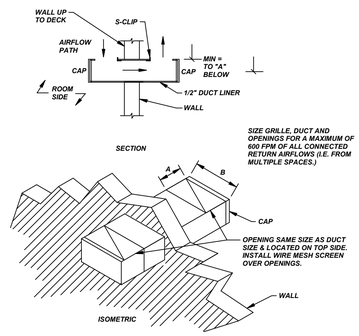

5 DUAL TOP OPENING TRANSFER DUCT DETAIL
NO SCALE

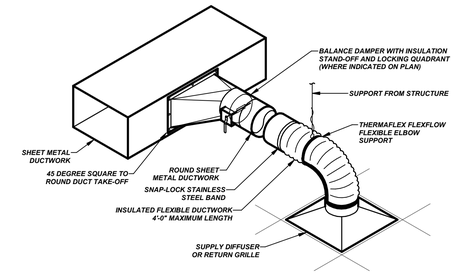

4 SUPPLY DIFFUSER INSTALLATION DETAIL
NO SCALE

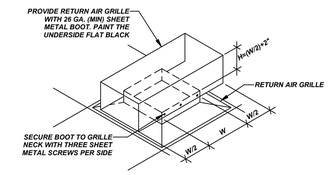

NOTE: WHERE RETURN AIR GRILLE NECK IS RECTANGULAR, W SHALL BE THE LARGER OF THE TWO NECK DIMENSIONS.

3 RETURN GRILLE DETAIL
NO SCALE

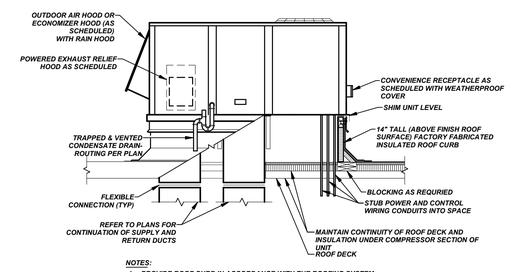

NOTES:
1. PROVIDE ROOF CURB IN ACCORDANCE WITH THE ROOFING SYSTEM MANUFACTURER'S REQUIREMENTS.

2 ROOFTOP UNIT DETAIL
NO SCALE

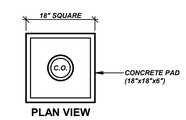

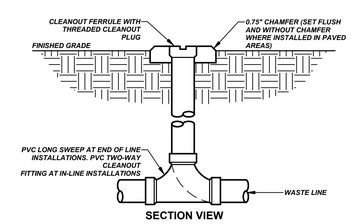

1 FINISH GRADE CLEANOUT DETAIL
NO SCALE

CJD
Engineering | Energy | Innovation
2225 West Chesterfield Boulevard, Suite 200, Springfield, MO 65807
P: 417.877.1700 F: 417.324.7735 www.cjd-eng.com
Missouri State Certificate of Authority #200502690366

General Notice: Drawings prepared by CJD Engineering LLC and instruments of service for use solely with respect to this project. CJD Engineering LLC retains ownership and all common law, statutory law and other reserved rights including copyright. These documents may not be altered by the client or any other party without the written consent by and appropriate compensation to CJD Engineering LLC. Whoever changes the design without prior written approval from CJD Engineering LLC, does so at their own risk and assumes full responsibility for any damages, liabilities or costs resulting directly or indirectly from such changes to the fullest extent of the law.

NIXA POLICE DEPARTMENT
NORTH LEEANN DRIVE
NIXA, MO 65714

INSIGHT DESIGN IDeA ARCHITECTS
112 S. Main St., Nixa, MO 65714 Ph: 417-724-8553
CJD engineering | Energy | Innovation
olsson
METTEMEYER ENGINEERING LLC
Chisdine ARCHITECTS
Architecture / Interior Design / Graphics
1401 S. Brentwood Blvd. / Suite 570 / St. Louis, Missouri 63144
314-725-5080 / arch@chisdine.com

Reissue Date

Professional of Record

STATE OF MISSOURI
ALLEN DAVIS
NUMBER
PE-2004017155
PROFESSIONAL ENGINEER

DATE 06.10.2025

Copyright 2025 ©
These prints are the property of the architect and shall be used only for the project referenced above

Drawn: QCJ

Project #: 24-003

Date: 2025.06.10

Drawing Title: MECHANICAL DETAILS

Sheet: M400

PRINTED: 6/10/2025 3:45:42 PM

TEMPERATURE CONTROLS POINTS LIST		
VAV ROOFTOP UNIT		
TYPE	NAME	DESCRIPTION
AI	BLDG-P	BUILDING STATIC PRESSURE
BO	CLG1-C	COOLING STAGE 1 COMMAND
BO	CLG2-C	COOLING STAGE 2 COMMAND
BO	CLG3-C	COOLING STAGE 3 COMMAND
BO	CLG4-C	COOLING STAGE 4 COMMAND
BO	CLG5-C	COOLING STAGE 5 COMMAND
BO	CLG6-C	COOLING STAGE 6 COMMAND
AI	CC-T	COOLING COIL DISCHARGE TEMPERATURE
AI	SD1-P	SUPPLY DUCT STATIC PRESSURE 1
AI	DA-T	DISCHARGE AIR TEMPERATURE
BI	LT-A	LOW TEMPERATURE ALARM
AI	OA-T	OUTDOOR AIR TEMPERATURE
AI	MA-T	MIXED AIR TEMPERATURE
AO	OAD-O	OUTDOOR AIR DAMPER OUTPUT
BO	ERW-C	ENERGY RECOVERY WHEEL COMMAND
BI	ERW-ST	ENERGY RECOVERY WHEEL STATUS
AO	ERW-SP	ENERGY RECOVERY WHEEL SPEED
AO	WBD-O	WHEEL BYPASS DAMPER OUTPUT
AO	HTG-O	ELECTRIC PREHEAT COIL OUTPUT
AI	FILT-DP	FILTER DIFFERENTIAL PRESSURE
AO	RAD-O	RETURN AIR DAMPER OUTPUT
AI	RA-H	RETURN AIR HUMIDITY
AI	RA-T	RETURN AIR TEMPERATURE
AI	ED-P	EXHAUST AIR DUCT STATIC PRESSURE
AO	RED-O	RELIEF AIR DAMPER OUTPUT
AI	RA1-P	RETURN PLENUM STATIC PRESSURE 1
BO	RLF-C	EXHAUST FAN COMMAND
AO	RLF-O	EXHAUST FAN OUTPUT
BI	RLF-S	EXHAUST FAN STATUS
BO	SF-C	SUPPLY FAN COMMAND
AO	SF-O	SUPPLY FAN OUTPUT
BI	SF-S	SUPPLY FAN STATUS

TEMPERATURE CONTROLS POINTS LIST		
FAN POWERED VAV BOX		
TYPE	NAME	DESCRIPTION
AI	DA-T	DISCHARGE AIR TEMPERATURE
AI	DA-VP	DISCHARGE AIR VELOCITY PRESSURE
AO	DPR-O	SUPPLY AIR DAMPER OUTPUT
BO	SF-C	SUPPLY FAN COMMAND
BI	SF-S	SUPPLY FAN STATUS
AI	ZN-SP	ZONE SETPOINT
AI	ZN-T	ZONE TEMPERATURE

TEMPERATURE CONTROLS POINTS LIST		
EXHAUST FAN		
TYPE	NAME	DESCRIPTION
BO	EF-C	EXHAUST FAN CONTROL
BI	EF-S	EXHAUST FAN STATUS

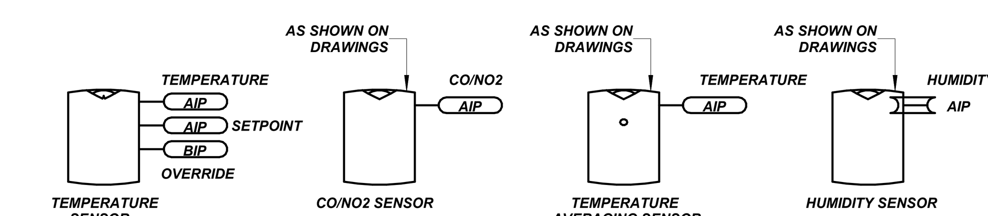

SENSORS

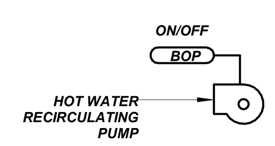

PUMP CONTROL

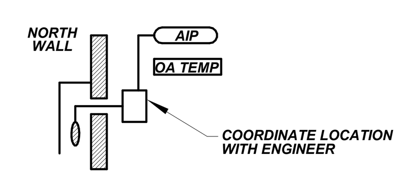

OUTDOOR AIR SENSOR

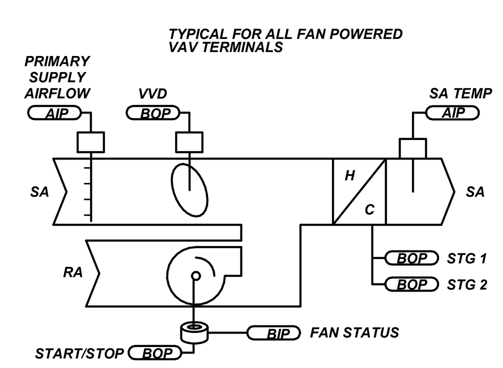

FVAV W/ ELEC HEAT

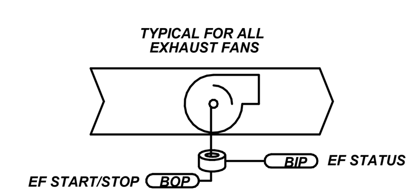

EXHAUST FANS

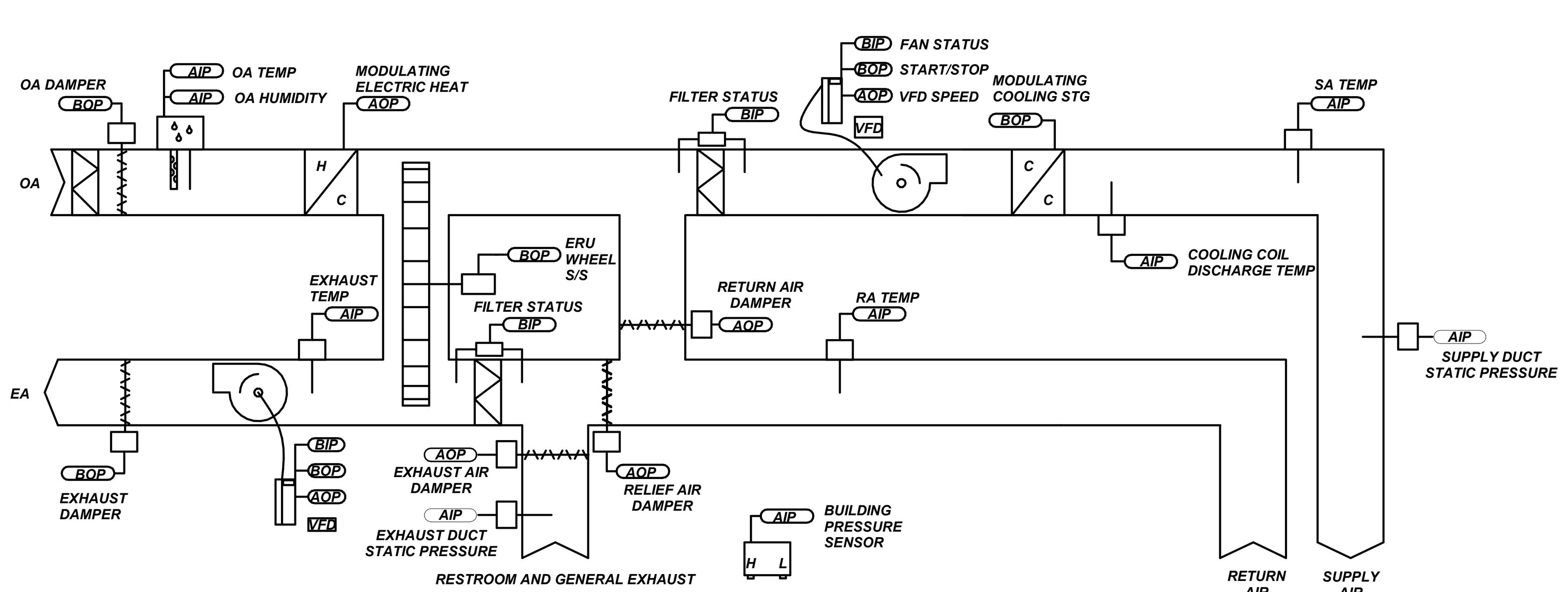

MULTI-ZONE VAV ROOFTOP UNIT W/ ENERGY RECOVERY

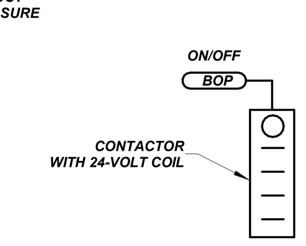

EXTERIOR LIGHTING

1 BUILDING AUTOMATION SYSTEM CONTROL DIAGRAMS

NO SCALE

SEQUENCES OF OPERATION:

FAN POWERED VAV TERMINAL (FVAV) CONTROL SEQUENCE:

BUILDING AUTOMATION SYSTEM INTERFACE:
THE BUILDING AUTOMATION SYSTEM (BAS) SHALL SEND A SIGNAL TO THE CONTROLLERS TO INDICATE UNOCCUPIED/OCCUPIED MODES. THE BAS MAY ALSO SEND A HEAT/COOL MODE, PRIORITY SHUTDOWN COMMANDS, SPACE TEMPERATURE AND OR SPACE TEMPERATURE SETPOINT. IF COMMUNICATION USING ITS LOCAL SETPOINTS.

OCCUPANCY MODE:
THE OCCUPANCY MODE SHALL BE COMMUNICATED OR HARDWIRED TO THE FVAV VIA A BINARY INPUT. VALID OCCUPANCY MODES FOR THE FVAV SHALL BE:

OCCUPIED:
NORMAL OPERATING MODE FOR OCCUPIED SPACES OR DAYTIME OPERATION. WHEN THE UNIT IS IN THE OCCUPIED MODE, THE FVAV CONTROLLER SHALL MAINTAIN THE SPACE TEMPERATURE AT THE ACTIVE OCCUPIED HEATING OR COOLING SETPOINT. APPLICABLE VENTILATION AND AIRFLOW SETPOINTS SHALL BE ENFORCED. THE OCCUPIED MODE SHALL BE THE DEFAULT MODE OF THE FVAV.

UNOCCUPIED:
NORMAL OPERATING MODE FOR UNOCCUPIED SPACE OR NIGHTTIME OPERATION. WHEN THE UNIT IS IN UNOCCUPIED MODE THE FVAV CONTROLLER SHALL MAINTAIN THE SPACE TEMPERATURE AT THE STORED UNOCCUPIED HEATING OR COOLING SETPOINT REGARDLESS OF THE PRESENCE OF A HARDWIRED OR COMMUNICATED SETPOINT. WHEN THE SPACE TEMPERATURE EXCEEDS THE ACTIVE UNOCCUPIED SETPOINT, THE VVD SHALL MODULATE FULLY CLOSED.

OCCUPIED BYPASS:
MODE USED TO TEMPORARILY PLACE THE UNIT INTO THE OCCUPIED OPERATION. TENANTS SHALL BE ABLE TO OVERRIDE THE UNOCCUPIED MODE FROM THE SPACE SENSOR. THE OVERRIDE SHALL LAST FOR A MAXIMUM OF 4 HOURS (ADJ.). THE TENANTS SHALL BE ABLE TO CANCEL THE OVERRIDE FROM THE SPACE SENSOR AT ANY TIME. DURING THE OVERRIDE, THE UNIT SHALL OPERATE IN OCCUPIED MODE.

HEAT/COOL MODE:
THE HEAT/COOL MODE SHALL BE SET BY A COMMUNICATED VALUE OR AUTOMATICALLY BY THE VAV. IN STANDALONE OR AUTO MODE THE VAV SHALL COMPARE THE PRIMARY AIR TEMPERATURE WITH THE CONFIGURED AUTO CHANGEOVER SETPOINT TO DETERMINE IF THE AIR IS "HOT" OR "COLD". HEATING MODE SHALL COMMAND THE VAV TO HEAT ONLY; IT IMPLIES THE PRIMARY AIR TEMPERATURE IS HOT. COOLING MODE SHALL COMMAND THE VAV TO COOL ONLY; IT IMPLIES THE PRIMARY AIR TEMPERATURE IS COLD.

HEAT/COOL SETPOINT:
THE SPACE TEMPERATURE SETPOINT SHALL BE DETERMINED EITHER BY A LOCAL (E.G., THUMBWHEEL) SETPOINT, THE VAV DEFAULT SETPOINT OR A COMMUNICATED VALUE. THE VAV SHALL USE THE LOCALLY STORED DEFAULT SETPOINTS WHEN NEITHER A LOCAL SETPOINT NOR COMMUNICATED SETPOINT IS PRESENT. IF BOTH A LOCAL SETPOINT AND COMMUNICATED SETPOINT EXIST, THE VAV SHALL USE THE COMMUNICATED VALUE.

COOLING MODE:
WHEN THE UNIT IS IN COOLING MODE, THE VAV CONTROLLER SHALL MAINTAIN THE SPACE TEMPERATURE AT THE ACTIVE COOLING SETPOINT BY MODULATING THE AIRFLOW BETWEEN THE ACTIVE COOLING MINIMUM AIRFLOW SETPOINT TO THE MAXIMUM COOLING AIRFLOW SETPOINT. BASED ON THE VAV CONTROLLER OCCUPANCY MODE, THE ACTIVE COOLING SETPOINT SHALL BE ONE OF THE FOLLOWING:

SETPOINT	DEFAULT VALUE
OCCUPIED COOLING SETPOINT	72.0 DEG. F
UNOCCUPIED COOLING SETPOINT	85.0 DEG. F
OCCUPIED STANDBY COOLING SETPOINT	78.0 DEG. F
OCCUPIED MIN COOLING AIRFLOW SETPOINT	SEE FVAV SCHEDULE
OCCUPIED MAX COOLING AIRFLOW SETPOINT	SEE FVAV SCHEDULE

THE VAV SHALL USE THE MEASURED SPACE TEMPERATURE AND THE ACTIVE COOLING SETPOINT TO DETERMINE THE REQUESTED COOLING CAPACITY OF THE UNIT. THE OUTPUTS WILL BE CONTROLLED BASED ON THE UNIT CONFIGURATION AND THE REQUESTED COOLING CAPACITY.

HEATING MODE:
WHEN THE UNIT IS IN HEATING MODE, THE FVAV CONTROLLER SHALL MAINTAIN THE SPACE TEMPERATURE AT THE ACTIVE HEATING SETPOINT BY MODULATING THE AIRFLOW BETWEEN THE ACTIVE HEATING MINIMUM AIRFLOW SETPOINT TO THE MAXIMUM HEATING AIRFLOW SETPOINT. BASED ON THE VAV CONTROLLER OCCUPANCY MODE, THE ACTIVE HEATING SETPOINT SHALL BE ONE OF THE FOLLOWING:

SETPOINT	DEFAULT VALUE
OCCUPIED HEATING SETPOINT	70.0 DEG. F
UNOCCUPIED HEATING SETPOINT	60.0 DEG. F
OCCUPIED STANDBY HEATING SETPOINT	67.0 DEG. F
OCCUPIED MIN HEATING AIRFLOW SETPOINT	SEE FVAV SCHEDULE
OCCUPIED MAX HEATING AIRFLOW SETPOINT	SEE FVAV SCHEDULE

THE FVAV CONTROLLER SHALL USE THE MEASURED SPACE TEMPERATURE AND THE ACTIVE HEATING SETPOINT TO DETERMINE THE REQUESTED HEATING CAPACITY OF THE UNIT. THE OUTPUTS WILL BE CONTROLLED BASED ON THE UNIT CONFIGURATION AND THE REQUESTED HEATING CAPACITY.

INTERMITTENT FAN CONTROL:
DURING ALL OCCUPIED MODES, AS THE SPACE TEMPERATURE FALLS BELOW THE ACTIVE COOLING SETPOINT, THE FVAV SHALL MODULATE TO ITS MINIMUM COOLING AIRFLOW SETPOINT. UPON A CONTINUED DROP IN TEMPERATURE AND/OR UNIT AIRFLOW, THE PARALLEL FAN SHALL BE ENERGIZED. DURING THE UNOCCUPIED MODE, THE PRIMARY AIR VALVE SHALL MODULATE FULLY CLOSED. THE TERMINAL FAN SHALL CYCLE AS NEEDED TO MAINTAIN A REDUCED SPACE TEMPERATURE.

REHEAT CONTROL:
REHEAT WILL ONLY BE ALLOWED WHEN THE PRIMARY AIR TEMPERATURE IS 5.0 DEG. F BELOW THE CONFIGURED REHEAT ENABLE SETPOINT OF 70.0 DEG. F (ADJ.). THE REHEAT SHALL BE ENABLED WHEN THE SPACE TEMPERATURE DROPS BELOW THE ACTIVE HEATING SETPOINT AND THE MINIMUM AIRFLOW REQUIREMENTS ARE MET. DURING REHEAT THE FVAV SHALL OPERATE AT ITS MINIMUM HEATING AIRFLOW SETPOINT AND ENERGIZE THE HEAT AS FOLLOWS:

ELECTRIC STAGED:
STAGE 1 IS ENERGIZED WHEN THE SPACE TEMPERATURE FALLS BELOW THE ACTIVE HEATING SETPOINT AND MINIMUM AIRFLOW REQUIREMENTS ARE MET. WHEN THE ZONE TEMPERATURE RISES ABOVE THE ACTIVE HEATING SETPOINT BY 0.5 DEG. F, STAGE 1 IS DE-ENERGIZED.

STAGE 2 ENERGIZES WHEN THE SPACE TEMPERATURE IS 1.0 DEG. F OR MORE BELOW THE ACTIVE HEATING SETPOINT, AND IS DE-ENERGIZED WHEN THE SPACE TEMPERATURE IS 0.5 DEG. F BELOW THE ACTIVE HEATING SETPOINT.

SPACE SENSOR FAILURE:
IF THERE IS A FAULT WITH THE OPERATION OF THE ZONE SENSOR AN ALARM SHALL BE ANNUNCIATED AT THE BAS. SPACE SENSOR FAILURE SHALL CAUSE THE VAV TO DRIVE THE DAMPER TO MINIMUM AIR FLOW IF THE VAV IS IN THE OCCUPIED MODE, OR DRIVE IT CLOSED IF THE VAV IS IN THE UNOCCUPIED MODE. THE PARALLEL FAN SHALL BE DISABLED ALONG WITH THE REHEAT.

SALLYPORT EXHAUST FANS CONTROL SEQUENCE

BUILDING AUTOMATION SYSTEM INTERFACE:
THE BUILDING AUTOMATION SYSTEM (BAS) SHALL SEND A SIGNAL TO THE CONTROLLERS TO INDICATE OCCUPIED STANDBY, OCCUPIED FULL-ON, AND UNOCCUPIED MODES.

OCCUPIED STANDBY MODE:
DURING OCCUPIED PERIODS, WHEN THE SPACE TEMPERATURE IS BELOW 70 DEG. F (ADJ.) AND WHEN THE SPACE SENSORS DETECT LEVELS OF CARBON MONOXIDE (CO) AND NITROGEN DIOXIDE (NO2) BELOW ALARM SETPOINTS, EXHAUST FAN EF1 SHALL RUN CONTINUOUSLY AND EXHAUST FANS EF2 AND EF3 SHALL STOP RUNNING.

OCCUPIED FULL-ON MODE:
DURING OCCUPIED PERIODS, WHEN THE SPACE TEMPERATURE IS ABOVE 80 DEG. F (ADJ.) AND/OR WHEN THE SPACE SENSORS DETECT LEVELS OF CARBON MONOXIDE (CO) AND NITROGEN DIOXIDE (NO2) ABOVE ALARM SETPOINTS, EXHAUST FANS EF1, EF2, AND EF3 SHALL RUN CONTINUOUSLY.

UNOCCUPIED MODE:
DURING UNOCCUPIED PERIODS, ALL EXHAUST FANS SHALL STOP RUNNING.

RTU1 CONTROL SEQUENCE:

BUILDING AUTOMATION SYSTEM INTERFACE:
THE BUILDING AUTOMATION SYSTEM (BAS) SHALL SEND THE CONTROLLER OCCUPIED BYPASS, MORNING WARM-UP/PRE-COOL, OCCUPIED/UNOCCUPIED AND HEAT/COOL MODES. IF COMMUNICATION IS LOST WITH THE BAS, THE CONTROLLER SHALL OPERATE USING DEFAULT MODES AND SETPOINTS.

OCCUPIED MODE:
DURING OCCUPIED PERIODS, THE SUPPLY FAN SHALL RUN CONTINUOUSLY AND THE OUTSIDE AIR DAMPER SHALL OPEN TO MAINTAIN MINIMUM VENTILATION REQUIREMENTS. THE UNIT CONTROLLER SHALL CONTROL THE SUPPLY FAN SPEED TO MAINTAIN THE CURRENT DUCT STATIC PRESSURE SETPOINT (ADJ.). OUTSIDE AIR AND RETURN AIR DAMPERS SHALL MODULATE TO MAINTAIN PRESCRIBED AMOUNT OF OUTSIDE AIR DURING ALL OCCUPIED PERIODS. THE DX COOLING SHALL STAGE AND ELECTRIC PREHEAT SHALL MODULATE TO MAINTAIN THE CURRENT DISCHARGE AIR TEMPERATURE SETPOINT. IF ECONOMIZING IS ENABLED THE OUTSIDE AIR DAMPER SHALL MODULATE TO MAINTAIN THE CURRENT DISCHARGE AIR TEMPERATURE SETPOINT.

UNOCCUPIED MODE:
WHEN THE SPACE TEMPERATURE IS BELOW THE UNOCCUPIED HEATING SETPOINT OF 60.0 DEG. F (ADJ.) THE SUPPLY FAN SHALL MODULATE AS NECESSARY TO MAINTAIN DUCT STATIC PRESSURE SETPOINT (ADJ.), THE OUTSIDE AIR DAMPER SHALL REMAIN CLOSED. WHEN THE SPACE TEMPERATURE RISES ABOVE THE UNOCCUPIED HEATING SETPOINT OF 60.0 DEG. F (ADJ.) PLUS THE UNOCCUPIED DIFFERENTIAL OF 4.0 DEG. F (ADJ.) THE SUPPLY FAN SHALL STOP AND THE ELECTRIC HEAT SHALL BE DISABLED. WHEN THE SPACE TEMPERATURE IS ABOVE THE UNOCCUPIED COOLING SETPOINT OF 85.0 DEG. F (ADJ.) THE SUPPLY FAN SHALL MODULATE AS NECESSARY TO MAINTAIN DUCT STATIC PRESSURE SETPOINT (ADJ.), THE OUTSIDE AIR DAMPER SHALL OPEN IF ECONOMIZING IS ENABLED AND REMAIN CLOSED IF ECONOMIZING IS DISABLED AND THE DX COOLING SHALL BE ENABLED. WHEN THE SPACE TEMPERATURE FALLS BELOW THE UNOCCUPIED COOLING SETPOINT OF 85.0 DEG. F (ADJ.) MINUS THE UNOCCUPIED DIFFERENTIAL OF 4.0 DEG. F (ADJ.) THE SUPPLY FAN SHALL STOP, THE DX COOLING SHALL BE DISABLED AND THE OUTSIDE AIR DAMPER SHALL CLOSE.

OPTIMAL START:
THE BAS SHALL MONITOR THE SCHEDULED OCCUPIED TIME, OCCUPIED SPACE SETPOINTS AND SPACE TEMPERATURE TO CALCULATE WHEN THE OPTIMAL START OCCURS.

MORNING WARM-UP MODE:
DURING OPTIMAL START, IF THE AVERAGE SPACE TEMPERATURE IS BELOW THE OCCUPIED HEATING SETPOINT A MORNING WARM-UP MODE SHALL BE ACTIVATED. WHEN MORNING WARM-UP IS INITIATED THE UNIT SHALL ENABLE THE SUPPLY FAN. THE OUTSIDE AIR DAMPER SHALL REMAIN CLOSED. WHEN THE AVERAGE SPACE TEMPERATURE REACHES THE OCCUPIED HEATING SETPOINT (ADJ.), THE UNIT SHALL TRANSITION TO THE OCCUPIED MODE.

PRE-COOL MODE:
DURING OPTIMAL START, IF THE AVERAGE SPACE TEMPERATURE IS ABOVE THE OCCUPIED COOLING SETPOINT, PRE-COOL MODE SHALL BE ACTIVATED. WHEN PRE-COOL IS INITIATED THE UNIT SHALL ENABLE THE FAN AND COOLING OR ECONOMIZER. THE OUTSIDE AIR DAMPER SHALL REMAIN CLOSED, UNLESS ECONOMIZING. WHEN THE AVERAGE SPACE TEMPERATURE REACHES OCCUPIED COOLING SETPOINT (ADJ.), THE UNIT SHALL TRANSITION TO THE OCCUPIED MODE.

OPTIMAL STOP:
THE BAS SHALL MONITOR THE SCHEDULED UNOCCUPIED TIME, OCCUPIED SETPOINTS AND SPACE TEMPERATURE TO CALCULATE WHEN THE OPTIMAL STOP OCCURS. WHEN THE OPTIMAL STOP MODE IS ACTIVE THE UNIT CONTROLLER SHALL MAINTAIN THE SPACE TEMPERATURE TO THE SPACE TEMPERATURE OFFSET SETPOINT.

OCCUPIED BYPASS:
THE BAS SHALL MONITOR THE STATUS OF THE "ON" AND "CANCEL" BUTTONS OF THE SPACE TEMPERATURE SENSORS. WHEN AN OCCUPIED BYPASS REQUEST IS RECEIVED FROM A SPACE SENSOR, THE UNIT SHALL TRANSITION FROM ITS CURRENT OCCUPANCY MODE TO OCCUPIED BYPASS MODE AND THE UNIT SHALL MAINTAIN THE SPACE TEMPERATURE TO THE OCCUPIED SETPOINTS (ADJ.).

COOLING MODE:
THE UNIT CONTROLLER SHALL USE THE DISCHARGE AIR TEMPERATURE SENSOR AND DISCHARGE AIR TEMPERATURE COOLING SETPOINT TO DETERMINE WHEN TO INITIATE REQUESTS FOR COOLING. DISCHARGE AIR SETPOINT SHALL BE MAINTAINED BY MODULATING THE ECONOMIZER OR STAGING THE DX COOLING AS REQUIRED TO MAINTAIN THE DISCHARGE AIR SETPOINT. DURING UNOCCUPIED HEATING OR MORNING WARM-UP MODE, THE UNIT HEAT REQUEST WILL BE COMMUNICATED TO THE SYSTEM FVAVS PRIOR TO COMMENCING HEATING OPERATION TO ALLOW VAV UNITS TO OPEN. THE VFD SHALL BE COMMANDED TO 100% AND THE HEAT WILL BE STAGED ON AND OFF TO SATISFY THE ZONE TEMPERATURE SETPOINT. DURING OCCUPIED CHANGEOVER HEATING, THE UNIT CONTROLLER SHALL MODULATE THE ELECTRIC PREHEAT TO MAINTAIN THE DISCHARGE AIR HEATING SETPOINT

SUPPLY AIR TEMPERATURE RESET CONTROL:
THE DISCHARGE AIR TEMPERATURE SETPOINT, 55.0 DEG. F - 65.0 DEG. F (ADJ.) SHALL BE RESET BASED ON EITHER THE OUTSIDE AIR TEMPERATURE OR SPACE AVERAGE TEMPERATURE (ADJ.). THE MINIMUM DISCHARGE AIR SETPOINT SHALL BE SET AT 55.0 DEG. F (ADJ.). THE DISCHARGE TEMPERATURE SENSOR SHALL PREVENT THE DISCHARGE AIR TEMPERATURE FROM FALLING BELOW THE MINIMUM DISCHARGE AIR SETPOINT (ADJ.). IF THE DISCHARGE AIR TEMPERATURE CONTINUES TO FALL, THE DISCHARGE TEMPERATURE SENSOR SHALL ACT AS A LOW DISCHARGE TEMPERATURE LIMIT, A LOW TEMPERATURE ALARM SHALL BE ANNUNCIATED, AND THE UNIT SHALL SHUT DOWN. IF THE DISCHARGE TEMPERATURE RISES ABOVE THE HIGH LIMIT SETPOINT THE SENSOR SHALL ACT AS A HIGH DISCHARGE TEMPERATURE LIMIT AND SHALL KEEP THE UNIT RUNNING, A HIGH TEMPERATURE ALARM SHALL BE ANNUNCIATED.

OUTDOOR AIR TEMPERATURE RESET:
THE DISCHARGE AIR TEMPERATURE SETPOINT SHALL BE ADJUSTED BASED ON THE OUTSIDE AIR TEMPERATURE AND THE COOLING LOAD OF THE BUILDING.

SPACE TEMPERATURE RESET:
THE DISCHARGE AIR TEMPERATURE SETPOINT SHALL BE ADJUSTED BASED ON THE TEMPERATURE OF THE CRITICAL SPACE(S).

ECONOMIZER:
THE SUPPLY AIR SENSOR SHALL MEASURE THE DRY BULB TEMPERATURE OF THE AIR LEAVING THE EVAPORATOR COIL WHILE ECONOMIZING. WHEN ECONOMIZING IS ENABLED AND THE UNIT IS OPERATING IN THE COOLING MODE, THE ECONOMIZER DAMPER SHALL MODULATE BETWEEN ITS MINIMUM POSITION AND 100% TO MAINTAIN THE DISCHARGE AIR TEMPERATURE SETPOINT. WHEN ECONOMIZING IS ENABLED, THE ENERGY RECOVERY WHEEL SHALL BE DISABLED AND THE ENERGY RECOVERY WHEEL BYPASS DAMPERS SHALL MODULATE OPEN. THE EXHAUST FAN VFD SHALL MODULATE TO MAINTAIN THE BUILDING PRESSURE SETPOINT. WHEN ECONOMIZING IS ENABLED, THE DAMPERS LOCATED IN THE RETURN AIRSTREAM AND RESTROOM/GENERAL EXHAUST AIRSTREAM SHALL MODULATE TO MAINTAIN A MINIMUM DUCT PRESSURE SETPOINT OF 0.5 IN. W.C. (ADJ.) IN THE RESTROOM/GENERAL EXHAUST DUCT. THE ECONOMIZER DAMPER SHALL MODULATE TOWARD MINIMUM POSITION IN THE EVENT THE MIXED AIR TEMPERATURE FALLS BELOW THE LOW LIMIT TEMPERATURE SETTING. COMPRESSORS SHALL BE DELAYED FROM OPERATING UNTIL THE ECONOMIZER HAS OPENED TO 100%.

COMPARATIVE ENTHALPY:
OUTSIDE AIR (OA) ENTHALPY SHALL BE COMPARED WITH RETURN AIR (RA) ENTHALPY POINT. THE ECONOMIZER SHALL ENABLE WHEN OA ENTHALPY IS LESS THAN RA ENTHALPY - 3.0 BTU/LB. THE ECONOMIZER SHALL DISABLE WHEN OA ENTHALPY IS GREATER THAN RA ENTHALPY.

SUPPLY FAN:
THE SUPPLY FAN SHALL BE ENABLED WHILE IN THE OCCUPIED MODE AND CYCLED ON DURING THE UNOCCUPIED MODE. A DIFFERENTIAL PRESSURE SWITCH SHALL MONITOR THE DIFFERENTIAL PRESSURE ACROSS THE FAN. IF THE SWITCH DOES NOT OPEN WITHIN 40 SECONDS AFTER A REQUEST FOR FAN OPERATION A FAN FAILURE ALARM SHALL BE ANNUNCIATED AT THE BAS, THE UNIT SHALL STOP, REQUIRING A MANUAL RESET.

SUPPLY DUCT STATIC PRESSURE CONTROL:
DURING THE OCCUPIED MODE THE UNIT CONTROLLER SHALL MODULATE THE OUTPUT TO THE VFD AS REQUIRED TO MAINTAIN THE DUCT STATIC PRESSURE SETPOINT OF 1.5 INCHES OF W.C. (ADJ.). IF THE DUCT STATIC PRESSURE FALLS BELOW 1.3 INCHES OF W.C. (ADJ.) THE UNIT CONTROLLER SHALL INCREASE THE OUTPUT TO THE VFD TO MAINTAIN SETPOINT. IF THE DUCT STATIC PRESSURE RISES ABOVE 1.7 INCHES OF W.C. (ADJ.) THE UNIT CONTROLLER SHALL DECREASE THE OUTPUT TO THE VFD TO MAINTAIN SETPOINT. UPON A CALL FOR HEATING OR COOLING IN THE UNOCCUPIED MODE THE UNIT CONTROLLER SHALL MODULATE THE SPEED OF THE VFD TO 100%.

IF FOR ANY REASON THE SUPPLY AIR PRESSURE EXCEEDS THE SUPPLY AIR PRESSURE HIGH LIMIT, THE SUPPLY FAN SHALL SHUT DOWN. THE UNIT SHALL BE ALLOWED TO RESTART THREE TIMES AFTER A 15 MINUTE OFF PERIOD. IF THE OVERPRESSURIZATION CONDITION OCCURS ON THE FOURTH RESTART, THE UNIT SHALL SHUT DOWN AND A MANUAL RESET DIAGNOSTIC IS DISPLAYED AT THE REMOTE PANEL AND/OR THE BAS SYSTEM.

FILTER STATUS:
A DIFFERENTIAL PRESSURE SWITCH SHALL MONITOR THE DIFFERENTIAL PRESSURE ACROSS THE FILTER WHEN THE FAN IS RUNNING. IF THE SWITCH CLOSES FOR 2 MINUTES AFTER A REQUEST FOR FAN OPERATION A DIRTY FILTER ALARM SHALL BE ANNUNCIATED AT THE BAS.

BUILDING PRESSURE CONTROL:
A DIFFERENTIAL PRESSURE TRANSDUCER SHALL ACTIVELY MONITOR THE DIFFERENCE IN PRESSURE BETWEEN THE BUILDING (INDOORS) AND OUTDOORS. IF THE BUILDING PRESSURE INCREASES ABOVE THE DIFFERENTIAL PRESSURE SETPOINT, THE UNIT CONTROLLER SHALL MODULATE THE EXHAUST FAN AND DAMPERS LOCATED IN THE RETURN AIRSTREAM AND RESTROOM/GENERAL EXHAUST AIRSTREAM TO CONTROL BUILDING PRESSURE TO THE DIFFERENTIAL PRESSURE SETPOINT WHILE MAINTAINING A MINIMUM DUCT PRESSURE SETPOINT OF 0.5 IN. W.C. (ADJ.) IN THE RESTROOM/GENERAL EXHAUST DUCT. IF THE BUILDING PRESSURE DECREASES BELOW THE DIFFERENTIAL PRESSURE SETPOINT, THE CONTROLLER SHALL MODULATE THE EXHAUST FAN TO MAINTAIN SPECIFIED EXHAUST AIRFLOW AND THE ECONOMIZER DAMPERS LO SHALL CLOSE.

EXHAUST FAN STATUS:
A DIFFERENTIAL PRESSURE SWITCH SHALL MONITOR THE DIFFERENTIAL PRESSURE ACROSS THE FAN. IF THE SWITCH IS DETECTED TO BE OPEN FOR 40 CONSECUTIVE SECONDS AFTER A REQUEST FOR EXHAUST FAN OPERATION A FAN FAILURE ALARM SHALL BE ANNUNCIATED AT THE BAS AND THE EXHAUST FAN SHALL STOP. A MANUAL RESET SHALL BE REQUIRED.

ENERGY RECOVERY WHEEL:
WHEN THE OUTSIDE AIR DAMPER IS OPEN TO THE MINIMUM POSITION, THE ENERGY RECOVERY WHEEL SHALL BE ENABLED. WHEN THE OUTSIDE AIR DAMPER IS CLOSED OR ECONOMIZING IS ENABLED, THE ENERGY RECOVERY WHEEL SHALL BE DISABLED.

CJD
Engineering | Energy | Innovation
2225 West Chesterfield Boulevard, Suite 200, Springfield, MO 65807
P: 417.877.1700 F: 417.324.7735 www.cjd-eng.com
Missouri State Certificate of Authority #200502690366

Special Notice: Drawings prepared by CJD Engineering LLC are instruments of service for use solely with respect to this project. CJD Engineering LLC retains ownership and all common law, statutory law and other reserved rights including copyrights. This drawing shall not be reused in part or in full for any other work without prior written consent by and appropriate compensation to CJD Engineering LLC. Whosoever changes the design without prior written approval from CJD Engineering LLC, does so at their own risk and assumes full responsibility for any damages, liabilities or costs resulting directly or indirectly from such changes to the fullest extent of the law.

NIXA POLICE DEPARTMENT

NORTH LEEANN DRIVE
NIXA, MO 65714

INSIGHT DESIGN iDeA ARCHITECTS
112 S. Main St., Nixa, MO 65714 Ph: 417-724-8553

CJD engineering | Energy | Innovation

olsson

METTEMEYER ENGINEERING LLC

Chiodini ARCHITECTS
Architecture / Interior Design / Graphics
1401 S. Brentwood Blvd. / Suite 575 / St. Louis, Missouri 63144
314-725-5588 / arch@chiodini.com

Reissue Date

Professional of Record

STATE OF MISSOURI ALLEN DAVIS NUMBER PE-2004017155 PROFESSIONAL ENGINEER

DATE 06.10.2025

Copyright 2025 ©
These prints are the property of the architect and shall be used only for the project referenced above

Drawn: QCJ

Project #: 24-003

Date: 2025.06.10

Drawing Title: MECHANICAL DETAILS

Sheet: M401

PRINTED: 6/10/2025 3:21:31 PM

ELECTRICAL SYMBOLS:

J	JUNCTION BOX, FOR ELECTRICAL CONNECTION OR AS NOTED
▼	* TELEPHONE OR DATA OUTLET
TV	* CABLE TELEVISION OR MATV OUTLET

* REFER TO TECHNOLOGY DRAWINGS FOR ROUGH-IN AND INSTALLATION REQUIREMENTS FOR ALL LOW-VOLTAGE SYSTEM COMPONENTS.

ELEC. EQUIPMENT SYMBOLS:

- DISTRIBUTION, FEEDER, OR POWER PANEL
- LIGHTING AND POWER PANELBOARD
- ELECTRICAL EQUIPMENT. SEE SCHEDULES FOR TAGGED EQUIPMENT
- DISCONNECT SWITCH

FIRE ALARM GENERAL NOTES:

GENERAL:

1. PROVIDE COMPLETE ADDRESSABLE, MANUAL FIRE ALARM SYSTEM. WORK SHALL INCLUDE FURNISHING OF LABOR, EQUIPMENT, MATERIALS, INSTALLATION AND PROGRAMMING OF NEW DEVICES AND WIRING. INCLUDE NAC POWER SUPPLIES (AS NECESSARY), MANUAL PULL STATIONS, AUTOMATIC SMOKE DETECTORS, NOTIFICATION APPLIANCES, WIRING, TERMINATIONS, ELECTRICAL BOXES AND ALL OTHER NECESSARY MATERIALS FOR A COMPLETE OPERATING SYSTEM. EVERY ITEM OF THE FIRE ALARM SYSTEM SHALL BE U.L. LISTED. COORDINATE LOCATIONS AND ELECTRICAL REQUIREMENTS FOR ANY ADDITIONAL POWER SUPPLIES OR NAC PANELS WITH ELECTRICAL CONTRACTOR, TO PROVIDE POWER AS REQUIRED.
2. REFER TO SPECIFICATIONS FOR ADDITIONAL REQUIREMENTS.
3. INITIATION DEVICE AND NOTIFICATION APPLIANCE LOCATIONS ARE DIAGRAMMATICALLY INDICATED ON PLANS. EXACT DEVICE AND APPLIANCE QUANTITIES, LOCATIONS, SPECIFICATIONS, ETC. SHALL BE VERIFIED BY FIRE ALARM CONTRACTOR AND VENDOR TO ACCOMMODATE ALL APPLICABLE CODE AND STANDARD REQUIREMENTS.
4. NO WORK MAY BEGIN ON ANY SEGMENT OF THIS PROJECT UNTIL THE ENGINEER HAS REVIEWED SUBMITTALS FOR CONFORMITY WITH PLANS AND SPECIFICATIONS. FIRE ALARM SYSTEM EQUIPMENT SUBMITTALS SHALL INCLUDE PRODUCT DATA SHEETS, EQUIPMENT WIRING DIAGRAMS, SEQUENCE OF OPERATIONS, VOLTAGE DROP CALCULATIONS, BATTERY CALCULATIONS, O&M MANUALS, OPERATORS MANUAL, PROGRAMMING MANUAL, ENGINEERING INSTALLATION AND MAINTENANCE MANUALS, LICENSES, GUARANTEES AND WARRANTIES.
5. LABOR & MATERIALS FOR FIRE ALARM SYSTEM SPECIFIED SHALL BE WARRANTED FREE FROM DEFECTS FOR A PERIOD OF TWELVE (12) MONTHS AFTER SUBSTANTIAL COMPLETION. FIRE ALARM SYSTEM FAILURES DURING THE WARRANTY PERIOD SHALL BE ADJUSTED, REPAIRED, OR REPLACED AT NO CHARGE OR REDUCTION IN SERVICE TO THE OWNER. THE CONTRACTOR SHALL RESPOND TO THE OWNER'S REQUEST FOR WARRANTY SERVICE WITHIN 24 HOURS DURING CUSTOMARY BUSINESS HOURS.

FIRE ALARM SYMBOLS:

F SV	CEILING MOUNTED AUDIO/VISUAL FIRE ALARM ANNUNCIATING DEVICE
F CO	WALL/CEILING MOUNTED CARBON MONOXIDE DETECTOR MONITORED BY FIRE ALARM SYSTEM
F HD	CEILING MOUNTED HEAT DETECTOR
F SD	CEILING MOUNTED SMOKE DETECTOR
F SHD	CEILING MOUNTED COMBINATION SMOKE/HEAT DETECTOR
F DD	DUCT MOUNTED SMOKE DETECTOR WITH SAMPLING TUBE. INSTALL AT RETURN DUCT UNLESS OTHERWISE NOTED
F DD FS	DUCT MOUNTED SMOKE DETECTOR WITH SAMPLING TUBE, FOR CONTROL OF FIRE/SMOKE DAMPER. REFER TO PLAN NOTE FOR DETAILS
	FIRE ALARM SYSTEM CONTROL PANEL
F AV	WALL MOUNTED AUDIO/VISUAL FIRE ALARM ANNUNCIATING DEVICE
F DH	FIRE ALARM DOOR HOLDER
F FA	REMOTE ANNUNCIATOR PANEL
F FB	FIRE ALARM BELL
F FS	FLOW SWITCH
F PE	FIRE ALARM SYSTEM POWER EXTENDER
F PS	MANUAL PULL STATION
F RT	DUCT SMOKE DETECTOR REMOTE TEST SWITCH
F TS	TAMPER SWITCH
F V	WALL MOUNTED VISUAL FIRE ALARM ANNUNCIATING DEVICE
F IAM	FIRE ALARM SYSTEM INDIVIDUAL ADDRESSABLE MODULE
F XAV	EXTERIOR AUDIO/VISUAL FIRE ALARM ANNUNCIATING DEVICE

LIGHTING SYMBOLS:

	ILLUMINATED EXIT SIGN
	RECESSED DOWNLIGHT FIXTURE
	LIGHT FIXTURE
NL	INDICATES UNSWITCHED "NIGHT LIGHT" FIXTURE
	EMERGENCY LIGHT FIXTURE
XX	FIXTURE TAG. REFER TO CORRESPONDING SCHEDULE FOR TAGGED EQUIPMENT

LIGHTING CONTROL SYMBOLS:

L OS	CEILING MOUNTED OCCUPANCY SENSOR
L OS	WALL MOUNTED OCCUPANCY SENSOR
L DL	CEILING MOUNTED DAYLIGHTING CONTROLLER

SWITCHING DEVICE SYMBOLS:

$	SINGLE POLE SWITCH
$2	DOUBLE POLE SWITCH
$3	THREE-WAY SWITCH
$4	FOUR-WAY SWITCH
$D	120V DIMMER SWITCH
$ET	120V ELECTRONIC TIMER SWITCH
$HOA	HAND-OFF-AUTO SELECTOR SWITCH
$K	20AMP, SINGLE POLE, 120/277V, KEY OPERATED SWITCH
$LV	LOW VOLTAGE SWITCH
$M	20AMP, MOMENTARY CONTACT, 120/277V SWITCH
$OS	20AMP, SINGLE POLE OCCUPANCY SENSOR

RECEPTACLE SYMBOLS:

	SIMPLEX RECEPTACLE; 2P, 3W, 20A, 125V
	DUPLEX RECEPTACLE; 2P, 3W, 20A, 125V
42"	DUPLEX RECEPTACLE; MOUNTED @ 42" ABOVE FINISH FLOOR
C	DUPLEX RECEPTACLE; INSTALLED FLUSH WITH CEILING
AC	DUPLEX RECEPTACLE; MOUNTED 6" ABOVE COUNTERTOP BACKSPLASH
GFI	DUPLEX RECEPTACLE W/ GROUND FAULT INTERRUPTER
WP	DUPLEX RECEPTACLE; WEATHERPROOF
	DOUBLE DUPLEX RECEPTACLE WITH COMMON FACEPLATE
	RECEPTACLE MOUNTED IN FLUSH FLOOR BOX
	RECEPTACLE MOUNTED IN FS TYPE BOX ON RIGID CONDUIT
NEMA	SIMPLEX RECEPTACLE; NEMA CONFIGURATION AS INDICATED

PLAN NOTATIONS:

1 / M1	DETAIL REFERENCE UPPER - DETAIL NUMBER LOWER - SHEET NUMBER
ROOM NAME 101	ROOM NAME & NUMBER
XX	KEYNOTE
	CONNECTION OF NEW TO EXISTING
XX	EQUIPMENT DESIGNATION
(E)	EXISTING DESIGNATION
S.A.	SUPPLY AIR
R.A.	RETURN AIR
E.A.	EXHAUST AIR

NOTE: NOT ALL SYMBOLS USED IN THESE CONSTRUCTION DOCUMENTS AND ALL SYMBOLS USED ON CONSTRUCTION DRAWINGS MAY NOT BE INDICATED ON THIS SYMBOLS LEGEND.

GENERAL ELECTRICAL NOTES:

GENERAL

1. GENERAL ELECTRICAL NOTES APPLY TO ALL ELECTRICAL SHEETS.
2. REFER TO SPECIFICATIONS FOR ADDITIONAL REQUIREMENTS.
3. CJD LLC, BEING THE AUTHOR OF THESE CONSTRUCTION DOCUMENTS RESERVES THE RIGHT OF FINAL INTERPRETATION AS TO THEIR INTENT AND MEANING. ANY ADDITIONAL WORK OR COSTS RESULTING FROM THE CONTRACTORS OWN INTERPRETATION AS TO THE INTENT OR MEANING WITHOUT CONSULTATION WITH CJD LLC SHALL BE THE RESPONSIBILITY OF THE CONTRACTOR AT NO COST TO OWNER OR A/E.
4. THE INTENT OF THE WORK INDICATED ON THESE CONSTRUCTION DOCUMENTS IS TO PROVIDE A FULLY FUNCTIONING SYSTEM IN COMPLETE WORKING ORDER. IT SHALL BE THE RESPONSIBILITY OF THE CONTACTOR AND THE CONTRACTORS SUPPLIERS TO INCLUDE ALL ACCESSORIES, COMPONENTS, PARTS, ETC. THAT MAY NOT BE INDICATED ON THESE CONSTRUCTION DOCUMENTS TO PROVIDE SYSTEMS AND EQUIPMENT THAT OPERATE SATISFACTORILY AS DESIGNED AND INTENDED.
5. ALL ELECTRICAL WORK SHALL BE PERFORMED BY LICENSED CONTRACTORS IN ACCORDANCE WITH THE 2018 INTERNATIONAL BUILDING CODE, THE 2017 NATIONAL ELECTRICAL CODE, AND ALL LOCAL CODES AS ADOPTED BY THE AUTHORITIES HAVING JURISDICTION.
6. THE CONTRACTOR SHALL INCLUDE ALL PERMIT AND INSPECTION FEES IN BID.
7. PLANS ARE DIAGRAMMATIC AND SHALL NOT BE SCALED. REFER TO CIVIL, STRUCTURAL AND ARCHITECTURAL DRAWINGS AND EXISTING CONDITIONS FOR DIMENSIONS. FIELD VERIFY ALL DIMENSIONS.
8. EQUIPMENT AND CONDUIT LAYOUTS ARE DIAGRAMMATIC. FIELD COORDINATE EXACT LOCATIONS AND ROUTINGS WITH STRUCTURE, PIPING, DUCTWORK, LIGHT FIXTURES, ETC. FINAL RESULT SHALL BE EQUIVALENT TO THAT INDICATED ON DRAWINGS.
9. COOPERATE CLOSELY WITH ALL OTHER TRADES TO EXPEDITE CONSTRUCTION AND AVOID INTERFERENCES AND CONFLICTS. BEFORE ANY PIPING, DUCTWORK, CONDUIT, ETC. IS INSTALLED, IT SHALL BE COORDINATED CAREFULLY BETWEEN ALL TRADES.
10. MAINTAIN ALL CLEARANCES REQUIRED FOR EQUIPMENT. DO NOT ROUTE PIPING, DUCTWORK, ETC. ABOVE ELECTRICAL PANELS.
11. DRAWINGS REPRESENT FINAL RESULT. REMOVE, RELOCATE, MODIFY EXISTING EQUIPMENT, DUCTWORK, PIPING, ETC. AS REQUIRED. FIELD VERIFY EXISTING CONDITIONS AND EXACT REQUIREMENTS.
12. COORDINATE INFORMATION OUTLET, RECEPTACLE, AND OTHER DEVICE LOCATIONS WITH OWNER AND WITH MILLWORK AND WITH OTHER TRADES PRIOR TO ROUGH-IN.
13. INFORMATION OUTLET (DATA AND TELEPHONE) DEVICES, WALL PLATES, AND ASSOCIATED WIRING SHALL BE SUPPLIED AND INSTALLED BY OTHERS UNDER A SEPARATE CONTRACT WITH THE OWNER.
14. THE CONTRACTOR SHALL PROVIDE ELECTRONIC SHOP DRAWINGS/SUBMITTIONS ON ALL FIXTURES AND EQUIPMENT FURNISHED UNDER THIS CONTRACT.
15. IF CONTRACTOR WISHES TO INCORPORATE PRODUCTS OTHER THAN THOSE NAMED IN SPECIFICATIONS IN HIS BID OR PRODUCTS BY MANUFACTURERS OTHER THAN THOSE LISTED AS APPROVED MANUFACTURERS, THE CONTRACTOR SHALL SUBMIT A WRITTEN REQUEST FOR REVIEW AND APPROVAL OF PROPOSED SUBSTITUTIONS TO CJD LLC NOT LESS THAN FIVE WORKING DAYS PRIOR TO BID DATE. APPROVAL OR ACCEPTANCE OF PROPOSED SUBSTITUTION OF MANUFACTURERS OR ITEMS IS FOR THE PURPOSES OF BIDDING ONLY AND DOES NOT RELIEVE THE PROPOSED SUBSTITUTION FROM SUBMITTAL/SHOP DRAWING REVIEW AND DOES NOT CONSTITUTE PRIOR APPROVAL OF PROPOSED SUBSTITUTIONS.
16. THE CONTRACTOR SHALL BE RESPONSIBLE FOR THE COSTS OF LARGER WIRING, CONDUIT, ENCLOSURES, CONTROL AND OVERCURRENT PROTECTIVE DEVICES, ETC. RESULTING FROM SUBSTITUTION OF EQUIPMENT OTHER THAN THAT WHICH WAS THE BASIS OF DESIGN AT NO COST TO OWNER OR A/E.
17. THE CONTRACTOR SHALL GUARANTEE ALL EQUIPMENT, ACCESSORIES, AND MATERIAL FURNISHED BY HIM FOR A PERIOD OF ONE YEAR FROM FINAL ACCEPTANCE AGAINST ALL DEFECTS.

FIRE SPRINKLER GENERAL NOTES:

1. PROVIDE DESIGN, MATERIALS, EQUIPMENT, FABRICATION, INSTALLATION, ETC. FOR A WET PIPE FIRE SPRINLER SYSTEM COMPLETE WITH STANDPIPES/FIRE DEPARTMENT CONNECTIONS. ALL PORTIONS OF THE FIRE SYSTEM SHALL BE THE RESPONSIBILITY OF THE FIRE SPRINKLER CONTRACTOR/ENGINEER. ANY PIPING SHOWN AT BUILDINGS OR ON SITE IS FOR REFERENCE ONLY.
2. REFER RO SPECIFICATIONS FOR ADDITIONAL REQUIREMENTS.
3. THE FIRE SPRINKLER SYSTEM DESIGN AND INSTALLATION SHALL COMPLY WITH 2018 INTERNATIONAL BUILDING CODE AND LATEST EDITION OF NFPA 13 AND 14 STATE AND LOCAL CODES AS ADOPTED BY THE CITY OF BRANSON, MISSOURI. REFER TO ARCHITECTURAL CODE SUMMARIES FOR SPECIFIC REQUIREMENTS. ALL FIRE SPRINKLER SYSTEM MATERIALS SHALL BE U.L. LISTED. FIRE SPRINKLER SYSTEM CONTRACTOR SHALL ENGINEER AND INSTALL THE FIRE SPRINKLER SYSTEM AS REQUIRED TO PROVIDE PROPER COVERAGE FOR THE AREA OF WORK.
4. ALL PERMIT AND INSPECTION FEES SHALL BE INCLUDED IN BID.
5. THE PLANS ARE DIAGRAMMATIC AND SHALL BE SCALED. REFER TO ARCHITECTURAL DRAWINGS FOR DIMENSIONS.
6. THE FIRE SPRINKLER CONTRACTOR SHALL BE RESPONSIBLE FOR OBTAINING HIS OWN FLOW READINGS FOR PURPOSES OF DESIGN.
7. SPRINKLER HEADS IN AREAS WITH EXPOSED STRUCTURE SHALL BE CHROME PLATED, UPRIGHT HEADS. SPRINKLER HEADS AT FINISHED CEILING AREAS SHALL BE CONCEALED TYPE WITH WHITE COVER.
8. SUBMIT PDFS OF SCALED LAYOUT DRAWINGS, CALCULATIONS, AND CUT SHEETS TO A/E FOR COORDINATION AND APPROVAL. LAYOUT DRAWINGS SHALL INCLUDE SPRINKLER AND PIPING LOCATIONS, SERVICE DETAILS, ETC. SUBMIT REQUIRED MATERIALS TO AGENCY HAVING JURISDICATION FOR APPROVAL AND PERMIT.
9. FIRE SPRINKLER WORK SHALL BE PERFORMED BY A QUALIFIED CONTRACTOR WITH AT LEAST 3 YEARS OF INSTALLATION EXPERIENCE ON PROJECTS WITH FIRE PROTECTION WORK SIMILAR TO THAT REQUIRED FOR THE PROJECT. THE FIRE SPRINKLER SYSTEM SHALL BE ENGINEERED BY A REGISTERED PROFESSIONAL ENGINEER LICENSED IN THE STATE OF MISSOURI, AND THE DESIGN DRAWINGS AND CALCULATIONS SHALL BEAR HIS/HER MISSOURI SEAL AND SIGNATURE.
10. PROVIDE FIRE DEPARTMENT CONNECTIONS IN ACCORDANCE WITH LOCAL FIRE DEPARTMENT REQUIREMENTS.
11. EQUIPMENT AND DUCTWORK LAYOUTS ARE DIAGRAMMATIC. FIELD COORDINATE EXACT LOCATIONS AND ROUTINGS OF FIRE PROTECTION PIPING WITH STRUCTURE, PIPING, CONDUITS, LIGHT FIXTURES, ETC. FINAL RESULT SHALL BE EQUIVALENT TO THAT INDICATED ON DRAWINGS.
12. COOPERATE CLOSELY WITH ALL OTHER TRADES TO EXPEDITE CONSTRUCTION AND AVOID INTERFERENCES AND CONFLICTS. BEFORE ANY PIPING, DUCTWORK, CONDUIT, ETC. IS INSTALLED, IT SHALL BE COORDINATED CAREFULLY BETWEEN ALL TRADES.
13. CONTRACTOR SHALL COORDINATE WITH ARCHITECT AND STRUCTURAL ENGINEER FOR SIZE AND LOCATION OF SLEEVES THROUGH STRUCTURAL WALLS AND ROOFS.
14. MAINTAIN ALL CLEARANCES REQUIRED FOR EQUIPMENT. DO NOT ROUTE PIPING, ETC. ABOVE ELECTRICAL PANELS.
15. PROVIDE UNISTRUTS AND ACCESSORIES AS REQUIRED FOR SUPPORT OF PIPING, EQUIPMENT, ETC.
16. ALL EXPOSED PIPING, SUPPORTS, ETC. SHALL BE PRIMED AND PAINTED PER THE SPECIFICATIONS.
17. DRAWINGS ARE NOT SET UP SPECIFICALLY ACCORDING TO TRADE AND EACH CONTRACTOR AND SUB-CONTRACTOR OR TRADE IS REQUIRED TO REVIEW THE CONSTRUCTION DOCUMENTS AS A WHOLE AND PROVIDE ANY MISC. ITEMS, MATERIALS, WORK, ETC. REQUIRED TO COMPLETE THE WORK AS SHOWN ON ALL DOCUMENTS. THIS REQUIREMENT APPLIES TO ALL TRADES. STRUCTURAL, MECHANICAL, ELECTRICAL, AND PLUMBING REQUIREMENTS AND RELATED WORK ARE INDICATED THROUGHOUT THE DOCUMENTS AND SHOULD BE REVIEWED WITH THE SPECIFIC MEP AND STRUCTURAL DRAWINGS FOR OVERALL SCOPE OF WORK.

GENERAL HVAC NOTES:

1. HVAC NOTES APPLY TO ALL HVAC SHEETS.
2. REFER TO SPECIFICATION FOR ADDITIONAL REQUIREMENTS.
3. ALL HVAC WORK SHALL BE PERFORMED BY LICENSED MECHANICAL CONTRACTIONS AND SHALL BE IN ACCORDANCE WITH REQUIREMENTS OF THE 2018 INTERNATIONAL MECHANICAL CODE AND ALL APPLICABLE LOCAL CODES AS ADOPTED BY THE CITY OF SPRINGFIELD, MISSOURI.
4. ALL PERMIT AND INSPECTION FEES SHALL BE INCLUDED IN BID.
5. THE PLANS ARE DIAGRAMMATIC AND SHALL BE SCALED. REFER TO ARCHITECTURAL DRAWINGS FOR DIMENSIONS.
6. EQUIPMENT AND DUCTWORK LAYOUTS ARE DIAGRAMMATIC. FIELD COORDINATE EXACT LOCATIONS AND ROUTINGS WITH STRUCTURE, PIPING, CONDUITS, LIGHT FIXTURES, ETC. FINAL RESULT SHALL BE EQUIVALENT TO THAT INDICATED ON DRAWINGS.
7. COOPERATE CLOSELY WITH ALL OTHER TRADES TO EXPEDITE CONSTRUCTION AND AVOID INTERFERENCES AND CONFLICTS. BEFORE ANY PIPING, DUCTWORK, CONDUIT, ETC. IS INSTALLED, IT SHALL BE COORDINATED CAREFULLY BETWEEN ALL TRADES.
8. CONTRACTOR SHALL COORDINATE WITH ARCHITECT AND STRUCTURAL ENGINEER FOR SIZE AND LOCATION OF SLEEVES THROUGH STRUCTURAL WALLS AND ROOFS.
9. MAINTAIN ALL CLEARANCES REQUIRED FOR EQUIPMENT. DO NOT ROUTE PIPING, DUCTWORK, ETC. ABOVE ELECTRICAL PANELS.
10. PROVIDE UNISTRUTS AND ACCESSORIES AS REQUIRED FOR SUPPORT OF DUCTWORK, EQUIPMENT, ETC.
11. ALL EXPOSED DUCTWORK, PIPING, SUPPORTS, ETC. SHALL BE PRIMED AND PAINTED PER THE SPECIFICATIONS.
12. BRANCH DUCTS SHALL BE THE SAME SIZE AS DIFFUSER NECK UNLESS NOTED OTHERWISE.
13. COORDINATE CEILING DIFFUSER AND GRILLE LOCATIONS WITH ARCHITECTURAL REFLECTED CEILING PLANS.
14. REFER TO NOTES THROUGHOUT SHEET FOR OUTSIDE AIR QUANTITIES TO HVAC UNITS.
15. REFER TO SPECIFICATIONS FOR ADDITIONAL REQUIREMENTS.
16. DRAWINGS ARE NOT SET UP SPECIFICALLY ACCORDING TO TRADE AND EACH CONTRACTOR AND SUB-CONTRACTOR OR TRADE IS REQUIRED TO REVIEW THE CONSTRUCTION DOCUMENTS AS A WHOLE AND PROVIDE ANY MISC. ITEMS, MATERIALS, WORK, ETC. REQUIRED TO COMPLETE THE WORK AS SHOWN ON ALL DOCUMENTS. THIS REQUIREMENT APPLIES TO ALL TRADES. STRUCTURAL, MECHANICAL, ELECTRICAL, AND PLUMBING REQUIREMENTS AND RELATED WORK ARE INDICATED THROUGHOUT THE DOCUMENTS AND SHOULD BE REVIEWED WITH THE SPECIFIC MEP AND STRUCTURAL DRAWINGS FOR OVERALL SCOPE OF WORK.

HVAC SYMBOLS:

	FLEX DUCT
	CEILING SUPPLY DIFFUSER
	CEILING RETURN/EXHAUST GRILLE
T	TEMPERATURE SENSOR
S	SPACE CO/CO2/NO2 SENSOR
A	TEMPERATURE AVERAGING SENSOR
H	HUMIDITY SENSOR
12" X 14"	DUCTWORK (WIDTH/HEIGHT)
	RECTANGULAR TO ROUND TAKE-OFF
S1 / CFM	DIFFUSER TYPE AND CFM
MD	MOTORIZED DAMPER

GENERAL PLUMBING NOTES:

1. PLUMBING NOTES APPLY TO ALL PLUMBING SHEETS.
2. REFER TO SPECIFICATION FOR ADDITIONAL REQUIREMENTS.
3. ALL PLUMBING WORK SHALL BE PERFORMED BY LICENSED PLUMBING CONTRACTIONS AND SHALL BE IN ACCORDANCE WITH REQUIREMENTS OF THE 2018 INTERNATIONAL PLUMBING CODE AND ALL APPLICABLE LOCAL CODES AS ADOPTED BY THE CITY OF SPRINGFIELD, MISSOURI.
4. ALL PERMIT AND INSPECTION FEES SHALL BE INCLUDED IN BID.
5. THE PLANS ARE DIAGRAMMATIC AND SHALL BE SCALED. REFER TO ARCHITECTURAL DRAWINGS FOR DIMENSIONS.
6. EQUIPMENT AND PIPING LAYOUTS ARE DIAGRAMMATIC. FIELD COORDINATE EXACT LOCATIONS AND ROUTINGS WITH STRUCTURE, PIPING, CONDUITS, LIGHT FIXTURES, ETC. FINAL RESULT SHALL BE EQUIVALENT TO THAT INDICATED ON DRAWINGS.
7. COOPERATE CLOSELY WITH ALL OTHER TRADES TO EXPEDITE CONSTRUCTION AND AVOID INTERFERENCES AND CONFLICTS. BEFORE ANY PIPING, DUCTWORK, CONDUIT, ETC. IS INSTALLED, IT SHALL BE COORDINATED CAREFULLY BETWEEN ALL TRADES.
8. CONTRACTOR SHALL COORDINATE WITH ARCHITECT AND STRUCTURAL ENGINEER FOR SIZE AND LOCATION OF SLEEVES THROUGH STRUCTURAL WALLS AND ROOFS.
9. MAINTAIN ALL CLEARANCES REQUIRED FOR EQUIPMENT. DO NOT ROUTE PIPING, ETC. ABOVE ELECTRICAL PANELS.
10. PROVIDE UNISTRUTS AND ACCESSORIES AS REQUIRED FOR SUPPORT OF PIPING, EQUIPMENT, ETC.
11. ALL EXPOSED PIPING, SUPPORTS, ETC. SHALL BE PRIMED AND PAINTED PER THE SPECIFICATIONS.
12. REFER TO SPECIFICATIONS FOR ADDITIONAL REQUIREMENTS.
13. ALL MATERIALS INSTALLED WITHIN RETURN AIR PLENUM SHALL BE NONCOMBUSTIBLE, PLENUM RATED.
14. DRAWINGS ARE NOT SET UP SPECIFICALLY ACCORDING TO TRADE AND EACH CONTRACTOR AND SUB-CONTRACTOR OR TRADE IS REQUIRED TO REVIEW THE CONSTRUCTION DOCUMENTS AS A WHOLE AND PROVIDE ANY MISC. ITEMS, MATERIALS, WORK, ETC. REQUIRED TO COMPLETE THE WORK AS SHOWN ON ALL DOCUMENTS. THIS REQUIREMENT APPLIES TO ALL TRADES. STRUCTURAL, MECHANICAL, ELECTRICAL, AND PLUMBING REQUIREMENTS AND RELATED WORK ARE INDICATED THROUGHOUT THE DOCUMENTS AND SHOULD BE REVIEWED WITH THE SPECIFIC MEP AND STRUCTURAL DRAWINGS FOR OVERALL SCOPE OF WORK.

PLUMBING SYMBOLS:

	PLUMBING VENT PIPING
	DOMESTIC COLD WATER PIPING
	DOMESTIC HOT WATER PIPING
	DOMESTIC HOT WATER RETURN PIPING
140° HW	DOMESTIC 140° HOT WATER PIPING
	FIRE SPRINKLER PIPING
RD	PRIMARY ROOF DRAIN PIPING
ORD	OVERFLOW ROOF DRAIN PIPING
SAN	SANITARY SEWER PIPING BELOW GRADE
SAN	SANITARY SEWER PIPING ABOVE GRADE
G	GAS PIPING
D	CONDENSATE PIPING
CA	COMPRESSED AIR PIPING
AV	ACID VENT PIPING
AW	ACID WASTE PIPING
CO2	CARBON DIOXIDE PIPING
C	COMBUSTION PIPING
RL/RS	REFRIGERANT LIQUID AND SUCTION PIPING
	TEE DOWN PIPE
	TEE UP PIPE
	ELBOW DOWN PIPE
	ELBOW UP PIPE
	ELBOW DOWN PIPE WITH VALVE
	ELBOW UP PIPE WITH VALVE
	BACKFLOW PREVENTER VALVE
	PRESSURE REDUCING VALVE
	SHUT-OFF VALVE
	REDUCER
FFCO	FINISH FLOOR CLEANOUT
FGCO	FINISH GRADE CLEANOUT
FD1	FLOOR DRAIN
FPWH	FREEZE-PROOF WALL HYDRANT
FWCO	FINISH WALL CLEANOUT

CJD
Engineering | Energy | Innovation
2225 West Chesterfield Boulevard, Suite 200, Springfield, MO 65807
P: 417.877.1700 F: 417.324.7735 www.cjd-eng.com
Missouri State Certificate of Authority #200502690366

Special Notice: Drawings prepared by CJD Engineering LLC are instruments of service for use solely with respect to this project. CJD Engineering LLC retains ownership and all common law, statutory law and other reserved rights including copyrights. This drawing shall not be reused in part or in full for any other work without prior written consent by and appropriate compensation to CJD Engineering LLC. Whosoever changes the design without prior written approval from CJD Engineering LLC, does so at their own risk and assumes full responsibility for any damages, liabilities or costs resulting directly or indirectly from such changes to the fullest extent of the law.

NIXA POLICE DEPARTMENT
NORTH LEEANN DRIVE
NIXA, MO 65714

INSIGHT DESIGN ARCHITECTS iDeA
112 S. Main St., Nixa, MO 65714 Ph: 417-724-8553

CJD engineering | Energy | Innovation

olsson

METTEMEYER ENGINEERING LLC

Chiodini ARCHITECTS
Architecture / Interior Design / Graphics
1401 S. Brentwood Blvd. / Suite 575 / St. Louis, Missouri 63144
314-725-5588 / arch@chiodini.com

Reissue Date

Professional of Record

STATE OF MISSOURI
ALLEN DAVIS
NUMBER PE-2004017155
PROFESSIONAL ENGINEER

DATE 06.10.2025

Copyright 2025 ©
These prints are the property of the architect and shall be used only for the project referenced above

Drawn: QCJ

Project #: 24-003

Date: 2025.06.10

Drawing Title: MEP SYMBOLS AND NOTES

Sheet: ME000

PRINTED: 6/10/2025 5:04:39 PM

KEYNOTES:

E30	CIRCUIT THROUGH EMERGENCY INVERTER LOCATED IN ROOM 122 CLOSET. CONTROL VIA SWITCH IN ROOM 122.
E42	RETURN DUCT MOUNTED SMOKE DETECTOR FOR SHUTDOWN OF UNIT UPON DETECTION OF SMOKE.
E45	CIRCUIT FAN FOR CONTINUOUS OPERATION.
E47	CONTROL EXHAUST FAN EF3 AND MOTORIZED DAMPER SERVING LOUVER L3 BY CARBON MONOXIDE AND NITROUS OXIDE SENSORS IN SALLY PORT 170.
E48	CONTROL EXHAUST FAN EF2 AND MOTORIZED DAMPER SERVING LOUVER L2 BY CARBON MONOXIDE AND NITROUS OXIDE SENSORS IN SALLY PORT 170.
E49	FACTORY INSTALLED, FIELD POWERED RECEPTACLES. COORDINATE REQUIREMENTS WITH MECHANICAL CONTRACTOR.
M12	DISCHARGE 1" CONDENSATE AT ROOF DRAIN.
ME1	INSTALL ROOFTOP UNIT ON VIBRATION ISOLATION CURB COMPATIBLE WITH ROOFING SYSTEM. PROVIDE IN-CURB ACOUSTICAL SYSTEM. REFER TO ROOFTOP UNIT DETAIL.
ME2	INSTALL MINI-SPLIT HEAT PUMP/CONDENSING UNIT ON MIRO INDUSTRIES LD MECHANICAL UNIT SUPPORT OR EQUAL. SIZE PER MANUFACTURER'S RECOMMENDATIONS.
ME7	REFRIGERANT LIQUID AND SUCTION PIPING TO ASSOCIATED INDOOR UNIT.
ME8	1" TRAPPED CONDENSATE DRAIN TO ROOFTOP UNIT. VERIFY SIZE AND INSTALL PER MANUFACTURER'S INSTRUCTIONS.

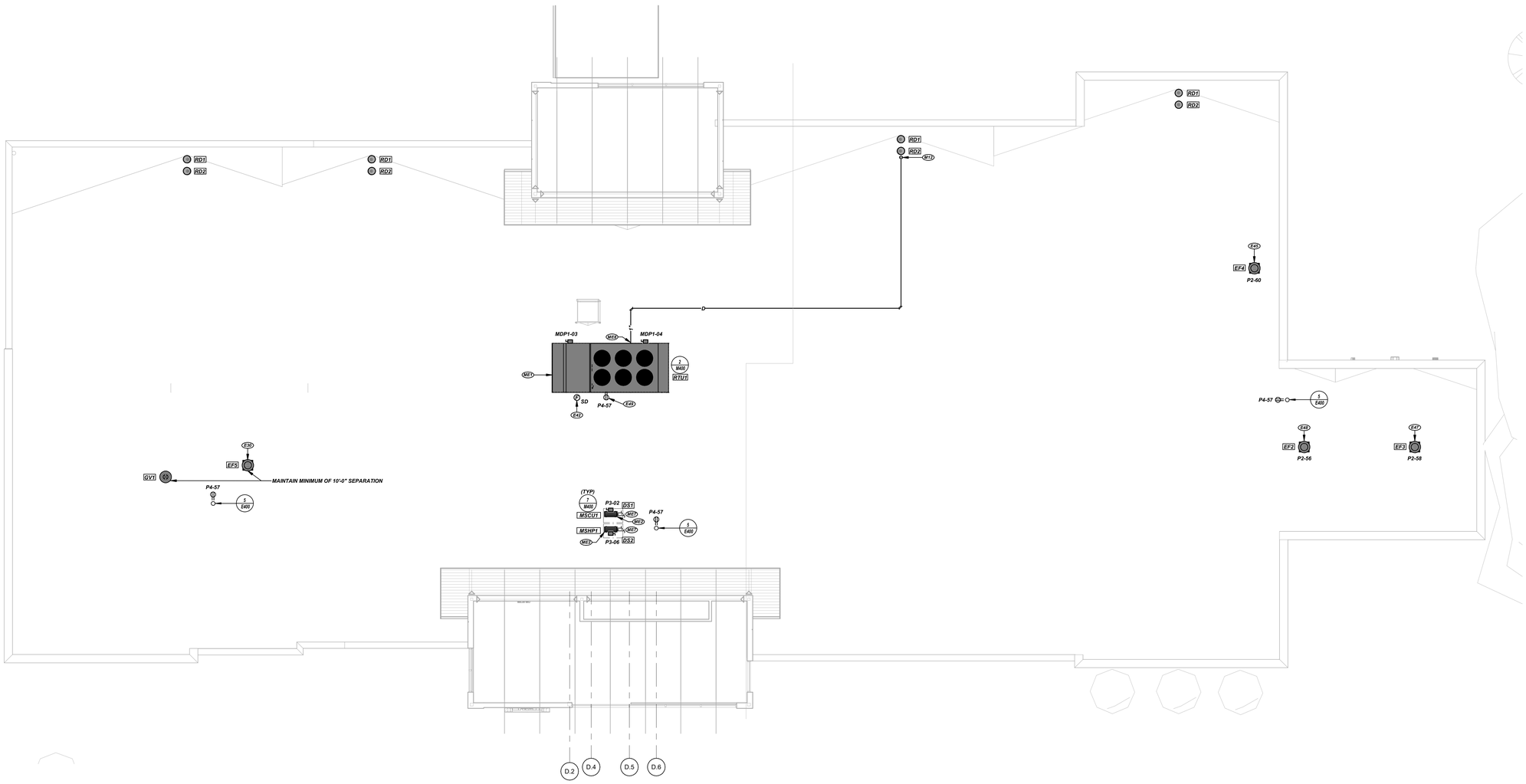

1 MECHANICAL AND ELECTRICAL ROOF PLAN
1/8" = 1'-0"
NORTH

NIXA POLICE DEPARTMENT

NORTH LEEANN DRIVE
NIXA, MO 65714

INSIGHT DESIGN IDeA ARCHITECTS
112 S. Main St., Nixa, MO 65714 Ph: 417-724-8553

CJD Engineering | Energy | Innovation
olsson

METTEMEYER ENGINEERING LLC

Chiodini ARCHITECTS
Architecture / Interior Design / Graphics
1401 S. Brentwood Blvd. / Suite 575 / St. Louis, Missouri 63144
314-725-5088 / arch@chiodini.com

Reissue Date

Professional of Record

STATE OF MISSOURI
ALLEN DAVIS
NUMBER
PE-2004017155
PROFESSIONAL ENGINEER

DATE 06.10.2025

Copyright 2025 ©
These prints are the property of the architect and shall be used only for the project referenced above

Drawn
QCJ

Project #
24-003

Date
2025.06.10

Drawing Title:
MECH/ELEC ROOF PLAN

Sheet:
ME101

CJD
Engineering | Energy | Innovation
2225 West Chesterfield Boulevard, Suite 200, Springfield, MO 65807
P: 417.877.1700 F: 417.324.7735 www.cjd-eng.com
Missouri State Certificate of Authority #200502690366

Special Notice: Drawings prepared by CJD Engineering LLC are instruments of service for use solely with respect to this project. CJD Engineering LLC shall be deemed the author and all common law, statutory law and other reserved rights including copyrights. This drawing shall not be reused in part or in full for any other work without prior written consent by and appropriate compensation to CJD Engineering LLC. Whosoever changes the design without prior written approval from CJD Engineering LLC, does so at their own risk and assumes full responsibility for any damages, liabilities or costs resulting directly or indirectly from such changes to the fullest extent of the law.

PRINTED: 6/10/2025 5:04:40 PM

UTILITY GENERAL NOTES:

GENERAL

1. THE CONTRACTOR SHALL CONTACT THE LOCAL ELECTRIC UTILITY COMPANY AND ARRANGE FOR SERVICE AS INDICATED ON DRAWINGS. ALL COSTS, CHARGES, FEES, ETC. INCURRED BY UTILITY COMPANY SHALL BE PAID BY OWNER. PROVIDE ALL MATERIALS AS REQUIRED BY LOCAL AUTHORITIES FOR ELECTRIC SERVICE INSTALLATION. ALL WORK SHALL BE IN ACCORDANCE REQUIREMENTS OF UTILITY COMPANY AND LOCAL AUTHORITIES.
2. THE CONTRACTOR SHALL CONTACT ALL OWNER SELECTED COMMUNICATIONS SERVICE VENDORS AND ARRANGE FOR SERVICES. THE OWNER SHALL BE RESPONSIBLE FOR ALL CHARHES, ETC. INCURRED BY THE SERVICE PROVIDER. THE CONTRACTOR SHALL PROVIDE ALL MATERIALS AS REQUIRED FOR SERVICE INSTALLATION AS INDICATED ON DRAWINGS. ALL WORK SHALL BE IN ACCORDANCE WITH THE REQUIREMENTS OF LOCAL AUTHORITIES.
3. THE CONTRACTOR SHALL BE RESPONSIBLE FOR ALL COORDINATION, FEES, PERMITS, ETC. REQUIRED FOR TEMPORARY UTILITY SERVICES.
4. REFER TO CIVIL DRAWINGS FOR INFORMATION REGARDING DOMESTIC WATER AND SANITARY SEWER UTILITY SERVICES.

KEYNOTES:

E8	JUNCTION BOX FOR POWERED GATES. FIELD COORDINATE EXACT LOCATION AND REQUIREMENTS WITH EQUIPMENT SUPPLIER.
E9	EXTEND (2) 3" COMMUNICATIONS SERVICE CONDUITS TO CONNECTION POINTS AS VERIFIED WITH OWNER SELECTED SERVICE PROVIDERS.
E17	PROVIDE JUNCTION BOX FOR GATE CONTROL. FIELD COORDINATE EXACT LOCATION AND REQUIREMENTS WITH EQUIPMENT SUPPLIER.
E19	PRIMARY ELECTRICAL CONDUIT AND CONDUCTORS PER UTILITY COMPANY STANDARDS. FIELD COORDINATE EXACT SOURCE OF PRIMARY WITH UTILITY COMPANY.
E23	TYPE PL3 FLOOD LIGHTING FIXTURES ARE SHOWN DIAGRAMMATICALLY. CONFIGURE AND INSTALL FOR AIMING AT FRONT OF BUILDING. FIELD AIM FIXTURES UNDER DIRECTION OF ARCHITECT.
E26	PROVIDE POWER TO INTERNALLY ILLUMINATED MONUMENT SIGN.
E40	POWER FOR GENERATOR BATTERY CHARGER.
E41	POWER FOR GENERATOR BLOCK HEATER.

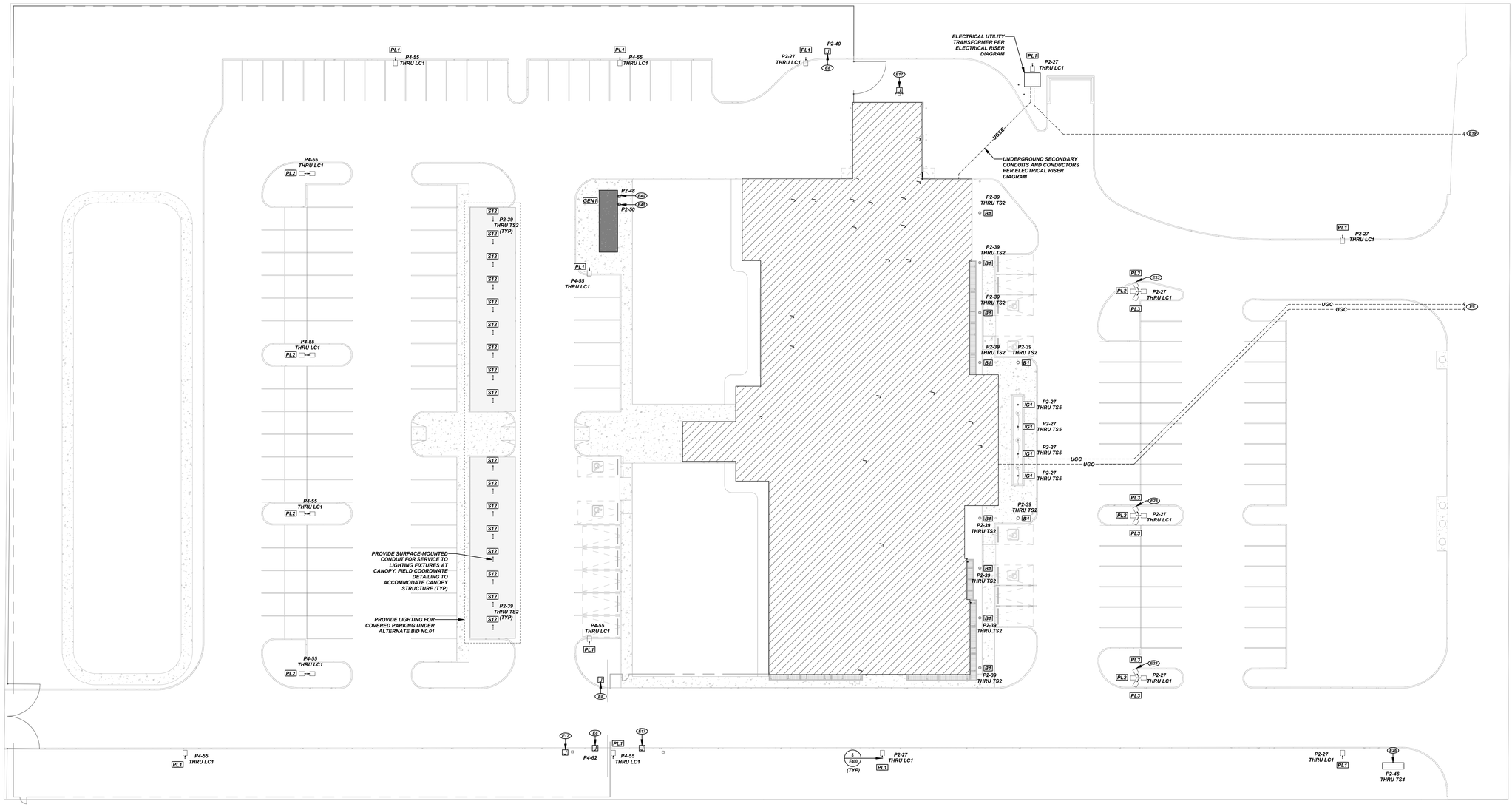

1 MECHANICAL AND ELECTRICAL SITE PLAN
1" = 20'-0"
NORTH

CJD
Engineering | Energy | Innovation
2225 West Chesterfield Boulevard, Suite 200, Springfield, MO 65807
P: 417.877.1700 F: 417.324.7735 www.cjd-eng.com
Missouri State Certificate of Authority #2005026903 66

Special Notice: Drawings prepared by CJD Engineering LLC are instruments of service for use solely with respect to this project. CJD Engineering LLC retains ownership and all common law, statutory law and other reserved rights including copyrights. This drawing shall not be reused in part or in full for any other work without prior written consent by and appropriate compensation to CJD Engineering LLC. Whoever changes the design without prior written approval from CJD Engineering LLC, does so at their own risk and assumes full responsibility for any damages, liabilities or costs resulting directly or indirectly from such changes to the fullest extent of the law.

NIXA POLICE DEPARTMENT

NORTH LEEANN DRIVE
NIXA, MO 65714

INSIGHT DESIGN IDeA ARCHITECTS
112 S. Main St., Nixa, MO 65714 Ph: 417-724-8553
CJD engineering | Energy | Innovation
olsson
METTEMEYER ENGINEERING LLC
Chiodini ARCHITECTS
Architecture / Interior Design / Graphics
1401 S. Brentwood Blvd. / Suite 975 / St. Louis, Missouri 63144
314-725-5580 / arch@chiodini.com

Reissue Date

Professional of Record

STATE OF MISSOURI
ALLEN DAVIS
NUMBER PE-2004017155
PROFESSIONAL ENGINEER

DATE 06.10.2025

Copyright 2025 ©
These prints are the property of the architect and shall be used only for the project referenced above

Drawn
JAR

Project #
24-003

Date
2025.06.10

Drawing Title:
MECH/ELEC SITE PLAN

Sheet:
ME201

PRINTED: 6/10/2025 5:13:07 PM

SPECIAL NOTE:

1. IN ROOMS/SPACES CONTAINING A SINGLE PANELBAORD-CIRCUIT NUMBER, ALL LIGHTING IN SAID ROOM SHALL BE POWERED BY DESIGNATED CIRCUIT.
2. ALL POWER PACKS FOR TAPE LIGHTING (CV FIXTURES) SHALL BE INSTALLED ABOVE ACCESSIBLE CEILINGS.
3. PROVIDE UNISTRUT AND ADDITIONAL ACCESSORIES AND COMPONENTS AS REQUIRED FOR SUPPORT OF FIXTURES SUSPENDED IN AREAS WITH EXPOSED STRUCTURE. LIGHTING FIXTURE ELEVATIONS SHALL BE AS DETERMINED BY ARCHITECT.
4. INSTALL OCCUPANCY SENSORS IN AREAS WITH EXPOSED STRUCTURE USING CONDUIT STEMS BETWEEN UPPER AND LOWER ELECTRICAL BOXES. SENSORS SHALL BE INSTALLED AT SAME ELEVATION AS ADJACTENT LIGHTING FIXTURES.
5. DOWNLIGHTING FIXTURES IN ACOUSTIC CEILING TILE SHALL BE INSTALLED IN THE CENTER OF 2x2 TILE.

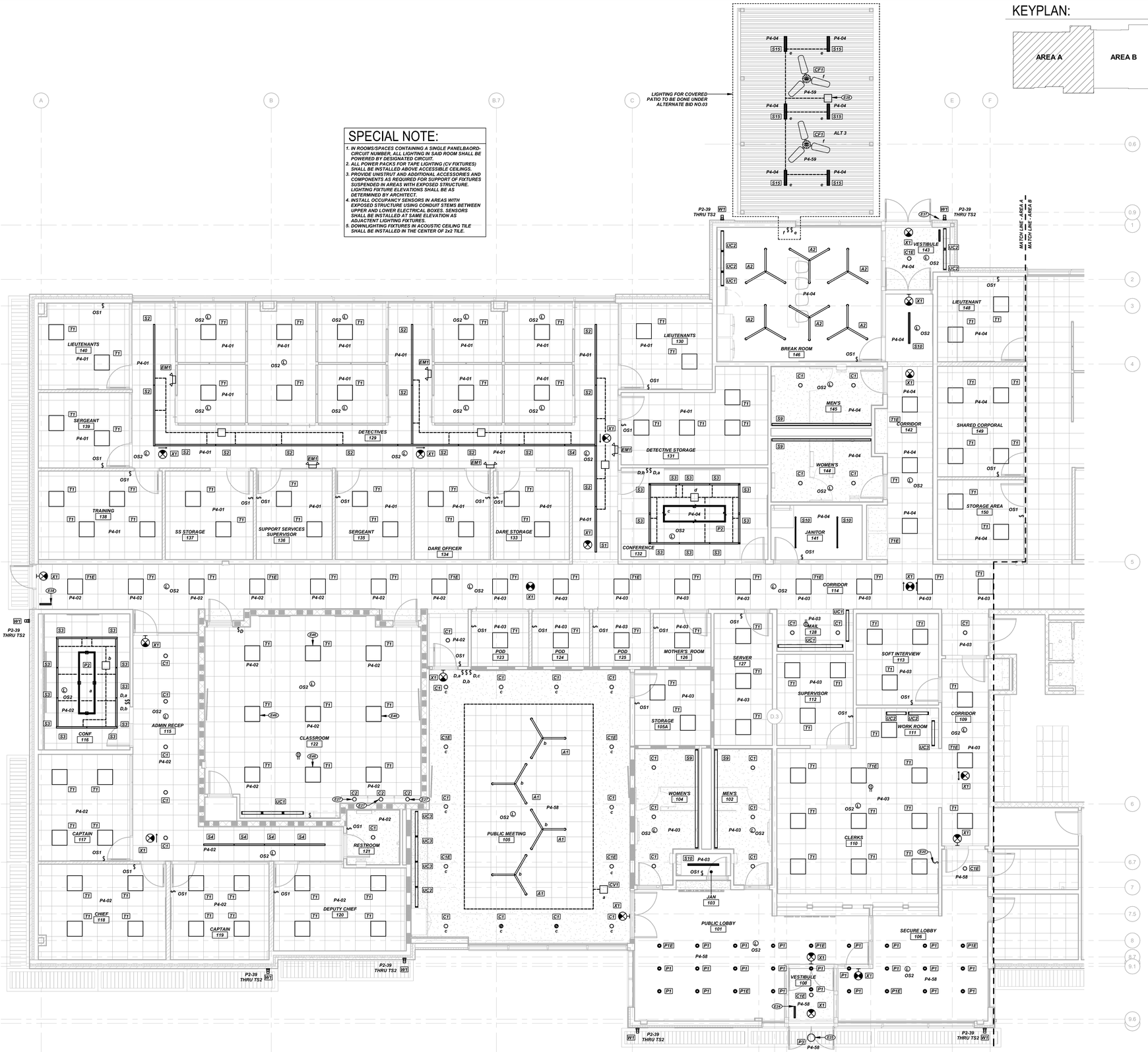

1 LIGHTING PLAN AREA A
3/16" = 1'-0"
NORTH

KEYPLAN:

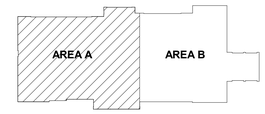

KEYNOTES:

E20 OVERRIDE SWITCH FOR LOBBY LIGHTING.
E24 INVERTER FOR EMERGENCY POWER TO TYPE P3 LIGHTING FIXTURES AT ENTRANCE CANOPIES: IOTA MODEL IS 25 I, 25-WATT, 120-VOLT. MOUNT INVERTER ABOVE INDOOR VESTIBULE.
E25 CIRCUIT THROUGH POWER INVERTER ABOVE ADJACENT VESTIBULE.
E27 PROVIDE PUCK LIGHTING IN CASING. REFER TO ARCHITECTURAL SECTIONS FOR FURTHER INSTRUCTION.
E28 MOUNT DRIVER TO PATIO STRUCTURE.
E37 INVERTER FOR EMERGENCY POWER TO TYPE W1 LIGHTING FIXTURES AT ENTRANCE CANOPIES: IOTA MODEL IS 50 I, 50-WATT, 120-VOLT. MOUNT INVERTER ABOVE INDOOR VESTIBULE.
E38 INVERTER FOR EMERGENCY POWER TO TYPE W1 LIGHTING FIXTURES AT ENTRANCE CANOPIES: IOTA MODEL IS 50 I, 50-WATT, 120-VOLT. MOUNT INVERTER ABOVE INDOOR CEILING.
E46 CIRCUIT THROUGH EMERGENCY INVERTER LOCATED IN ROOM 122 CLOSET.

NIXA POLICE DEPARTMENT

NORTH LEEANN DRIVE
NIXA, MO 65714

INSIGHT DESIGN IDeA ARCHITECTS
112 S. Main St., Nixa, MO 65714 Ph: 417-724-8553

CJD engineering | Energy | Innovation

olsson

METTEMEYER ENGINEERING LLC

Chiodini ARCHITECTS
Architecture / Interior Design / Graphics
1401 S. Brentwood Blvd. | Suite 570 | St. Louis, Missouri 63144
314-725-0888 | art@chiodini.com

Reissue Date

Professional of Record

STATE OF MISSOURI
JACK ALLEN DAVIS
NUMBER PE-2004017155
PROFESSIONAL ENGINEER

DATE 06.10.2025

Copyright 2025 ©
These prints are the property of the architect and shall be used only for the project referenced above

Drawn: JAR

Project #: 24-003

Date: 2025.06.10

Drawing Title: LIGHTING PLAN - AREA A

Sheet: E101

CJD
Engineering | Energy | Innovation
2225 West Chesterfield Boulevard, Suite 200, Springfield, MO 65807
P: 417.877.1700 F: 417.324.7735 www.cjd-eng.com
Missouri State Certificate of Authority #2005026690366

Special Notice: Drawings prepared by CJD Engineering LLC are instruments of service for use solely with respect to this project. CJD Engineering LLC retains ownership and all common law, statutory law and other reserved rights including copyrights. This drawing shall not be reused in part or in full for any other work without prior written consent by and appropriate compensation to CJD Engineering LLC. Whoever changes the design without prior written approval from CJD Engineering LLC, does so at their own risk and assumes full responsibility for any damages, liabilities or costs resulting directly or indirectly from such changes to the fullest extent of the law.

PRINTED: 6/10/2025 5:12:56 PM

KEYPLAN:

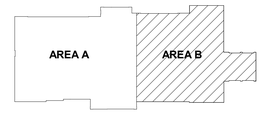

KEYNOTES:

E39 INVERTER FOR EMERGENCY POWER TO TYPE W1 LIGHTING FIXTURES AT ENTRANCE CANOPIES: IOTA MODEL IIS 50 L 50-WATT, 120-VOLT. MOUNT INVERTER ON INDOOR WALL.

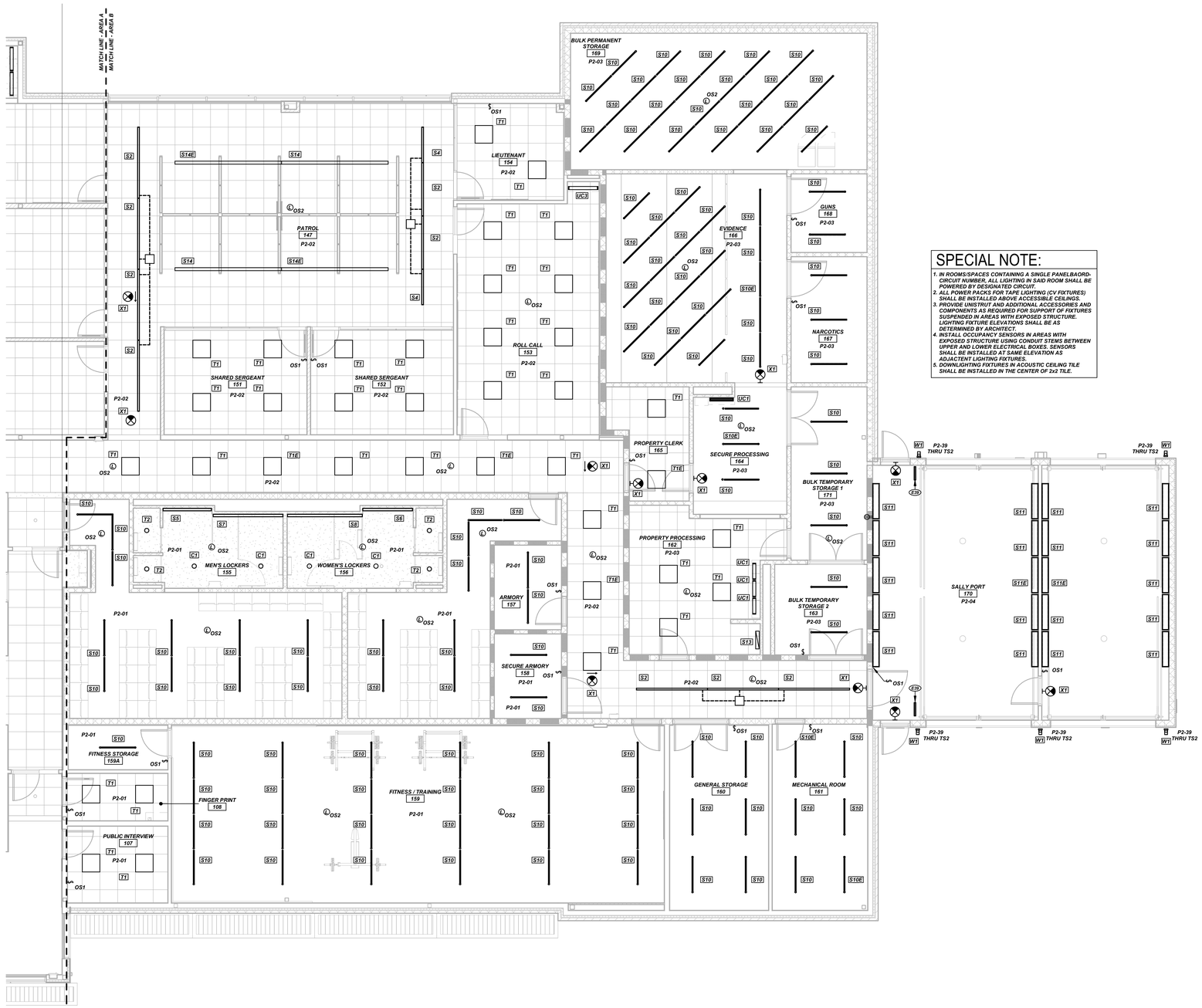

SPECIAL NOTE:

1. IN ROOMS/SPACES CONTAINING A SINGLE PANELBAORD-CIRCUIT NUMBER, ALL LIGHTING IN SAID ROOM SHALL BE POWERED BY DESIGNATED CIRCUIT.
2. ALL POWER PACKS FOR TAPE LIGHTING (CV FIXTURES) SHALL BE INSTALLED ABOVE ACCESSIBLE CEILINGS.
3. PROVIDE UNISTRUT AND ADDITIONAL ACCESSORIES AND COMPONENTS AS REQUIRED FOR SUPPORT OF FIXTURES SUSPENDED IN AREAS WITH EXPOSED STRUCTURE. LIGHTING FIXTURE ELEVATIONS SHALL BE AS DETERMINED BY ARCHITECT.
4. INSTALL OCCUPANCY SENSORS IN AREAS WITH EXPOSED STRUCTURE USING CONDUIT STEMS BETWEEN UPPER AND LOWER ELECTRICAL BOXES. SENSORS SHALL BE INSTALLED AT SAME ELEVATION AS ADJACTENT LIGHTING FIXTURES.
5. DOWNLIGHTING FIXTURES IN ACOUSTIC CEILING TILE SHALL BE INSTALLED IN THE CENTER OF 2x2 TILE.

1 LIGHTING PLAN AREA B
3/16" = 1'-0"
NORTH

NIXA POLICE DEPARTMENT

NORTH LEEANN DRIVE
NIXA, MO 65714

INSIGHT DESIGN IDeA ARCHITECTS
112 S. Main St., Nixa, MO 65714 Ph: 417-724-8553

CJD engineering | Energy | Innovation

olsson

METTEMEYER ENGINEERING LLC

Chidini ARCHITECTS
Architecture / Interior Design / Graphics
1401 S. Brentwood Blvd. / Suite 575 / St. Louis, Missouri 63144
314-725-5080 | arch@chidini.com

Reissue Date

Professional of Record

STATE OF MISSOURI
JACK ALLEN DAVIS
NUMBER PE-2004017155
PROFESSIONAL ENGINEER

DATE 06.10.2025

Copyright 2025 ©
These prints are the property of the architect and shall be used only for the project referenced above

Drawn
JAR

Project #
24-003

Date
2025.06.10

Drawing Title:
LIGHTING PLAN - AREA B

Sheet:
E102

CJD
Engineering | Energy | Innovation
2225 West Chesterfield Boulevard, Suite 200, Springfield, MO 65807
P: 417.877.1700 F: 417.324.7735 www.cjd-eng.com
Missouri State Certificate of Authority #2005026290366

Warning: Drawings and specifications are instruments of service through the completion of the engineer's services. CJD Engineering LLC retains ownership and all common law, statutory law and other reserved rights including copyrights. This drawing shall not be reused in part or in full for any other work without prior written consent by and appropriate compensation to CJD Engineering LLC. Whoever changes the design without prior written approval from CJD Engineering LLC, does so at their own risk and assumes full responsibility for any damages, liabilities or costs resulting directly or indirectly from such changes to the fullest extent of the law.

PRINTED: 6/10/2025 5:04:25 PM

KEYPLAN:

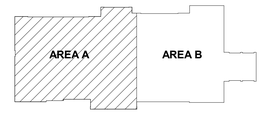

KEYNOTES:

E1	AREA SMOKE DETECTOR AT BOTTOM OF ROOF DECK NEAR RETURN FVAV UNIT.
E10	PROVIDE POWER FOR EXTERIOR SIGNAGE. FIELD COORDINATE EXACT ROUGH-IN LOCATION AND REQUIREMENTS WITH SIGNAGE PROVIDER.
E12	CONDUIT TO MDP2 PER ELECTRICAL RISER DIAGRAM.
E14	18"x18"x24" DEEP IN GRADE UTILITY VAULT Y QUAZITE OR EQUIVALENT. ASSOCIATED CONDUIT SHALL SERVE BE CONFIGURED SUCH THAT BOX MAY BE REMOVED AND CONDUIT MAT BE EXTENDED FOR SERVICE FOR FUTURE BUILDING ADDITION.
E22	PROVIDE JUNCTION BOX FOR POWER OF LIT MIRRORS.
E29	PROVIDE MYERS 1-01-5-R120-BA3051 EMERGENCY INVERTER FOR EMERGENCY FIXTURES IN CLASSROOM 122 AND EXHAST FAN EF6 ON ROOF.
E30	CIRCUIT THROUGH EMERGENCY INVERTER LOCATED IN ROOM 122 CLOSET. CONTROL VIA SWITCH IN ROOM 122.
E31	PROVIDE POWER TO FLOOR BOX. REFER TO TECHNOLOGY DRAWINGS FOR EXACT LOCATION AND REQUIREMENTS.
E32	DOUBLE GANG JUNCTION BOX AT 42" O.C. A.F.F. FOR ADA DOOR OPERATOR PUSH-BUTTON. PROVIDE 0.75" CONDUIT TO OPERATOR. CONTROL WIRING BY OPERATOR INSTALLER.
E35	DOUBLE GANG JUNCTION BOX FOR ADA DOOR OPERATOR FOR CONTROL WIRING AND POWER. PROVIDE 0.75" CONDUIT(S) BETWEEN OPERATOR(S). CONTROL WIRING BY OPERATOR INSTALLER.
E36	ABOVE COUNTER SWITCH FOR CONTROL OF GARBAGE DISPOSAL.
E44	SWITCH FOR CONTROL OF EXHAUST FAN EF5 AND MOTORIZED DAMPER SERVING GV1.
E51	PROVIDE JUNCTION BOX FOR DOOR HARDWARE POWER SUPPLY. COORDINATE EXACT LOCATION AND REQUIREMENTS WITH SUPPLIER.

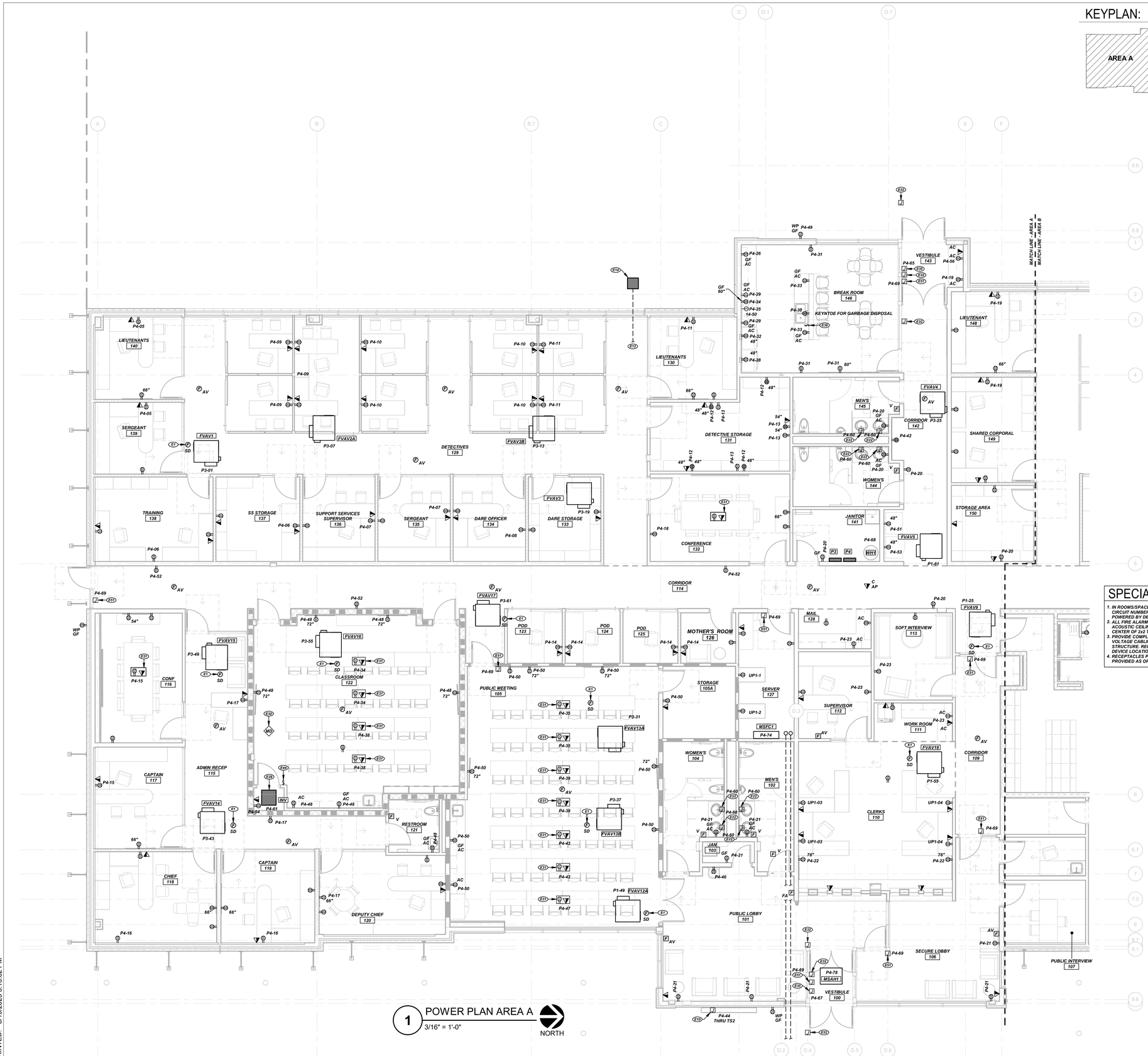

1 POWER PLAN AREA A
3/16" = 1'-0"
NORTH

SPECIAL NOTE:

1. IN ROOMS/SPACES CONTAINING A SINGLE PANELBAORD-CIRCUIT NUMBER, ALL LIGHTING IN SAID ROOM SHALL BE POWERED BY DESIGNATED CIRCUIT.
2. ALL FIRE ALARM DEVICES AND SPEAKERS INSTALLED IN ACOUSTIC CEILING TILE SHALL BE INSTALLED IN THE CENTER OF 2x2 TILE.
3. PROVIDE COMPLETE CONDUIT PATH FOR ALL LOW VOLTAGE CABLING INSTALLED AT AREAS WITH EXPOSED STRUCTURE. REFER TO TECHNOLOGY DRAWINGS FOR DEVICE LOCATIONS AND ROUGH-IN REQUIREMENTS.
4. RECEPTACLES POWERED BY UPS SYSTEM TO BE PROVIDED AS ORANGE IN COLOR.

NIXA POLICE DEPARTMENT

NORTH LEEANN DRIVE
NIXA, MO 65714

INSIGHT DESIGN IDeA ARCHITECTS
112 S. Main St., Nixa, MO 65714 Ph: 417-724-8553

CJD engineering | Energy | Innovation

olsson

METTEMEYER ENGINEERING LLC

Chiodini ARCHITECTS
Architecture / Interior Design / Graphics
1401 S. Brentwood Blvd. / Suite 570 / St. Louis, Missouri 63144
314-725-5888 | art@chiodini.com

Reissue Date

Professional of Record

STATE OF MISSOURI
JAREN ALLEN DAVIS
NUMBER PE-2004017155
PROFESSIONAL ENGINEER

DATE 06.10.2025

Copyright 2025 ©

These prints are the property of the architect and shall be used only for the project referenced above

Drawn: JAR

Project #: 24-003

Date: 2025.06.10

Drawing Title: POWER PLAN - AREA A

Sheet: E201

CJD Engineering | Energy | Innovation
2225 West Chesterfield Boulevard, Suite 200, Springfield, MO 65807
P: 417.877.1700 F: 417.324.7735 www.cjd-eng.com
Missouri State Certificate of Authority #200502690366

General Notice: Drawings prepared by CJD Engineering LLC and instruments of service for use solely with respect to this project. CJD Engineering LLC retains ownership and all common law, statutory law and other reserved rights including the copyright thereto. These drawings and specifications may not be altered without the express consent by and appropriate compensation to CJD Engineering LLC. Whoever changes the design without prior written approval from CJD Engineering LLC, does so at their own risk and assumes full responsibility for any damages, liabilities or costs resulting directly or indirectly from such changes to the fullest extent of the law.

PRINTED: 6/10/2025 5:13:02 PM

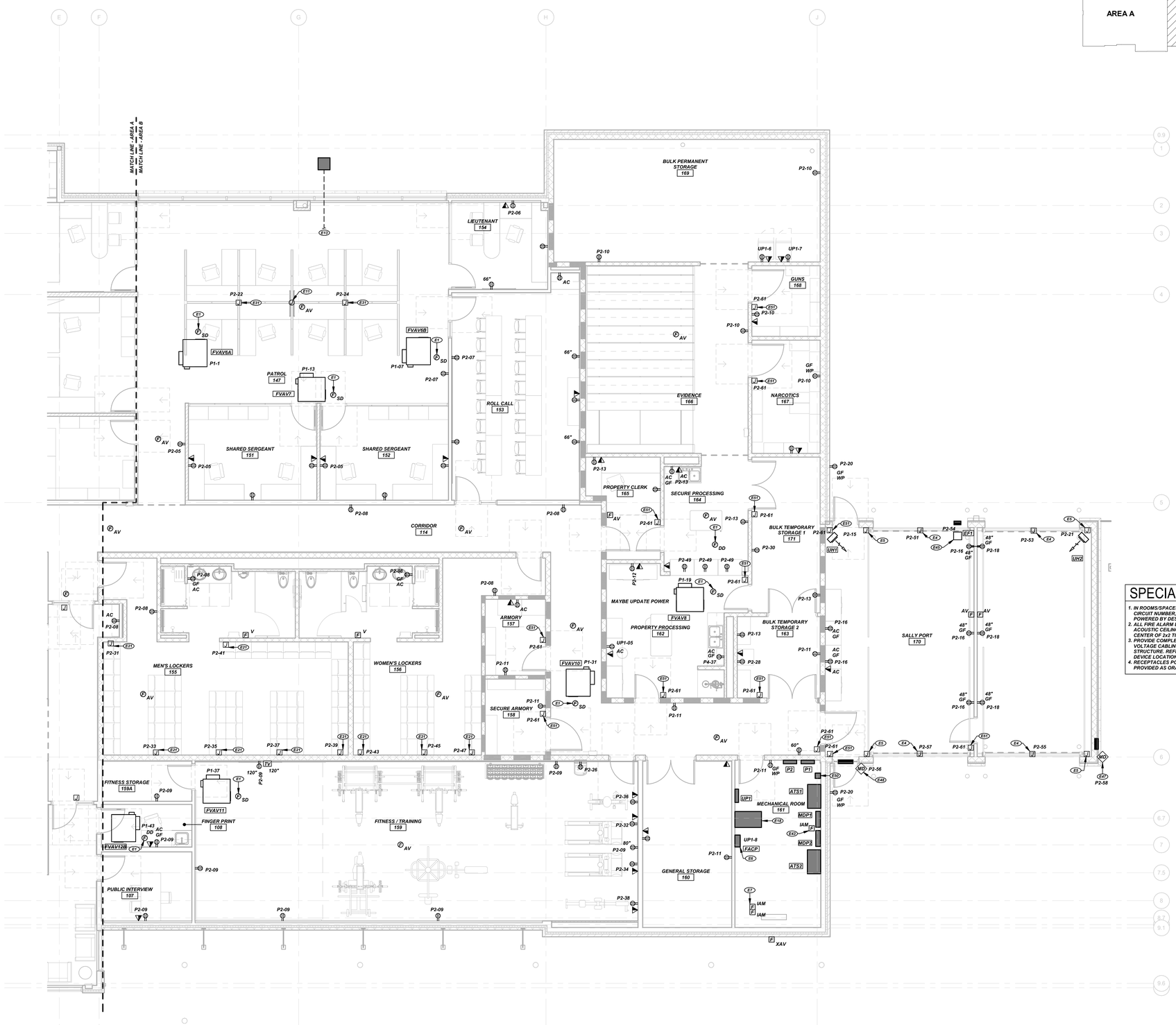

1 POWER PLAN AREA B
3/16" = 1'-0"
NORTH

KEYPLAN:

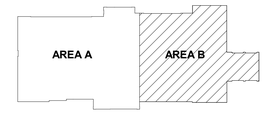

KEYNOTES:

E1	AREA SMOKE DETECTOR AT BOTTOM OF ROOF DECK NEAR RETURN FVAV UNIT.
E4	JUNCTION BOX FOR OVERHEAD DOOR POWER. COORDINATE LOCATION AND REQUIREMENTS WITH EQUIPMENT SUPPLIER.
E5	JUNCTION BOX FOR OVERHEAD DOOR CONTROLS. COORDINATE LOCATION AND REQUIREMENTS WITH EQUIPMENT SUPPLIER.
E6	COORDINATE FOR INSTALLATION OF DEDICATED TELEPHONE LINES FOR MONITORING OF FIRE ALARM PANEL.
E7	FIRE ALARM RELAYS FOR MONITORING OF FIRE SPRINKLER SYSTEM FLOW AND TAMPER SWITCHES. FIELD COORDINATE EXACT LOCATION, QUANTITIES, AND REQUIREMENTS WITH FIRE SPRINKLER CONTRACTOR.
E11	CEILING MOUNTED JUNCTION BOX FOR TV POWER.
E13	CONDUIT TO MDP1 PER ELECTRICAL RISER DIAGRAM.
E18	PROVIDE UPS FOR CONTINUOUS POWER OF CRITICAL SYSTEMS. UPS SHALL BE "VERTIV APM2 UPS", 30 kVA, 120/208 VAC, 60-Hz 3-PHASE.
E21	PROVIDE JUNCTION BOX FOR LOCKER POWER. COORDINATE EXACT LOCATION AND REQUIREMENTS WITH LOCKER EQUIPMENT SUPPLIER.
E31	PROVIDE POWER TO FLOOR BOX. REFER TO TECHNOLOGY DRAWINGS FOR EXACT LOCATION AND REQUIREMENTS.
E43	FIRE ALARM RELAY FOR CONTROL OF SHUNT-TRIP CIRCUIT BREAKERS IN PANELBOARDS MDP1 AND MDP2 SERVING PANELBOARDS P1 AND P3.
E45	CIRCUIT FAN FOR CONTINUOUS OPERATION.
E47	CONTROL EXHAUST FAN EF3 AND MOTORIZED DAMPER SERVING LOUVER L3 BY CARBON MONOXIDE AND NITROUS OXIDE SENSORS IN SALLY PORT 170.
E48	CONTROL EXHAUST FAN EF2 AND MOTORIZED DAMPER SERVING LOUVER L2 BY CARBON MONOXIDE AND NITROUS OXIDE SENSORS IN SALLY PORT 170.
E50	TIME SWITCHES TS1, TS2, TS3, TS4, TS5 AND LIGHTING CONTACTOR LC1 STACKED ON WALL.
E51	PROVIDE JUNCTION BOX FOR DOOR HARDWARE POWER SUPPLY. COORDINATE EXACT LOCATION AND REQUIREMENTS WITH SUPPLIER.

SPECIAL NOTE:

1. IN ROOMS/SPACES CONTAINING A SINGLE PANELBAORD-CIRCUIT NUMBER, ALL LIGHTING IN SAID ROOM SHALL BE POWERED BY DESIGNATED CIRCUIT.
2. ALL FIRE ALARM DEVICES AND SPEAKERS INSTALLED IN ACOUSTIC CEILING TILE SHALL BE INSTALLED IN THE CENTER OF 2x2 TILE.
3. PROVIDE COMPLETE CONDUIT PATH FOR ALL LOW VOLTAGE CABLING INSTALLED AT AREAS WITH EXPOSED STRUCTURE. REFER TO TECHNOLOGY DRAWINGS FOR DEVICE LOCATIONS AND ROUGH-IN REQUIREMENTS.
4. RECEPTACLES POWERED BY UPS SYSTEM TO BE PROVIDED AS ORANGE IN COLOR.

NIXA POLICE DEPARTMENT

NORTH LEEANN DRIVE
NIXA, MO 65714

INSIGHT DESIGN IDeA ARCHITECTS
112 S. Main St., Nixa, MO 65714 Ph: 417-724-8553

CJD engineering | Energy | Innovation

olsson

METTEMEYER ENGINEERING LLC

Christini ARCHITECTS
Architecture / Interior Design / Graphics
1401 S. Brentwood Blvd. | Suite 570 | St. Louis, Missouri 63144
314-254-3080 | arch@christini.com

Reissue Date

Professional of Record

STATE OF MISSOURI
ALLEN DAVIS
NUMBER
PE-2004017155
PROFESSIONAL ENGINEER

DATE 06.10.2025

Copyright 2025 ©

These prints are the property of the architect and shall be used only for the project referenced above

Drawn
JAR

Project #
24-003

Date
2025.06.10

Drawing Title:
POWER PLAN - AREA B

Sheet:
E202

CJD
Engineering | Energy | Innovation
2225 West Chesterfield Boulevard, Suite 200, Springfield, MO 65807
P: 417.877.1700 F: 417.324.7735 www.cjd-eng.com
Missouri State Certificate of Authority #200502690366

Special Notice: Drawings prepared by CJD Engineering LLC are instruments of service for use solely with respect to this project. CJD Engineering LLC does not convey the rights of ownership in or to the drawings or models, but retains all ownership rights. This drawing shall not be reused in part or in full for any other work without prior written consent and appropriate compensation to CJD Engineering LLC. Whoever changes the design without prior written approval from CJD Engineering LLC, does so at their own risk and assumes full responsibility for any damages, liabilities or costs resulting directly or indirectly from such changes to the fullest extent of the law.

PRINTED: 6/10/2025 5:04:33 PM

PANELBOARD SCHEDULE — P4

VOLTAGE: 120/208	POLES: 84	MOUNTING: SURFACE	ENCLOSURE: NEMA 1		
PHASE / WIRE: 3 / 4	KAIC AMPS (RMS): 18	LOCATION: JANITOR 141	MANUFACTURER: SQUARE D		
AMPS: 400	MAIN BREAKER / MLO: MLO	FED FROM: MDP2	MODEL: NQ		

CIRC. NO.	WIRE	EQUIPMENT SERVED	C/B AMPS	C/B POLES	C/B ACC.	LOAD (VA)	PHASE LOADS (VA) A	B	C	LOAD (VA)	C/B ACC.	C/B POLES	C/B AMPS	EQUIPMENT SERVED	WIRE	CIRC. NO.
1	(2)#12,#12G, 0.5"C	SOUTHWEST LIGHTING	20	1	-	1845	3465			1620	-	1	20	SOUTHEAST LIGHTING	(2)#12,#12G, 0.5"C	2
3	(2)#12,#12G, 0.5"C	CENTRAL EAST LIGHTING	20	1	-	1100		2345		1245	-	1	20	CENTRAL WEST LIGHTING	(2)#12,#12G, 0.5"C	4
5	(2)#12,#12G, 0.5"C	OFFICE RECEPTACLES	20	1	-	720			1620	900	-	1	20	OFFICE RECEPTACLES	(2)#12,#12G, 0.5"C	6
7	(2)#12,#12G, 0.5"C	OFFICE RECEPTACLES	20	1	-	720	1440			720	-	1	20	OFFICE RECEPTACLES	(2)#12,#12G, 0.5"C	8
9	(2)#12,#12G, 0.5"C	OFFICE RECEPTACLES	20	1	-	720		1440		720	-	1	20	OFFICE RECEPTACLES	(2)#12,#12G, 0.5"C	10
11	(2)#12,#12G, 0.5"C	OFFICE RECEPTACLES	20	1	-	720			2160	1440	-	1	20	DETECTIVE STORAGE	(2)#12,#12G, 0.5"C	12
13	(2)#12,#12G, 0.5"C	DETECTIVE STORAGE	20	1	-	900	1800			900	-	1	20	POD RECEPTACLES	(2)#12,#12G, 0.5"C	14
15	(2)#12,#12G, 0.5"C	OFFICE RECEPTACLES	20	1	-	1080		2340		1260	-	1	20	OFFICE RECEPTACLES	(2)#12,#12G, 0.5"C	16
17	(2)#12,#12G, 0.5"C	OFFICE RECEPTACLES	20	1	-	1080			1800	720	-	1	20	CONFERENCE RECEPTACLES	(2)#12,#12G, 0.5"C	18
19	(2)#12,#12G, 0.5"C	OFFICE RECEPTACLES	20	1	-	1260	2520			1260	-	1	20	GENERAL RECEPTACLES	(2)#12,#12G, 0.5"C	20
21	(2)#12,#12G, 0.5"C	GENERAL RECEPTACLES	20	1	-	1260		1620		360	-	1	20	CLERK RECEPTACLES	(2)#12,#12G, 0.5"C	22
23	(2)#12,#12G, 0.5"C	OFFICE RECEPTACLES	20	1	-	1260			2460	1200	-	1	20	BREAKROOM MICROWAVE	(2)#12,#12G, 0.5"C	24
25	(3)#8,#10G, 0.75"C	RANGE	50	2	-	4200	5200			1000	-	1	20	BREAKROOM COFFEE MAKER	(2)#12,#12G, 0.5"C	26
27		"				4200		5400		1200	-	1	20	BREAKROOM REFRIGERATOR	(2)#12,#12G, 0.5"C	28
29	(2)#12,#12G, 0.5"C	BREAKROOM RECEPTACLES	20	1	-	800			1800	1000	GFCI	1	20	BREAKROOM GARBAGE DISPOSAL	(2)#12,#12G, 0.5"C	30
31	(2)#12,#12G, 0.5"C	BREAKROOM RECEPTACLES	20	1	-	800	1880			1080	-	1	20	BREAKROOM REFRIGERATIR	(2)#12,#12G, 0.5"C	32
33	(2)#12,#12G, 0.5"C	BREAKROOM RECEPTACLES	20	1	-	800		1800		1000	-	1	20	CLASSROOM 122 WORKDESKS	(2)#12,#12G, 0.5"C	34
35	(2)#12,#12G, 0.5"C	PUBLIC MEETING 105 WORKDESK	20	1	-	1440			2520	1080	-	1	20	CLASSROOM 122 WORKDESKS	(2)#12,#12G, 0.5"C	36
37		SPARE	20	1	-		1080			1080	-	1	20	CLASSROOM 122 WORKDESKS	(2)#12,#12G, 0.5"C	38
39	(2)#12,#12G, 0.5"C	PUBLIC MEETING 105 WORKDESK	20	1	-	1440		2520		1080	-	1	20	CLASSROOM 122 WORKDESKS	(2)#12,#12G, 0.5"C	40
41		SPARE	20	1	-				360	360	GFCI	1	20	DRINKING FOUNTAIN	(2)#12,#12G, 0.5"C	42
43	(2)#12,#12G, 0.5"C	PUBLIC MEETING 105 WORKDESK	20	1	-	1440	2940			1500	-	1	20	BUILDING SIGNAGE	(2)#12,#12G, 0.5"C	44
45		SPARE	20	1	-			180		180	GFCI	1	20	DRINKING FOUNTAIN	(2)#12,#12G, 0.5"C	46
47		SPARE	20	1	-				1260	1260	-	1	20	CLASSROOM 122 RECEPTACLES	(2)#12,#12G, 0.5"C	48
49	(2)#12,#12G, 0.5"C	EXTERIOR RECEPTACLES	20	1	-	540	2160			1620	-	1	20	PUBLIC MEETING 105 RECEPTACLES	(2)#12,#12G, 0.5"C	50
51	(2)#12,#12G, 0.5"C	VENDING MACHINE RECEPTACLES	20	1	GFCI	1000		1540		540	-	1	20	CORRIDOR RECEPTACLES	(2)#12,#12G, 0.5"C	52
53	(2)#12,#12G, 0.5"C	VENDING MACHINE RECEPTACLES	20	1	GFCI	1000			2000	1000	-	1	20	ON-THE-GO COMMAND CENTER	(2)#12,#12G, 0.5"C	54
55	(2)#10,#10G, 0.75"C	SITE LIGHTING	20	2	-	770	1270			500	-	1	20	CLOCK IN SYSTEM	(2)#12,#12G, 0.5"C	56
57		"				770		2270		1500	-	1	20	LOBBBY/PUBIC MEETING LIGHTING	(2)#12,#12G, 0.5"C	58
59	(2)#12,#12G, 0.5"C	OUTDOOR FANS	20	1	-	1000			2000	1000	-	1	20	BATHROOM MIRRORS	(2)#12,#12G, 0.5"C	60
61	(2)#8,#10G, 0.75"C	STORM SHELTER INVERTER	35	1	-	1750	2355			605	-	3	20	GATE MOTOR		62
63	(2)#12,#12G, 0.5"C	OUTSIDE LIGHTING	20	1	-	580		1185		605				"	(3)#10,#10G, 0.75"C	64
65	(2)#12,#12G, 0.5"C	ADA DOOR OPERATOR	20	1	-	1000			1605	605				"		66
67	(2)#12,#12G, 0.5"C	ADA DOOR OPERATOR	20	1	-	1000	1500			500	-	3	20	WATER HEATER WH1		68
69		SPARE	20	1	-			500		500				"	(3)#12,#12G, 0.5"C	70
71		SPARE	20	1	-				500	500				"		72
73		SPARE	20	1	-		1875			1875	-	2	20	MINI-SPLIT SYSTEM MSFC1	(2)#12,#12G, 0.5"C	74
75		SPARE	20	1	-			1875		1875				"		76
77		SPARE	20	1	-				1875	1875	-	2	20	MINI-SPLIT SYSTEM MSAH1	(2)#12,#12G, 0.5"C	78
79		SPARE	20	1	-		1875			1875				"		80
81		SPARE	20	1	-						-	1	20	SPARE		82
83		SPARE	20	1	-						-	1	20	SPARE		84

ENCLOSURE ACCESSORIES: CH,FL   PANELBOARD ACCESSORIES: GB,CBB

CIRCUIT BREAKER ACCESSORIES:
AC - AUXILLIARY CONTACTS
EO - ELECTRICAL OPERATOR
GFCI - GROUND-FAULT INTERRUPTING
HACR - HACR RATING
HLF - HANDLE LOCK-OFF
HLN - HANDLE LOCK-ON
SR - SWITCH RATING
ST - SHUNT TRIP

ENCLOSURE ACCESSORIES:
CH - CONCEALED HINGE
CW - COLUMN WIDTH PANEL
DWD - HINDGED DOOR WITHIN HINGED DOOR
EGT - EXTENDED GUTTER TOP
EGB - EXTENDED GUTTER BOTTOM
EGSL - EXTENDED GUTTER LEFT HAND SIDE
EGSR - EXTENDED GUTTER RIGHT HAND SIDE
FL - FLUSH LOCK(S)

PANELBOARD ACCESSORIES
CL - COMPRESSION LUGS
FTL - FEED-THRU LUGS
GB - EQUIPMENT GROUND BAR KIT
GBI - GROUND BAR INSULATOR KIT
NBK - NEUTRAL BONDING KIT
PS - PREPARED CIRCUIT BREAKER SPACE
SB - SPLIT BUS
SER - SERVICE ENTRANCE RATING
SFB - SUB-FEED CIRCUIT BREAKER
SFL - SUB-FEED LUGS
CBB - TIN PLATED COPPER BUS BARS
ABB - TIN PLATED ALUMINUM BUS BARS
TRN - 200% RATED NEUTRAL BUS BAR
TVSS - TRANSIENT VOLTAGE SURGE SUPPRESSION

PANELBOARD SCHEDULE — P3

VOLTAGE: 120/208	POLES: 72	MOUNTING: SURFACE	ENCLOSURE: NEMA 1		
PHASE / WIRE: 3 / 4	KAIC AMPS (RMS): 18	LOCATION: JANITOR 141	MANUFACTURER: SQUARE D		
AMPS: 400	MAIN BREAKER / MLO: MLO	FED FROM: MDP2	MODEL: NQ		

CIRC. NO.	WIRE	EQUIPMENT SERVED	C/B AMPS	C/B POLES	C/B ACC.	LOAD (VA)	PHASE LOADS (VA) A	B	C	LOAD (VA)	C/B ACC.	C/B POLES	C/B AMPS	EQUIPMENT SERVED	WIRE	CIRC. NO.
1		FAN POWERED VAV FVAV1	15	3	-	1790	1790				-	1	20	SPARE		2
3	(3)#12,#12G, 0.5"C	"				1790		1790			-	1	20	SPARE		4
5		"				1790			1790		-	1	20	SPARE		6
7		FAN POWERED VAV FVAV2A	25	3	-	2835	2835				-	1	20	SPARE		8
9	(3)#10,#10G, 0.75"C	"				2835		2835			-	1	20	SPARE		10
11		"				2835			2835		-	1	20	SPARE		12
13		FAN POWERED VAV FVAV2B	25	3	-	2835	2835				-	1	20	SPARE		14
15	(3)#10,#10G, 0.75"C	"				2835		2835			-	1	20	SPARE		16
17		"				2835			2835		-	1	20	SPARE		18
19		FAN POWERED VAV FVAV3	15	3	-	1590	1590				-	1	20	SPARE		20
21	(3)#12,#12G, 0.5"C	"				1590		1590			-	1	20	SPARE		22
23		"				1590			1590		-	1	20	SPARE		24
25		FAN POWERED VAV FVAV4	35	3	-	3890	3890				-	1	20	SPARE		26
27	(3)#8,#10G, 0.75"C	"				3890		3890			-	1	20	SPARE		28
29		"				3890			3890		-	1	20	SPARE		30
31		FAN POWERED VAV FVAV13A	20	3	-	2210	2210				-	1	20	SPARE		32
33	(3)#12,#12G, 0.5"C	"				2210		2210			-	1	20	SPARE		34
35		"				2210			2210		-	1	20	SPARE		36
37		FAN POWERED VAV FVAV13B	20	3	-	2210	2210				-	1	20	SPARE		38
39	(3)#12,#12G, 0.5"C	"				2210		2210			-	1	20	SPARE		40
41		"				2210			2210		-	1	20	SPARE		42
43		FAN POWERED VAV FVAV14	15	3	-	1790	1790				-	1	20	SPARE		44
45	(3)#12,#12G, 0.5"C	"				1790		1790			-	1	20	SPARE		46
47		"				1790			1790		-	1	20	SPARE		48
49		FAN POWERED VAV FVAV15	20	3	-	2210	2210				-	1	20	SPARE		50
51	(3)#12,#12G, 0.5"C	"				2210		2210			-	1	20	SPARE		52
53		"				2210			2210		-	1	20	SPARE		54
55		FAN POWERED VAV FVAV16	30	3	-	3450	3450				-	1	20	SPARE		56
57	(3)#10,#10G, 0.75"C	"				3450		3450			-	1	20	SPARE		58
59		"				3450			3450		-	1	20	SPARE		60
61		FAN POWERED VAV FVAV17	20	3	-	2010	2010				-	1	20	SPARE		62
63	(3)#12,#12G, 0.5"C	"				2010		2010			-	1	20	SPARE		64
65		"				2010			2010		-	1	20	SPARE		66
67		SPARE	20	1	-						-	1	20	SPARE		68
69		SPARE	20	1	-						-	1	20	SPARE		70
71		SPARE	20	1	-						-	1	20	SPARE		72

ENCLOSURE ACCESSORIES: CH,FL   PANELBOARD ACCESSORIES: GB,CBB

CIRCUIT BREAKER ACCESSORIES:
AC - AUXILLIARY CONTACTS
EO - ELECTRICAL OPERATOR
GFCI - GROUND-FAULT INTERRUPTING
HACR - HACR RATING
HLF - HANDLE LOCK-OFF
HLN - HANDLE LOCK-ON
SR - SWITCH RATING
ST - SHUNT TRIP
ENCLOSURE ACCESSORIES:
CH - CONCEALED HINGE
CW - COLUMN WIDTH PANEL
DWD - HINDGED DOOR WITHIN HINGED DOOR
EGT - EXTENDED GUTTER TOP
EGB - EXTENDED GUTTER BOTTOM
EGSL - EXTENDED GUTTER LEFT HAND SIDE
EGSR - EXTENDED GUTTER RIGHT HAND SIDE
FL - FLUSH LOCK(S)
PANELBOARD ACCESSORIES
CL - COMPRESSION LUGS
FTL - FEED-THRU LUGS
GB - EQUIPMENT GROUND BAR KIT
GBI - GROUND BAR INSULATOR KIT
NBK - NEUTRAL BONDING KIT
PS - PREPARED CIRCUIT BREAKER SPACE
SB - SPLIT BUS
SER - SERVICE ENTRANCE RATING
SFB - SUB-FEED CIRCUIT BREAKER
SFL - SUB-FEED LUGS
CBB - TIN PLATED COPPER BUS BARS
ABB - TIN PLATED ALUMINUM BUS BARS
TRN - 200% RATED NEUTRAL BUS BAR
TVSS - TRANSIENT VOLTAGE SURGE SUPPRESSION

PANELBOARD SCHEDULE — P2

VOLTAGE: 120/208	POLES: 72	MOUNTING: SURFACE	ENCLOSURE: NEMA 1		
PHASE / WIRE: 3 / 4	KAIC AMPS (RMS): 42	LOCATION: MECH ROOM 161	MANUFACTURER: SQUARE D		
AMPS: 400	MAIN BREAKER / MLO: MLO	FED FROM: MDP2	MODEL: NQ		

CIRC. NO.	WIRE & CONDUIT	EQUIPMENT SERVED	C/B AMPS	C/B POLES	C/B ACC.	LOAD (VA)	PHASE LOADS (VA) A	B	C	LOAD (VA)	C/B ACC.	C/B POLES	C/B AMPS	EQUIPMENT SERVED	WIRE & CONDUIT	CIRC. NO.
1	(2)#12,#12G, 0.5"C	FITNESS/LOCKEROOM LIGHTING	20	1	-	1405	3180			1775	-	1	20	PATROL/HALLWAY LIGHTING	(2)#12,#12G, 0.5"C	2
3	(2)#12,#12G, 0.5"C	EVIDENCE/PROPERTY PROCESSING LIGHTING	20	1	-	1340		2290		950	-	1	20	SALLY PORT LIGHTING	(2)#12,#12G, 0.5"C	4
5	(2)#12,#12G, 0.5"C	OFFICE RECEPTACLES	20	1	-	1260			1800	540	-	1	20	OFFICE RECEPTACLES	(2)#12,#12G, 0.5"C	6
7	(2)#12,#12G, 0.5"C	ROLL CALL RECEPTACLES	20	1	-	1260	2520			1260	-	1	20	LOCKER ROOM RECEPTACLES	(2)#12,#12G, 0.5"C	8
9	(2)#12,#12G, 0.5"C	FITNESS/TRAINING RECEPTACLES	20	1	-	1440		2700		1260	-	1	20	BULK STORAGE RECEPTACLES	(2)#12,#12G, 0.5"C	10
11	(2)#12,#12G, 0.5"C	GENERAL RECEPTACLES	20	1	-	1620			2820	1200	-	1	20	DRYING CABINET	(2)#12,#12G, 0.5"C	12
13	(2)#12,#12G, 0.5"C	PROPERTY CLERK/PROCESSING RECEPTACLES	20	1	-	1080	1080				-	1	20	SPARE		14
15		ELECTRIC UNIT HEATER UH1	30	3	-	3335		4235		900	-	1	20	SALLY PORT RECEPTACLES	(2)#12,#12G, 0.5"C	16
17	(3)#12,#12G, 0.5"C	"				3335			3875	540	-	1	20	SALLY PORT RECEPTACLES	(2)#12,#12G, 0.5"C	18
19		"				3335	3695			360	-	1	20	EXTERIOR RECEPTACLES	(2)#12,#12G, 0.5"C	20
21		ELECTRIC UNIT HEATER UH2	30	3	-	3335		4055		720	-	1	20	PATROL 147 WORKDESKS	(2)#12,#12G, 0.5"C	22
23	(3)#12,#12G, 0.5"C	"				3335			4055	720	-	1	20	PATROL 147 WORKDESKS	(2)#12,#12G, 0.5"C	24
25		"				3335	3515			180	GFCI	1	20	DRINKING FOUNTAIN	(2)#12,#12G, 0.5"C	26
27	(2)#10,#10G, 0.75"C	SITE LIGHTING	20	2	-	735		1935		1200	-	1	20	FUME HOOD	(2)#12,#12G, 0.5"C	28
29		"				735			915	180	-	1	20	BULK TEMP STORAGE RECEPTACLE	(2)#12,#12G, 0.5"C	30
31	(2)#12,#12G, 0.5"C	LOCKER POWER	20	1	-	1260	2460			1200	-	1	20	TREADMILL	(2)#12,#12G, 0.5"C	32
33	(2)#12,#12G, 0.5"C	LOCKER POWER	20	1	-	1800		3000		1200	-	1	20	TREADMILL	(2)#12,#12G, 0.5"C	34
35	(2)#12,#12G, 0.5"C	LOCKER POWER	20	1	-	1440			2640	1200	-	1	20	WORKOUT EQUIPMENT	(2)#12,#12G, 0.5"C	36
37	(2)#12,#12G, 0.5"C	LOCKER POWER	20	1	-	1400	2600			1200	-	1	20	WORKOUT EQUIPMENT	(2)#12,#12G, 0.5"C	38
39	(2)#12,#12G, 0.5"C	LOCKER POWER	20	1	-	1080		1685		605	-	3	20	GATE MOTOR		40
41	(2)#12,#12G, 0.5"C	LOCKER POWER	20	1	-	1260			1865	605				"	(3)#10,#10G, 0.75"C	42
43	(2)#12,#12G, 0.5"C	LOCKER POWER	20	1	-	1260	1865			605				"		44
45	(2)#12,#12G, 0.5"C	LOCKER POWER	20	1	-	1800		2300		500	-	1	20	SIGNAGE LIGHTING	(2)#10,#10G, 0.75"C	46
47	(2)#12,#12G, 0.5"C	LOCKER POWER	20	1	-	900			1100	200	-	1	20	GENERATOR BATTERY CHARGER	(2)#12,#12G, 0.5"C	48
49	(2)#12,#12G, 0.5"C	EVIDENCE LOCKERS	20	1	-	1200	2700			1500	-	2	20	GENERATOR BLOCK HEATER	(2)#12,#12G, 0.5"C	50
51	(2)#12,#12G, 0.5"C	OVERHEAD DOOR MOTOR	20	1	-	800		2300		1500				"		52
53	(2)#12,#12G, 0.5"C	OVERHEAD DOOR MOTOR	20	1	-	800			1980	1180	-	1	20	EXHAUST FAN EF1	(2)#12,#12G, 0.5"C	54
55	(2)#12,#12G, 0.5"C	OVERHEAD DOOR MOTOR	20	1	-	800	1330			530	-	1	15	EXHAUST FAN EF2	(2)#12,#12G, 0.5"C	56
57	(2)#12,#12G, 0.5"C	OVERHEAD DOOR MOTOR	20	1	-	800		1500		700	-	1	15	EXHAUST FAN EF3	(2)#12,#12G, 0.5"C	58
59	(2)#12,#12G, 0.5"C	ROOF MAINTENANCE RECEPTACLES	20	1	-	720			1250	530	-	1	15	EXHAUST FAN EF4	(2)#12,#12G, 0.5"C	60
61		SPARE	20	1	-						-	1	20	SPARE		62
63		SPARE	20	1	-						-	1	20	SPARE		64
65		SPARE	20	1	-						-	1	20	SPARE		66
67		SPARE	20	1	-						-	1	20	SPARE		68
69		SPARE	20	1	-						-	1	20	SPARE		70
71		SPARE	20	1	-						-	1	20	SPARE		72

ENCLOSURE ACCESSORIES: CH,FL   PANELBOARD ACCESSORIES: GB,CBB

CIRCUIT BREAKER ACCESSORIES:
AC - AUXILLIARY CONTACTS
EO - ELECTRICAL OPERATOR
GFCI - GROUND-FAULT INTERRUPTING
HACR - HACR RATING
HLF - HANDLE LOCK-OFF
HLN - HANDLE LOCK-ON
SR - SWITCH RATING
ST - SHUNT TRIP
ENCLOSURE ACCESSORIES:
CH - CONCEALED HINGE
CW - COLUMN WIDTH PANEL
DWD - HINDGED DOOR WITHIN HINGED DOOR
EGT - EXTENDED GUTTER TOP
EGB - EXTENDED GUTTER BOTTOM
EGSL - EXTENDED GUTTER LEFT HAND SIDE
EGSR - EXTENDED GUTTER RIGHT HAND SIDE
FL - FLUSH LOCK(S)
PANELBOARD ACCESSORIES
CL - COMPRESSION LUGS
FTL - FEED-THRU LUGS
GB - EQUIPMENT GROUND BAR KIT
GBI - GROUND BAR INSULATOR KIT
NBK - NEUTRAL BONDING KIT
PS - PREPARED CIRCUIT BREAKER SPACE
SB - SPLIT BUS
SER - SERVICE ENTRANCE RATING
SFB - SUB-FEED CIRCUIT BREAKER
SFL - SUB-FEED LUGS
CBB - TIN PLATED COPPER BUS BARS
ABB - TIN PLATED ALUMINUM BUS BARS
TRN - 200% RATED NEUTRAL BUS BAR
TVSS - TRANSIENT VOLTAGE SURGE SUPPRESSION

PANELBOARD SCHEDULE — P1

VOLTAGE: 120/208	POLES: 72	MOUNTING: SURFACE	ENCLOSURE: NEMA 1		
PHASE / WIRE: 3 / 4	KAIC AMPS (RMS): 42	LOCATION: MECH ROOM 161	MANUFACTURER: SQUARE D		
AMPS: 400	MAIN BREAKER / MLO: MLO	FED FROM: MDP1	MODEL: NQ		

CIRC. NO.	WIRE	EQUIPMENT SERVED	C/B AMPS	C/B POLES	C/B ACC.	LOAD (VA)	PHASE LOADS (VA) A	B	C	LOAD (VA)	C/B ACC.	C/B POLES	C/B AMPS	EQUIPMENT SERVED	WIRE	CIRC. NO.
1		FAN POWERED VAV FVAV6A	25	3	-	2415	2415				-	1	20	SPARE		2
3	(3)#10,#10G, 0.75"C	"				2415		2415			-	1	20	SPARE		4
5		"				2415			2415		-	1	20	SPARE		6
7		FAN POWERED VAV FVAV6B	25	3	-	2415	2415				-	1	20	SPARE		8
9	(3)#10,#10G, 0.75"C	"				2415		2415			-	1	20	SPARE		10
11		"				2415			2415		-	1	20	SPARE		12
13		FAN POWERED VAV FVAV7	20	3	-	2210	2210				-	1	20	SPARE		14
15	(3)#12,#12G, 0.5"C	"				2210		2210			-	1	20	SPARE		16
17		"				2210			2210		-	1	20	SPARE		18
19		FAN POWERED VAV FVAV8	15	3	-	1790	1790				-	1	20	SPARE		20
21	(3)#12,#12G, 0.5"C	"				1790		1790			-	1	20	SPARE		22
23		"				1790			1790		-	1	20	SPARE		24
25		FAN POWERED VAV FVAV9	20	3	-	2210	2210				-	1	20	SPARE		26
27	(3)#12,#12G, 0.5"C	"				2210		2210			-	1	20	SPARE		28
29		"				2210			2210		-	1	20	SPARE		30
31		FAN POWERED VAV FVAV10	15	3	-	1790	1790				-	1	20	SPARE		32
33	(3)#12,#12G, 0.5"C	"				1790		1790			-	1	20	SPARE		34
35		"				1790			1790		-	1	20	SPARE		36
37		FAN POWERED VAV FVAV11	25	3	-	2630	2630				-	1	20	SPARE		38
39	(3)#10,#10G, 0.75"C	"				2630		2630			-	1	20	SPARE		40
41		"				2630			2630		-	1	20	SPARE		42
43		FAN POWERED VAV FVAV12A	15	3	-	1790	1790				-	1	20	SPARE		44
45	(3)#12,#12G, 0.5"C	"				1790		1790			-	1	20	SPARE		46
47		"				1790			1790		-	1	20	SPARE		48
49		FAN POWERED VAV FVAV12B	25	3	-	2415	2415				-	1	20	SPARE		50
51	(3)#10,#10G, 0.75"C	"				2415		2415			-	1	20	SPARE		52
53		"				2415			2415		-	1	20	SPARE		54
55		FAN POWERED VAV FVAV18	20	3	-	2210	2210				-	1	20	SPARE		56
57	(3)#12,#12G, 0.5"C	"				2210		2210			-	1	20	SPARE		58
59		"				2210			2210		-	1	20	SPARE		60
61		FAN POWERED VAV FVAV5	15	3	-	1790	1790				-	1	20	SPARE		62
63	(3)#12,#12G, 0.5"C	"				1790		1790			-	1	20	SPARE		64
65		"				1790			1790		-	1	20	SPARE		66
67		SPARE	20	1	-						-	1	20	SPARE		68
69		SPARE	20	1	-						-	1	20	SPARE		70
71		SPARE	20	1	-						-	1	20	SPARE		72

ENCLOSURE ACCESSORIES: CH,FL   PANELBOARD ACCESSORIES: GB,CBB

CIRCUIT BREAKER ACCESSORIES:
AC - AUXILLIARY CONTACTS
EO - ELECTRICAL OPERATOR
GFCI - GROUND-FAULT INTERRUPTING
HACR - HACR RATING
HLF - HANDLE LOCK-OFF
HLN - HANDLE LOCK-ON
SR - SWITCH RATING
ST - SHUNT TRIP
ENCLOSURE ACCESSORIES:
CH - CONCEALED HINGE
CW - COLUMN WIDTH PANEL
DWD - HINDGED DOOR WITHIN HINGED DOOR
EGT - EXTENDED GUTTER TOP
EGB - EXTENDED GUTTER BOTTOM
EGSL - EXTENDED GUTTER LEFT HAND SIDE
EGSR - EXTENDED GUTTER RIGHT HAND SIDE
FL - FLUSH LOCK(S)
PANELBOARD ACCESSORIES
CL - COMPRESSION LUGS
FTL - FEED-THRU LUGS
GB - EQUIPMENT GROUND BAR KIT
GBI - GROUND BAR INSULATOR KIT
NBK - NEUTRAL BONDING KIT
PS - PREPARED CIRCUIT BREAKER SPACE
SB - SPLIT BUS
SER - SERVICE ENTRANCE RATING
SFB - SUB-FEED CIRCUIT BREAKER
SFL - SUB-FEED LUGS
CBB - TIN PLATED COPPER BUS BARS
ABB - TIN PLATED ALUMINUM BUS BARS
TRN - 200% RATED NEUTRAL BUS BAR
TVSS - TRANSIENT VOLTAGE SURGE SUPPRESSION

LIGHTING FIXTURE SCHEDULE

MARK	MANUFACTURER	MODEL #	DRIVER	FINISH	MOUNTING	LAMPS TYPE	LAMPS CODE	LAMPS QTY.	FIXTURE WATTS	LUMEN OUTPUT	VOLTAGE	APPROVED MANUFACTURERS	NOTES
B1	ENERGY LIGHT	GL14INC	STANDARD	WHITE	BOLLARD	INC	WITH FIXTURE	-	50 MAX	-	120	-	2,4
C1	COOPER LIGHTING	HC420D010-HM40525835-41MDCWF	DIMMABLE	WHITE	RECESSED	LED	WITH FIXTURE	-	21	2000	120	SUBMIT FOR APPROVAL	3
C1E	COOPER LIGHTING	HC420D010REM7-HM40525835-41MDCWF	EMER/DIM	WHITE	RECESSED	LED	WITH FIXTURE	-	21	2000	120	SUBMIT FOR APPROVAL	3,5
C2	WAC LIGHTING	HR-LED10-30-BK	STANDARD	BLACK	SURFACE	LED	WITH FIXTURE	-	2	100	120	SUBMIT FOR APPROVAL	3
CF1	MINKAAIRE	F789-CL	STANDARD	COAL	CEILING	-	WITH FIXTURE	-	40	-	120	SUBMIT FOR APPROVAL	2,3,4
CV1	BASICS	BA42-SO-35K-X(SEE PLAN FOR LENGTH)-B45RC-XX	STANDARD	WHITE	REC/COVE	LED	WITH FIXTURE	-	2/FT	196/FT	120	SUBMIT FOR APPROVAL	4,9,13
EM1	LITHONIA LIGHTING	ELM2L-M12	EMERGENCY	WHITE	SURFACE	LED	WITH FIXTURE	-	2	220	120	SUBMIT FOR APPROVAL	4
S1	LUMINII	BAR-72-72VHO-35K-FROSTED, PDCU-D-3X96-24 DRIVER	STANDARD	WHITE	CEILING GRID	LED	WITH FIXTURE	-	36	344LM/FT	120	SUBMIT FOR APPROVAL	4,10
S2	LUMINII	BAR-96-72VHO-35K-FROSTED, PDCU-D-3X96-24 DRIVER	STANDARD	WHITE	CEILING GRID	LED	WITH FIXTURE	-	48	344LM/FT	120	SUBMIT FOR APPROVAL	4,10
S3	LUMINII	BAR-48-72VHO-35K-FROSTED, PS10V-3X96-24-LIN DRIVER	DIMMABLE	WHITE	CEILING GRID	LED	WITH FIXTURE	-	24	344LM/FT	120	SUBMIT FOR APPROVAL	4,11
S4	LUMINII	BAR-48-72VHO-35K-FROSTED, PS10V-3X96-24 DRIVER	STANDARD	WHITE	CEILING GRID	LED	WITH FIXTURE	-	24	344LM/FT	120	SUBMIT FOR APPROVAL	4,10
S5	LUMENWERX	CUBS-HLO-LED-80-700-35-63"-UNV-MIKDR-1-DRM	DIMMABLE	WHITE	SURFACE	LED	WITH FIXTURE	-	5.5W/FT	700LM/FT	120	SUBMIT FOR APPROVAL	4,8
S6	LUMENWERX	CUBS-HLO-LED-80-700-35-65"-UNV-MIKDR-1-DRM	DIMMABLE	WHITE	SURFACE	LED	WITH FIXTURE	-	5.5W/FT	700LM/FT	120	SUBMIT FOR APPROVAL	4,8
S7	LUMENWERX	CUBS-HLO-LED-80-700-35-94"-UNV-MIKDR-1-DRM	DIMMABLE	WHITE	SURFACE	LED	WITH FIXTURE	-	5.5W/FT	700LM/FT	120	SUBMIT FOR APPROVAL	4,8
S8	LUMENWERX	CUBS-HLO-LED-80-700-35-100"-UNV-MIKDR-1-DRM	DIMMABLE	WHITE	SURFACE	LED	WITH FIXTURE	-	5.5W/FT	700LM/FT	120	SUBMIT FOR APPROVAL	4,8
S5	LUMENWERX	CUBS-HLO-LED-80-700-35-156"-UNV-MIKDR-1-DRM	DIMMABLE	WHITE	SURFACE	LED	WITH FIXTURE	-	5.5W/FT	700LM/FT	120	SUBMIT FOR APPROVAL	4,8
S10	WILLIAMS	75S-4-L30/835	STANDARD	WHITE	SUSPENDED	LED	WITH FIXTURE	-	20	2916	120	SUBMIT FOR APPROVAL	4
S10E	WILLIAMS	75S-4-L30/835-EM/10WLP	EMER/STANDARD	WHITE	SUSPENDED	LED	WITH FIXTURE	-	20	2916	120	SUBMIT FOR APPROVAL	4,5
S11	KENALL	CC-4-0/0-45L50K-DCC-DV-SYM-1	STANDARD	WHITE	SURFACE	LED	WITH FIXTURE	-	47	4625	120	SUBMIT FOR APPROVAL	4
S11E	KENALL	CC-4-0/0-45L50K-DCC-DV-SYM-1-LEL	EMER/STANDARD	WHITE	SURFACE	LED	WITH FIXTURE	-	47	4625	120	SUBMIT FOR APPROVAL	4,5
S12	WILLIAMS	96-2-L21/835-HAIFR-WET/1-DRV-UNV	STANDARD	BLACK	SURFACE	LED	WITH FIXTURE	-	18	2201	120	SUBMIT FOR APPROVAL	4
S13	METALUX	2BCLED-LD4-8S1-F-UNV-L835-CD1	STANDARD	WHITE	SURFACE	LED	WITH FIXTURE	-	8	920	120	SUBMIT FOR APPROVAL	4
S14	FINELITE	HP-4-P-ID-12-B-S-835-WSO-F-96LG-120-DC-FC-10%-XXXX-FE-XXX	STANDARD	WHITE	SURFACE	LED	WITH FIXTURE	-	18.5W/FT	538LM/FT(UL)/379LM/FT(DL)	120	SUBMIT FOR APPROVAL	4
S14E	FINELITE	HP-4-P-ID-12-B-S-835-WSO-F-96LG-120-DC-FC-10%-XXXX-FE-XXX-LGD10W	STANDARD	WHITE	SURFACE	LED	WITH FIXTURE	-	18.5W/FT	538LM/FT(UL)/379LM/FT(DL)	120	SUBMIT FOR APPROVAL	4,5
S15	FINELITE	MKW-24"-72H0-35K-F-CB-BK-LWE-REW, PS-UNI-W-96-24 DRIVER	STANDARD	BLACK	SURFACE	LED	WITH FIXTURE	-	10	500	120	SUBMIT FOR APPROVAL	4
T1	COOPER LIGHTING	22C72-44-UNV-L835-CD1	DIMMABLE	WHITE	RECESSED	LED	WITH FIXTURE	-	33	4400	120	SUBMIT FOR APPROVAL	4
T1E	COOPER LIGHTING	22C72-44-UNV-EL10W-L835-CD1	DIMMABLE	WHITE	RECESSED	LED	WITH FIXTURE	-	33	4400	120	SUBMIT FOR APPROVAL	4,5
T2	COOPER LIGHTING	SMD6R12935WH	STANDARD	MATTE WHITE	SURFACE	LED	WITH FIXTURE	-	16	1250	120	SUBMIT FOR APPROVAL	4
A1	FOCAL POINT	ASM1TP-6-RL-8-4500L-835K-1C-UNV	STANDARD	WALNUT	SUSPENDED	LED	WITH FIXTURE	-	40	4500	120	SUBMIT FOR APPROVAL	4
A2	FOCAL POINT	ASM1TP-6-RL-12-1800L-835K-1C-UNV	STANDARD	CHARCOAL GRAY	SUSPENDED	LED	WITH FIXTURE	-	16	1800	120	SUBMIT FOR APPROVAL	4
IG1	LUMINERE	3002A-RD-25LED3500-SP-CLR-UNV-BZ	STANDARD	BRONZE	IN-GRADE	LED	WITH FIXTURE	-	25	1385	208	SUBMIT FOR APPROVAL	2,4
P1	OCL	TB3-XXXX-48-MW-WTP-LED2-35K-ND-UNV-DM1	DIMMABLE	MATTE WHITE	PENDANT	LED	WITH FIXTURE	-	30	4400	120	SUBMIT FOR APPROVAL	4,6
P2	LUMENWERX	RIMREP-24INX96IN-ULO-SW-90CRI-6500LM-35K-D1-1C	DIMMABLE	WHITE	PENDANT	LED	WITH FIXTURE	-	73	6500	120	SUBMIT FOR APPROVAL	4,6
P3	BROWNLEE	7200-BL-L16-35K	STANDARD	BLACK	SURFACE	LED	WITH FIXTURE	-	16	1500	120	SUBMIT FOR APPROVAL	2,4
PL1	MCGRAW-EDISON	GLEON-SA3A-740-U-T4FT-HSS	STANDARD	BLACK	POLE	LED	WITH FIXTURE	-	96	14315	208	SUBMIT FOR APPROVAL	1,2,4
PL2	MCGRAW-EDISON	(2) GLEON-SA3A-740-U-T4FT-HSS	STANDARD	BLACK	POLE	LED	WITH FIXTURE	-	192	28630	208	SUBMIT FOR APPROVAL	1,2,4
PL3	MCGRAW-EDISON	GLFD-SA1B-740-U-MWR-P-BK	STANDARD	BLACK	POLE	LED	WITH FIXTURE	-	34	4870	208	SUBMIT FOR APPROVAL	2,4,15
UC1	AFX	ELNU22BK	STANDARD	BLACK	SURFACE	LED	WITH FIXTURE	-	12	805	120	SUBMIT FOR APPROVAL	4
UC2	AFX	ELNU32BK	STANDARD	BLACK	SURFACE	LED	WITH FIXTURE	-	16	1094	120	SUBMIT FOR APPROVAL	4
UC3	AFX	ELNU40BK	STANDARD	BLACK	SURFACE	LED	WITH FIXTURE	-	20	1341	120	SUBMIT FOR APPROVAL	4
W1	VISUAL COMFORT & CO.	700WSQDR-Z-LEDWD	STANDARD	BRONZE	WALL	LED	WITH FIXTURE	-	27	1000	120	SUBMIT FOR APPROVAL	2,4
W1E	VISUAL COMFORT & CO.	700WSQDR-Z-LEDWD	EMER/STANDARD	BRONZE	WALL	LED	WITH FIXTURE	-	27	1000	120	SUBMIT FOR APPROVAL	2,4,5
X1	WILLIAMS	EXIT/EM/LP-R-WHT-SDT-D	EMERGENCY	RED/WHITE	SURACE/WALL	LED	WITH FIXTURE	-	5	-	120	SUBMIT FOR APPROVAL	5,14

NOTES:
1. PROVIDE FIXTURE WITH 25' SQUARE STEEL POLE AND POLE BASE COVER IN FINISH TO MATCH FIXTURE.
2. FIXTURE SHALL BE LISTED FOR OUTDOOR USE AND SHALL BE UL LISTED FOR DAMP OR WET LOCATION AS REQUIRED.
3. PROVIDE CLIPS OR MEAN OF SUPPORT AS REQUIRED TO COMPLY WITH N.E.C. ARTICLE 410-16
4. VERIFY EXACT MOUNTING HEIGHT, LOCATION, AND FINISH WITH ARCHITECT PRIOR TO ROUGH-IN.
5. PROVIDE FIXTURE WITH EMERGENCY BATTERY BACK-UP FOR MINIMUM 90-MINUTES OPERATION.
6. VERIFY PENDANT LENGTH WITH ARCHITECT.
7. PROVIDE CONTINUOUS RIGID OR FLEXIBLE MOUNTING CHANNEL AS REQUIRED.
8. EXACT FIXTURE LENGTH DETERMINED BY FIELD MEASURED DIMENSIONS.
9. PROVIDE WITH 0-10V DIMMABLE DRIVER AND ALL ACCESSORIES REQUIRED FOR COMPLETE INSTALLATION.
10. PROVIDE WITH DRIVER (FOR SERVICE TO MULTIPLE FIXTURES PER PLAN) AND ALL CONTROL WIRING AND ACCESSORIES AS REQUIRED FOR COMPLETE INSTALLATION.
11. PROVIDE WITH 0-10V DRIVER (FOR SERVICE TO MULTIPLE FIXTURES PER PLAN) AND ALL ACCESSORIES AS REQUIRED FOR COMPLETE INSTALLATION.
12. PROVIDE WITH DRIVER (FOR SERVICE TO MULTIPLE FIXTURES PER PLAN) AND ALL ACCESSORIES AS REQUIRED FOR COMPLETE INSTALLATION.
13. SEE PLAN FOR TUBE LENGTH
14. REFER TO PLANS FOR MOUNTING TYPE, FACE ORIENTATION AND CHEVRON DIRECTION.
15. PROVIDE MOUNTING BRACKETS AND ARMS FOR FLOOD LIGHTING FIXTURES WITH INSTALLATION AT 15' ABOVE POLE BASE.

CJD
Engineering | Energy | Innovation
2225 West Chesterfield Boulevard, Suite 200, Springfield, MO 65807
P: 417.877.1700 F: 417.324.7735 www.cjd-eng.com
Missouri State Certificate of Authority #200502690366

Special Notice: Drawings prepared by CJD Engineering LLC are instruments of service for use solely with respect to this project. CJD Engineering LLC retains ownership and all common law, statutory law and other reserved rights including copyrights. This drawing shall not be reused in part or in full for any other work without prior written consent by and appropriate compensation to CJD Engineering LLC. Whosoever changes the design without prior written approval from CJD Engineering LLC, does so at their own risk and assumes full responsibility for any damages, liabilities or costs resulting directly or indirectly from such changes to the fullest extent of the law.

NIXA POLICE DEPARTMENT

NORTH LEEANN DRIVE
NIXA, MO 65714

INSIGHT DESIGN iDeA ARCHITECTS
112 S. Main St., Nixa, MO 65714 Ph: 417-724-8553

CJD Engineering | Energy | Innovation

olsson

METTEMEYER ENGINEERING LLC

Chiodini ARCHITECTS
Architecture / Interior Design / Graphics
1401 S. Brentwood Blvd. / Suite 575 / St. Louis, Missouri 63144
314-725-5588 / arch@chiodini.com

Reissue Date

Professional of Record

STATE OF MISSOURI
ALLEN DAVIS
NUMBER PE-2004017155
PROFESSIONAL ENGINEER

DATE 06.10.2025

Copyright 2025 ©
These prints are the property of the architect and shall be used only for the project referenced above

Drawn: JAR

Project #: 24-003

Date: 2025.06.10

Drawing Title: ELECTRICAL SCHEDULES

Sheet: E300

PRINTED: 6/10/2025 5:04:34 PM

DISCONNECT SWITCH SCHEDULE

MARK	LOAD		SWITCH			OVERCURRENT PROTECTION					NEMA ENCLOSURE	NOTES & ACCESS.
	EQUIPMENT SERVED	VOLTAGE	DUTY	AMP	POLE	TYPE	MFR	MODEL	AMP	KAIC		
DS1	MSCU1	208	GD	30	2	NF	-	-	-	-	3R	1,2
DS2	MSHP1	208	GD	30	2	NF	-	-	-	-	3R	1,2

ACCESSORIES:
1. GROUND LUG KIT
2. DISCONNECT SHALL BE LOCKABLE IN THE OPEN POSITION
3. SERVICE ENTRANCE RATING

ABBREVIATIONS:
CB - ENCLOSED CIRCUIT BREAKER
GD - GENERAL DUTY
HD - HEAVY DUTY

LIGTHING CONTACTOR SCHEDULE

MARK	LOAD			CONTACTOR					INTERLOCK	
	EQUIPMENT SERVED	WATTS	VOLTAGE	TYPE	AMP	POLE	ENCLOSURE	ACCESSORIES	CONTROLLED BY	CONTROLS
LC1	SITE LIGHTING	-	208	NOEH	30	4	NEMA 1	1,2	TS1	-

ACCESSORIES:
1. COORDINATE COIL VOLTAGE
2. GREEN PILOT LIGHT WHEN LOAD IS ON, RED PILOT LIGHT WHEN LOADS ARE CONTROLLED OFF

ABBREVIATIONS
NCEH - NORMALLYCLOSED, ELECTRICALLY HELD
NOEH - NORMALLY OPEN, ELECTRICALLY HELD
NCMH - NORMALLY CLOSED, MECHANICALLY HELD

NOTES:
1. MULTIPLE CONTACTORS MAY BE USED TO MEET NUMBER OF POLES REQUIRED, WHEN MULTIPLE 120V CIRCUITS ARE CONTROLLED TOGETHER
2. CONFIRM CONTACTOR TYPE, FOR CONTROLS PROVIDED WITH KITCHEN HOOD CONTROL PANEL. CONTACTOR SHALL BE CONTROLLED SUCH THAT ALL CIRCUITS THROUGH CONTACTOR SHALL BE DE-ENERGIZED PRIOR TO ACTIVATION OF HOOD FIRE SUPPRESSION SYSTEM

OCCUPANCY SENSOR SCHEDULE

MARK	LOAD		SENSOR							
	EQUIPMENT SERVED	VOLTAGE	MANUF	MODEL #	VOLTAGE	TYPE	TIME DELAY	MOUNTING	INTERLOCK	NOTES
OS1	OFFICE LIGHTING	120	HUBBELL	AD2000	120	US/IR	30 MIN.	WALL BOX	-	3
OS2	OPEN AREA LIGHTING	120	HUBBELL	ATD2000CL	120	US/IR	30 MIN.	CEILING	-	1,2

NOTES/ACCESSORIES:
1. PROVIDE HUBBEL ADD-A-RELAY, SUCH THAT PARALLEL SENSORS SHALL BE CAPABLE OF CONTROLLING (2) ROOM LIGHTING CIRCUITS
2. WIRE IN PARALLEL WITH MULTIPLE SENSORS WHERE APPLICABLE.
3. WALL SWITCH SHALL BE CAPABLE OF MANUAL ON-OFF CONTROL

GENERAL NOTES (APPLIES TO ALL SENSORS):
1. EACH SENSOR TYPE MAY BE SHOWN IN MULTIPLE LOCATIONS ON ELECTRICAL PLANS
2. EQUIPMENT SUBMITTAL: PRIOR TO APPROVAL, WITH OCCUPANCY SENSOR SPECIFICATION INFORMATION, CONTRACTOR SHALL SUBMIT PLAN (PROVIDED BY MANUFACTURER'S REPRESENTATIVE) WITH OCCUPANCY SENSOR LOCATIONS, OCCUPANCY SENSOR TYPE, MOUNTING HEIGHT, AND SENSOR COVERAGE FOR EACH SPACE.
3. WHERE SWITCHING IS SHOWN, WIRE OCCUPANCY SENSOR CONTROL IN SERIES WITH LOCAL LIGHT SWITCHING.
4. PROVIDE CONTROL UNIT(S)/POWER PACK(S) AS REQUIRED.
5. FINISH/COLOR SHALL MATCH ALL OTHER DEVICES.

ABBREVIATIONS:
PIR - PASSIVE INFRARED
US - ULTRASONIC
IR/US -DUAL TECHNOLOGY

APPROVED MANUFACTURERS:
GREENGATE/NOVITAS
WATTSTOPPER
HUBBELL

GENERATOR SCHEDULE

MARK	MANUFACTURER	STANDBY POWER RATING (@ 0.8pf)	FUEL TYPE	OUTPUT VOLTAGE (60Hz)	OUTPUT CIRCUIT BREAKER(S)	ALTERNATOR		NFPA 110	NOTES AND ACCESSORIES
						TYPE	*MIN. sKVA	TYPE-LEVEL	
GEN1	CUMMINS	750kW/938kVA	DIESEL	120/208V, 3PH, 4W	(2)1200 AMP	PMG	3657	10 - LEVEL 2	1,2,3,6

NOTES/ACCESSORIES:
1. REMOTE ANNUNCIATOR. INSTALL AT LOCATION THAT IS READILY OBSERVABLE TO PERSONNEL.
2. COOLANT HEATER/ENGINE BLOCK HEATER
3. UL 142 SUB-BASE FUEL TANK - MIN. 36 HOUR FULL LOAD RUN TIME
4. STANDARD OUTDOOR WEATHER ENCLOSURE
5. SOUND-ATTENUATED (LEVEL I) OUTDOOR WEATHER ENCLOSURE
6. SOUND-ATTENUATED (LEVEL II) OUTDOOR WEATHER ENCLOSURE
7. DAY TANK AND REMOTE FUEL TANK

GENERAL NOTES (APPLIES TO ALL GENERATORS):
1. REFER TO GENERATOR SPECIFICATIONS FOR APPROVED MANUFACTURERS AND ADDITIONAL REQUIREMENTS.
2. sKVA (IF LISTED) IS WITH 30% VOLTAGE DIP.
3. PROVIDE UPSIZED ALTERNATOR IF NECESSARY TO PROVIDE MINIMUM INDICATED sKVA.
4. REMOTE ANNUNCIATOR LOCATION SHALL BE FIELD COORDINATED OR VERIFIED WITH OWNER'S AUTHORIZED REPRESENTATIVE, PRIOR TO INSTALLATION.

PANELBOARD SCHEDULE — MDP2

VOLTAGE: 120/208	MOUNTING SPACE: 72"	MOUNTING: SURFACE	ENCLOSURE: NEMA 1		
PHASE / WIRE: 3 / 4	KAIC AMPS (RMS): 42	LOCATION: MECH ROOM 161	MANUFACTURER: SQUARE D		
AMPS: 1200	MAIN BREAKER / MLO: 1200A MCB	FED FROM: TRASF SWITCH ATS2	MODEL: I-LINE		

CIRC. NO.	LOAD	C/B TYPE	C/B AMPS	C/B POLES	C/B ACC.	LOAD (VA)	A	B	C	LOAD (VA)	C/B ACC.	C/B POLES	C/B AMPS	C/B TYPE	LOAD	CIRC. NO.
						24945	51765			26820						
1	PANELBOARD P2	-	400	3	-	26000		52820		26820	ST	3	400	-	PANELBOARD P3	2
						22300			49120	26820						
						31360	39560			8200						
3	PANELBOARD P4	-	400	3	-	25015		30515		5500	-	3	100	-	PANELBAORD UP1	4
						21960			27160	5200						
							36000			36000						
5	SPACE ONLY	-	-	3	-			36000		36000	-	3	400	-	FUTURE ADDITION	6
									36000	36000						
							0									
7	SPACE ONLY	-	-	3	-			0			-	3	-	-	SPACE ONLY	8
									0							
							0									
9	SPACE ONLY	-	-	3	-			0			-	3	-	-	SPACE ONLY	10
									0							

ENCLOSURE ACCESSORIES: CH,FL — PANELBOARD ACCESSORIES: CBB, GB

CIRCUIT BREAKER ACCESSORIES:
100% - 100% RATED C/B
AC - AUXILLIARY CONTACTS
EO - ELECTRICAL OPERATOR
GFCI - GROUND-FAULT INTERRUPTING
GFP - MAIN BKR GROUND FAULT PROT
HACR - HACR RATING
HLF - HANDLE LOCK-OFF
HLN - HANDLE LOCK-ON
PFR - PHASE FAILURE RELAY
ST - SHUNT TRIP

ENCLOSURE ACCESSORIES:
CH - CONCEALED HINGE
CW - COLUMN WIDTH PANEL
DWD - HINDGED DOOR WITHIN HINGED DOOR
EGT - EXTENDED GUTTER TOP
EGB - EXTENDED GUTTER BOTTOM
EGSL - EXTENDED GUTTER LEFT HAND SIDE
EGSR - EXTENDED GUTTER RIGHT HAND SIDE
FL - FLUSH LOCK(S)

PANELBOARD ACCESSORIES
CL - COMPRESSION LUGS
FTL - FEED-THRU LUGS
GB - EQUIPMENT GROUND BAR KIT
GBI - GROUND BAR INSULATOR KIT
NBK - NEUTRAL BONDING KIT
PS - PREPARED CIRCUIT BREAKER SPACE
SB - SPLIT BUS
SER - SERVICE ENTRANCE RATING
SFB - SUB-FEED CIRCUIT BREAKER
SFL - SUB-FEED LUGS
CBB - SILVER PLATED COPPER BUS BARS
ABB - TIN PLATED ALUMINUM BUS BARS
TRN - 200% RATED NEUTRAL BUS BAR
SPD - SURGE PROTECTION DEVICE

PANELBOARD SCHEDULE — MDP1

VOLTAGE: 120/208	MOUNTING SPACE: 72"	MOUNTING: SURFACE	ENCLOSURE: NEMA 1		
PHASE / WIRE: 3 / 4	KAIC AMPS (RMS): 42	LOCATION: MECH ROOM 161	MANUFACTURER: SQUARE D		
AMPS: 1200	MAIN BREAKER / MLO: 1200A MCB	FED FROM: TRASF SWITCH ATS1	MODEL: I-LINE		

CIRC. NO.	LOAD	C/B TYPE	C/B AMPS	C/B POLES	C/B ACC.	LOAD (VA)	A	B	C	LOAD (VA)	C/B ACC.	C/B POLES	C/B AMPS	C/B TYPE	LOAD	CIRC. NO.
						25375	25375									
1	PANELBOARD P1	-	400	3	ST	24195		24195			-	3	-	-	SPACE ONLY	2
						24365			24365							
						44555	54550			9995						
3	ROOFTOP UNIT RTU1 C1	-	400	3	-	44555		54550		9995	-	3	110	-	ROOFTOP UNIT RTU1 C2	4
						44555			54550	9995						
						36000	36000									
5	FUTURE BUILDING ADDITION	-	400	3	-	36000		36000			-	3	-	-	1	6
						36000			36000							
							0									
7	SPACE ONLY	-	-	3	-			0			-	3	-	-	SPACE ONLY	8
									0							
							0									
9	SPACE ONLY	-	-	3	-			0			-	3	-	-	SPACE ONLY	10
									0							

ENCLOSURE ACCESSORIES: CH,FL — PANELBOARD ACCESSORIES: CBB, GB

CIRCUIT BREAKER ACCESSORIES:
100% - 100% RATED C/B
AC - AUXILLIARY CONTACTS
EO - ELECTRICAL OPERATOR
GFCI - GROUND-FAULT INTERRUPTING
GFP - MAIN BKR GROUND FAULT PROT
HACR - HACR RATING
HLF - HANDLE LOCK-OFF
HLN - HANDLE LOCK-ON
PFR - PHASE FAILURE RELAY
ST - SHUNT TRIP

ENCLOSURE ACCESSORIES:
CH - CONCEALED HINGE
CW - COLUMN WIDTH PANEL
DWD - HINDGED DOOR WITHIN HINGED DOOR
EGT - EXTENDED GUTTER TOP
EGB - EXTENDED GUTTER BOTTOM
EGSL - EXTENDED GUTTER LEFT HAND SIDE
EGSR - EXTENDED GUTTER RIGHT HAND SIDE
FL - FLUSH LOCK(S)

PANELBOARD ACCESSORIES
CL - COMPRESSION LUGS
FTL - FEED-THRU LUGS
GB - EQUIPMENT GROUND BAR KIT
GBI - GROUND BAR INSULATOR KIT
NBK - NEUTRAL BONDING KIT
PS - PREPARED CIRCUIT BREAKER SPACE
SB - SPLIT BUS
SER - SERVICE ENTRANCE RATING
SFB - SUB-FEED CIRCUIT BREAKER
SFL - SUB-FEED LUGS
CBB - SILVER PLATED COPPER BUS BARS
ABB - TIN PLATED ALUMINUM BUS BARS
TRN - 200% RATED NEUTRAL BUS BAR
SPD - SURGE PROTECTION DEVICE

PANELBOARD SCHEDULE — UP1

VOLTAGE: 120/208	POLES: 42	MOUNTING: SURFACE	ENCLOSURE: NEMA 1		
PHASE / WIRE: 3 / 4	KAIC AMPS (RMS): 22	LOCATION: MECH ROOM 161	MANUFACTURER: SQUARE D		
AMPS: 100	MAIN BREAKER / MLO: MLO	FED FROM: UPS	MODEL: NQ		

CIRC. NO.	WIRE	EQUIPMENT SERVED	C/B AMPS	C/B POLES	C/B ACC.	LOAD (VA)	A	B	C	LOAD (VA)	C/B ACC.	C/B POLES	C/B AMPS	EQUIPMENT SERVED	WIRE	CIRC. NO.
1	(2)#12,#12G, 0.5"C	CONTROL COMPUTER SERVER	20	1	-	1500	3000			1500	-	1	20	CONTROL COMPUTER SERVER	(2)#12,#12G, 0.5"C	2
3	(2)#12,#12G, 0.5"C	CLERKS 110 COMPUTERS	20	1	-	1000		2000		1000	-	1	20	CLERKS 110 COMPUTERS	(2)#12,#12G, 0.5"C	4
5	(2)#12,#12G, 0.5"C	PROPERTY PROCESSING 162 COMPUTER	20	1	-	500			1700	1200	-	1	20	EVIDENCE REFRIGERATOR	(2)#12,#12G, 0.5"C	6
7	(2)#12,#12G, 0.5"C	EVIDENCE REFRIGERATOR	20	1	-	1200	1700			500	HLN	1	20	FIRE ALARM CONTROL PANEL	(2)#12,#12G, 0.5"C	8
9	(2)#12,#12G, 0.5"C	ACCESS CONTROL	20	1	-	1500		3000		1500	-	1	20	VIDEO SURVEILLANCE SYSTEM	(2)#12,#12G, 0.5"C	10
11	(2)#12,#12G, 0.5"C	ACCESS CONTROL	20	1	-	1500			3000	1500	-	1	20	VIDEO SURVEILLANCE SYSTEM	(2)#12,#12G, 0.5"C	12
13	(2)#12,#12G, 0.5"C	ACCESS CONTROL	20	1	-	1500	3000			1500	-	1	20	VIDEO SURVEILLANCE SYSTEM	(2)#12,#12G, 0.5"C	14
15	(2)#12,#12G, 0.5"C	EVIDENCE LOCKER	15	1	-	500		500			-	1	20	SPARE		16
17	(2)#12,#12G, 0.5"C	EVIDENCE LOCKER	15	1	-	500			500		-	1	20	SPARE		18
19	(2)#12,#12G, 0.5"C	EVIDENCE LOCKER	15	1	-	500	500				-	1	20	SPARE		20
21		SPARE	20	1	-						-	1	20	SPARE		22
23		SPARE	20	1	-						-	1	20	SPARE		24
25		SPARE	20	1	-						-	1	20	SPARE		26
27		SPARE	20	1	-						-	1	20	SPARE		28
29		SPARE	20	1	-						-	1	20	SPARE		30
31		SPARE	20	1	-						-	1	20	SPARE		32
33		SPARE	20	1	-						-	1	20	SPARE		34
35		SPARE	20	1	-						-	1	20	SPARE		36
37		SPARE	20	1	-						-	1	20	SPARE		38
39		SPARE	20	1	-						-	1	20	SPARE		40
41		SPARE	20	1	-						-	1	20	SPARE		42

ENCLOSURE ACCESSORIES: CH,FL — PANELBOARD ACCESSORIES: GB,CBB

CIRCUIT BREAKER ACCESSORIES:
AC - AUXILLIARY CONTACTS
EO - ELECTRICAL OPERATOR
GFCI - GROUND-FAULT INTERRUPTING
HACR - HACR RATING
HLF - HANDLE LOCK-OFF
HLN - HANDLE LOCK-ON
SR - SWITCH RATING
ST - SHUNT TRIP

ENCLOSURE ACCESSORIES:
CH - CONCEALED HINGE
CW - COLUMN WIDTH PANEL
DWD - HINDGED DOOR WITHIN HINGED DOOR
EGT - EXTENDED GUTTER TOP
EGB - EXTENDED GUTTER BOTTOM
EGSL - EXTENDED GUTTER LEFT HAND SIDE
EGSR - EXTENDED GUTTER RIGHT HAND SIDE
FL - FLUSH LOCK(S)

PANELBOARD ACCESSORIES
CL - COMPRESSION LUGS
FTL - FEED-THRU LUGS
GB - EQUIPMENT GROUND BAR KIT
GBI - GROUND BAR INSULATOR KIT
NBK - NEUTRAL BONDING KIT
PS - PREPARED CIRCUIT BREAKER SPACE
SB - SPLIT BUS
SER - SERVICE ENTRANCE RATING
SFB - SUB-FEED CIRCUIT BREAKER
SFL - SUB-FEED LUGS
CBB - TIN PLATED COPPER BUS BARS
ABB - TIN PLATED ALUMINUM BUS BARS
TRN - 200% RATED NEUTRAL BUS BAR
TVSS - TRANSIENT VOLTAGE SURGE SUPPRESSION

TIME SWITCH SCHEDULE

MARK	MANUFACTURER	MODEL #	EQUIPMENT SERVED	VOLTAGE	AMP	POLE	ENCLOSURE	NOTES
TS1	INTERMATIC	ET1125C	CONTACTOR LC1	208	30	2	NEMA 1	-
TS2	INTERMATIC	ET1105C	OUTSIDE LIGHTING	120	30	1	NEMA 1	-
TS3	INTERMATIC	ET1105C	BUILDING SIGNAGE	120	30	1	NEMA 1	-
TS4	INTERMATIC	ET1105C	SITE SIGNAGE	120	30	1	NEMA 1	-
TS5	INTERMATIC	ET1125C	FLAG POLE LIGHTING	208	30	2	NEMA 1	-

AUTOMATIC TRANSFER SWITCH SCHEDULE

MARK	LOAD		SWITCH		NEMA ENCLOSURE	NOTES & ACCESS.
	EQUIPMENT SERVED	VOLTAGE	AMP	POLE		
ATS1	MDP1	208	1200	3	1	1,2
ATS2	MDP2	208	1200	3	1	1,2

ACCESSORIES:
1. GROUND LUG KIT
2. SOLID NEUTRAL

PRINTED: 6/10/2025 5:04:36 PM

CJD
Engineering | Energy | Innovation
2225 West Chesterfield Boulevard, Suite 200, Springfield, MO 65807
P: 417.877.1700 F: 417.324.7735 www.cjd-eng.com
Missouri State Certificate of Authority #200502690366

Special Notice: Drawings prepared by CJD Engineering LLC are instruments of service for use solely with respect to this project. CJD Engineering LLC retains ownership and all common law, statutory law and other reserved rights including copyrights. This drawing shall not be reused in part or in full for any other work without prior written consent by and appropriate compensation to CJD Engineering LLC. Whosoever changes the design without prior written approval from CJD Engineering LLC, does so at their own risk and assumes full responsibility for any damages, liabilities or costs resulting directly or indirectly from such changes to the fullest extent of the law.

NIXA POLICE DEPARTMENT
NORTH LEEANN DRIVE
NIXA, MO 65714

INSIGHT DESIGN ARCHITECTS iDeA
112 S. Main St., Nixa, MO 65714 Ph: 417-724-8553

CJD engineering | Energy | Innovation

olsson

METTEMEYER ENGINEERING LLC

Chiodini ARCHITECTS
Architecture / Interior Design / Graphics
1401 S. Brentwood Blvd. / Suite 575 / St. Louis, Missouri 63144
314-725-5588 / arch@chiodini.com

Reissue Date

Professional of Record

STATE OF MISSOURI — ALLEN DAVIS — NUMBER PE-2004017155 — PROFESSIONAL ENGINEER

DATE 06.10.2025

Copyright 2025 ©
These prints are the property of the architect and shall be used only for the project referenced above

Drawn: JAR

Project #: 24-003

Date: 2025.06.10

Drawing Title: ELECTRICAL SCHEDULES

Sheet: E301

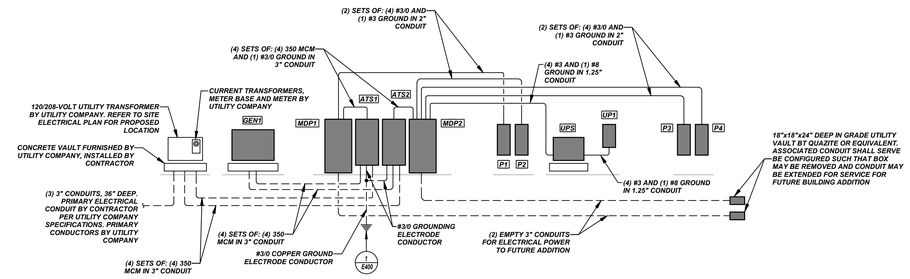

3 ELECTRICAL RISER DIAGRAM

NO SCALE

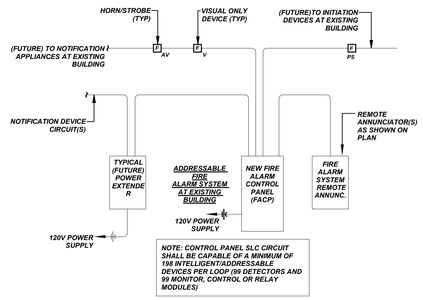

2 FIRE ALARM SYSTEM DIAGRAM

NO SCALE

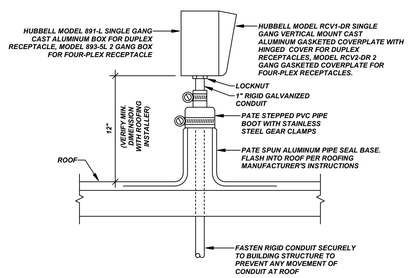

5 ROOF RECEPTACLE DETAIL

NO SCALE

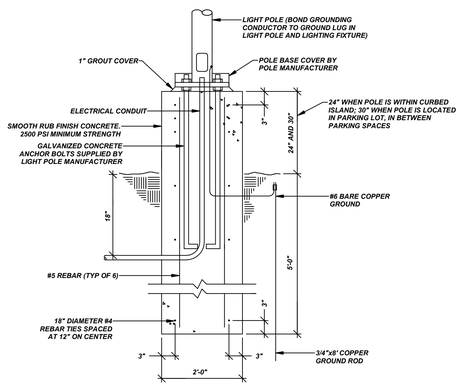

VERTICAL SECTION

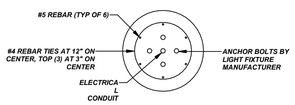

6 SITE LIGHTING POLE BASE

NO SCALE

NOTES:

1. OPERATION: OCCUPANCY SENSOR SWITCHES LIGHTS ON/OFF.
2. ALL WIRING SHALL BE IN CONDUIT.
3. CONTRACTOR SHALL ENSURE THAT BALLASTS ARE COMPATIBLE WITH CONTROL SYSTEM. PROGRAMMED START BALLASTS FOR OCCUPANCY SENSOR CONTROL.
4. REFER MANUFACTURER'S INSTALLATION INSTRUCTIONS FOR EXACT WIRING, EXACT INSTALLATION LOCATIONS, MINIMUM DISTANCE FROM WINDOWS, AND ETC.
5. PROVIDE ALL COMPONENTS FOR SETUP AND OPERATION OF SYSTEM.
6. MAXIMUM NUMBER OF SENSORS PER POWER PACK DEPENDS ON THE MODEL OF SENSOR. SEE THE PRODUCT DATA SHEET TO DETERMINE THE SPECIFIC CURRENT CONSUMPTION OF EACH SENSOR.
7. INSTALL POWER PACK NEAR LOCAL SWITCHING (IF APPLICABLE).

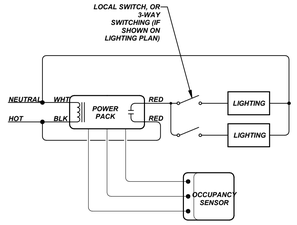

4 OCCUPANCY SENSORS WIRING DETAIL

NO SCALE

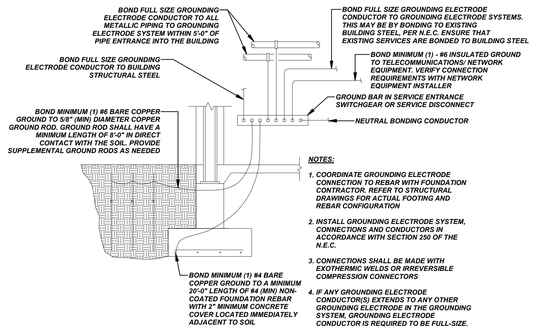

NOTES:

1. COORDINATE GROUNDING ELECTRODE CONNECTION TO REBAR WITH FOUNDATION CONTRACTOR. REFER TO STRUCTURAL DRAWINGS FOR ACTUAL FOOTING AND REBAR CONFIGURATION
2. INSTALL GROUNDING ELECTRODE SYSTEM, CONNECTIONS AND CONDUCTORS IN ACCORDANCE WITH SECTION 250 OF THE N.E.C.
3. CONNECTIONS SHALL BE MADE WITH EXOTHERMIC WELDS OR IRREVERSIBLE COMPRESSION CONNECTORS
4. IF ANY GROUNDING ELECTRODE CONDUCTOR(S) EXTENDS TO ANY OTHER GROUNDING ELECTRODE IN THE GROUNDING SYSTEM, GROUNDING ELECTRODE CONDUCTOR IS REQUIRED TO BE FULL-SIZE.

1 GROUNDING ELECTRODE DETAIL

NO SCALE

CJD
Engineering | Energy | Innovation
2225 West Chesterfield Boulevard, Suite 200, Springfield, MO 65807
P: 417.877.1700 F: 417.324.7735 www.cjd-eng.com
Missouri State Certificate of Authority #200502690366

Special Notice: Drawings prepared by CJD Engineering LLC are instruments of service for use solely with respect to this project. CJD Engineering LLC does not convey the rights to any intellectual property, including but not limited to rights including copyrights. This drawing shall not be reused in part or in full for any other work without prior written consent by and appropriate compensation to CJD Engineering LLC. Whoever changes the design without prior written approval from CJD Engineering LLC, does so at their own risk and assumes full responsibility for any damages, liabilities or costs resulting directly or indirectly from such changes to the fullest extent of the law.

NIXA POLICE DEPARTMENT

NORTH LEEANN DRIVE
NIXA, MO 65714

INSIGHT DESIGN IDeA ARCHITECTS
112 S. Main St., Nixa, MO 65714 Ph: 417-724-8553
CJD engineering | Energy | innovation
olsson
METTEMEYER ENGINEERING LLC
Christini ARCHITECTS
Architecture / Interior Design / Graphics
1401 S. Brentwood Blvd. / Suite 675 / St. Louis, Missouri 63144
314-725-0880 / arch@christini.com

Reissue Date

Professional of Record

STATE OF MISSOURI
ALLEN DAVIS
NUMBER
PE-2004017155
PROFESSIONAL ENGINEER

DATE 06.10.2025

Copyright 2025 ©
These prints are the property of the architect and shall be used only for the project referenced above

Drawn
JAR

Project #
24-003

Date
2025.06.10

Drawing Title:
ELECTRICAL DETAILS

Sheet:
E400

PRINTED: 6/10/2025 5:04:37 PM

AUDIO VIDEO EQUIPMENT SCHEDULE

THE EQUIPMENT LIST ABBREVIATIONS AND THE GENERAL TECHNOLOGY EQUIPMENT SCHEDULE ARE FOR THE CONVENIENCE OF THE CONTRACTOR. EACH CONTRACTOR SHALL BE RESPONSIBLE FOR VERIFICATION OF QUANTITIES AND SHALL FURNISH ALL MATERIAL REQUIRED, WHETHER SPECIFIED OR NOT, TO PRODUCE A SATISFACTORY WORKING SYSTEM.
CATALOG NUMBERS ARE NOT TO BE CONSIDERED COMPLETE BUT ARE GIVEN ONLY TO AID THE CONTRACTOR IN THE SEARCH FOR MATERIAL. NO MATERIAL SHALL BE ORDERED BY MANUFACTURER AND CATALOG NUMBER ONLY. EACH CONTRACTOR SHALL FIRST READ THE COMPLETE DESCRIPTION OF THE MATERIAL ON THESE DRAWINGS AND SPECIFICATIONS. THE FIRST MANUFACTURER LISTED IS THE BASIS OF DESIGN. "STANDARD COLOR" INDICATES FACTORY FINISH AVAILABLE AT NO ADDITIONAL CHARGE.

EQUIPMENT LIST ABBREVIATION	MANUFACTURER AND MODEL	EQUIPMENT LIST DESCRIPTION	NOTES
AV-FB	HUBBELL CFB7CVRALU	7 GANG CFB SERIES BOX FOR RECTANGULAR COVERS, 4.08" MINUMUMDEPTH OF POUR,INSTALLED WITH CFBOGPAN4 ON-GRADE BARRIER, CFB7CVRALU SURFACE COVER ASSEMBLY, 1/4" ALUMINUM BEVELED EDGING FOR CARPET	1.
AV-RK1,2,3	EWR-16-22SD	EWR SERIES PIVIOTING WALL RACK, 16U TALL, 22 INCHES DEEP	2.
AV-RK POWER	PD-815SC	PD SLIMHIGH DENSITY VERTICAL POWER STRIP, 8 OUTLET, 15 A	
AV-RK ACC		RACK BLANKS AND ACCESSORIES	
WB	CHIEF PAC525FCW	IN-WALL STORAGE BOX WITH FLANGE AND COVER	3.
MON		DUPLEX OUTLET AND 1 GANG LOW VOLTAGE BOX	6.
AV-MON-75	PANASONIC TH-75CQE2U	75" UHD 4K COMMERCIAL MONITOR	9.
AV-MON-65	PANASONIC TH-65CQE2U	65" UHD 4K COMMERCIAL MONITOR	9.
TV-MNT	SANUS VLF628-B1	HEAVY DUTY FULL MOTION TV WALL MOUNT WITH EXTRA LONG EXTENSION	2.
TV-CM	CRIMSON C63D-60A	DUAL BACK TO BACK SCREENS CEILING INSTALLATION KIT WITH 3' TO 5' EXTENSION DROP	2. 4. 8.
SPK	JBL CONTROL 226CT	6.5" CEILING LOUDSPEAKER TRANDUCER ASSEMBLY	
SPK-2	JBL CONTROL 65 P/T	5.25" COMPACT FULL RANGE PENDANT SPEAKER	
AV-AMP1	JBL CSA 1300Z	1 CHANNEL 300 WALL AUDIO AMPLIFIER	
AV-AMP2	JBL CSMA 1120	4 INPUT WITH 1 OUTPUT AMPLIFER WITH 120 WATTS OF POWER	
AV-PROC	CRESTRON CP4N	4-SERIES CONTROL SYSTEM	
TP-TT	CRESTRON TS-1070-GV-B-S	10.1 IN. TABLETOP TOUCH SCREEN, GOVERNMENT VERSION, BLACK SMOOTH	
TP-WP	CRESTRON TSW-1070-GV-B-S	10.1 WALL MOUNT TOUCH SCREEN, GOVERNMENT VERSION, BLACK SMOOTH	7.
AV-VS	CRESTRON HD-PS621	8X1 4K60 4:4:4 HDR PRESENTATION SYSTEM	
WP-TX1	CRESTRON HD-TXC-4KZ-101-1G-W	4K60 4:4:4 TRANSMITTER TO HDMI, RS-232, AND IR SIGNAL EXTENSION OVER CATx CABLE	
WP-RX1	CRESTRON HD-RXCA-4KZ-101	4K60 4:4:4 RECIEVER FOR HDMI, RS-232, AND IR SIGNAL EXTENSION OVER CATx CABLE	
AM	CRESTRON AM3-111 KIT	AIRMEDIA SERIES 3 KIT WITH AM-3100-WF RECIEVER AND AM-TX3-100 ADAPTOR	
DA1	CRESTRON DM-DA4-4K-C	1:4 HDMI TO DM 8G+ & HDBASET SPLITTER	
PS1	CRESTRON PW-5430DUS	1:4 HDMI TO DM 8G+ & HDBASET SPLITTER	
SW-1	LUXUL SW-100-04P	4 PORT UNMANAGED POE+ SWITCH	
DSP	SHURE INTELLIMIX P300	AUDIO CONFERENCE PROCESSOR	
CM	SHURE MXA920	MICROFLEX ADVANCE SQUARE 24" CEILING MICROPHONE ARRAY	
DT-MIC	SHURE MX412D/C	12 INCH CARDIOID GOOSENECK MICROPHONE WITH DESKTOPBASE AND PREAMP	
MIC-RX	SHURE SLXD124/85	WIRELESS SYSTEM WITH SLXD2/58 HANDHELD TRANSMITTER, SLXD1 BODYPACK TRANSMITTER AND WL185 LAVALIER MICROPHONE	
ANT	RF VENUE D-ARC	DIVERSITY ARCHITECTURAL ANTENNA	
APB	AUDIOPRESSBOX APB-P008-IW-EX	PASSIVE INWALL DESIGN PRESS BOX WITH 1 LINE INPUT, 8 MIC OUTPUTS	
DAC	DATAVIDEO DAC-91	2-CHANNEL SDI ANALOG AUDIO EMBEDDER	
TRAN	RDL TX-J2	UNBALANCED INPUT TRANSFORMER	
BT-1A	RDL D-BT1A	WALL MOUNT BLUETOOTH AUDIO FORMAT A INTERFACE	
BT-1X	RDL TX-TPR1A	ACTIVE SINGLE PAIR FORMAT A RECIEVER	
AV-VS	CRESTRON HD-PS621	8X1 4K60 4:4:4 HDR PRESENTATION SYSTEM	
WP-TX1	CRESTRON HD-TXC-4KZ-101-1G-W	4K60 4:4:4 TRANSMITTER TO HDMI, RS-232, AND IR SIGNAL EXTENSION OVER CATx CABLE	
WP-RX1	CRESTRON HD-RXCA-4KZ-101	4K60 4:4:4 RECIEVER FOR HDMI, RS-232, AND IR SIGNAL EXTENSION OVER CATx CABLE	
SDI/USB	EPIPHAN AV.IO SDI+	SDI TO USB VIDEO CAPTURE DEVICE	
AV-CAM	PTZ OPTICS PT20X-SE-WH-G3	SDI/HDMI/USB/IPPTZ CAMERA 20X OPTICAL ZOOM (WHITE)-WALL MOUNT REQUIRED	
HD	C2G 29870	SINGLE GAND HDMI WALLPLATE WITH PASS THROUGH	5.

AUDIO VISUAL EQUIPMENT SCHEDULE NOTES

1. E. C. PROVIDED AND INSTALLED WITH AC OUTLET IN BOX 1 ¼" CONDUIT TO ACCESSIBLE CEILING
2. A. V. C. PROVIDED AND INSTALLED
3. A. V. C. PROVIDED, E. C. INSTALLED AT HIEGHTS SHOWN ON T-1. 1 ¼" CONDUIT TO ACCESSIBLE CEILING AND DUPLEX AC OUTLET, L. V. C.INSTALL 1 DATA JACK
4. AC OUTLET REQUIRED TO BE INSTALLED IN CEILING ABOVE TV LOCATION
5. E. C. PROVIDED AND INSTALLED ELECTRICAL BOX INSTALLED BELOW WB LOCATION WITH SINGLE GANG OPENING INSTALLED OUTLET HEIGHT AND 1 ¼" TO WB OR MON ABOVE
6. E. C. PROVIDED AND INSTALLED AT HIEGHTS SHOWN ON T-1. DUPLEX AC OUTLET AND 2 GANG BOX WITH 1 GANG MUD RING WITH 1 ¼" CONDUIT TO ACCESSIBLE CEILING, L. V. C.INSTALL 1 DATA JACK
7. E. C PROVIDE AND INSTALL 2 GANG BOX AT 42" WITH 1 GANG MUDRING WITH ¾" CONDUIT TO ACCESSIBLE CEILING
8. E. C. PROVIDE AND INSTALL2 GANG BOX AT 42" WITH 1 GANG MUDRING WITH ¾" CONDUIT TO ACCESSIBLE CEILING AND QUAD AV OUTLET AT TV LOCATION IN DROP CEILING
9. A. V C. PROVIDE TV-MNT OR TV-CM AS REQUIRED

SUGGESTED MATRIX OF RESPONSIBILITY

ITEMS:	SHOWN ON:	FURISHED BY:	INSTALLED BY:	NOTES:
AUDIO VIDEO ROUGH-IN, REFER TO AUDIO VIDEO EQUIPMENT SCHEDULE AND SPECIFICATIONS FOR DEFINITION	T SERIES	E. C.	E. C.	3. 4. 17.
AUDIO VISUAL CABLE HANGERS AND SUPPORTS OR OTHER CABLE ROUTING METHODS (OTHER THAN CONDUIT OT CABLE TRAY)	T SERIES	A. V. C.	A. V. C.	
LOW VOLTAGE CABLING FOR THE AUDIO VISUAL SYSTEM	T SERIES	A. V. C.	A. V. C.	12. 13. 14.
AUDIO VIDEO OUTLETS FACEPLATES, JACKS, AND TERMINATIONS	T SERIES	A. V. C.	A. V. C.	12. 13. 14.
COUNDUIT SLEEVES FOR AUDIO VISUAL	T SERIES	E. C.	E. C.	17.
AUDIO VIDEO SYSTEMS ROUGH-IN	T SERIES	A. V. C.	A. V. C.	1.
AUDIO VIDEO EQUIPMENT, CABLING, AND TERMINATIONS	T SERIES	A. V. C.	A. V. C.	2.
GROUNDING LUGS ON AUDIO VIDEO EQUIPMENT	T SERIES	A. V. C.	A. V. C.	6.
BONDING SYSTEM FOR AUDIO VIDEO SYSTEM	T SERIES	E. C.	E. C.	7.
CONNECTION OF THE AUDIO VIDEO BONDING SYSTEM TO THE ELECTRICAL GROUND	T SERIES	E. C.	E. C.	
LINE VOLTAGE POWER (+120 VOLTS OR GREATER) FOR AUDIO VISUAL DEVICES	T SERIES	E. C.	E. C.	
AUDIO VISUAL LINE VOLTAGE POWER (NOT SHOWN BUT REQUIRED FOR PROPER INSTALLATION OF SYSTEM)	T SERIES	A. V. C.	A. V. C.	15.
AUDIO VISUAL PROGRAMMING AND COMMISIONING	T SERIES	A. V. C.	A. V. C.	11.
COUNDUIT SLEEVES FOR DATA CABLING	T SERIES	E. C.	E. C.	17.
DATA CABLING CABLE HANGERS AND SUPPORTS OR OTHER CABLE ROUTING METHODS (OTHER THAN CONDUIT OT CABLE TRAY)	T SERIES	L. V. C.	L. V. C.	16.
DATA CABLING ROUGH-IN, REFER TO LOW VOLTAGE EQUIPMENT SCHEDULE AND SPECIFICATIONS FOR DEFINITION	T SERIES	L. V. C.	L. V. C.	16.
COUNDUIT SLEEVES FOR DATA CABLING	T SERIES	E. C.	E. C.	2. 4.
LADDER RACK	T SERIES	L. V. C.	L. V. C.	
DATA CABLING, DATA CABLING RACKS, PATCH PANELS, RACK TERMINATIONS AND END POINT TERMINATIONS	T SERIES	L. V. C.	L. V. C.	2. 4. 16.
GROUNDING LUGS ON DATA EQUIPMENT	T SERIES	L. V. C.	L. V. C.	
BONDING SYSTEM FOR DATA SYSTEM	T SERIES	E. C.	E. C.	7.
CONNECTION OF THE DATA RACKS TO THE ELECTRICAL GROUND	T SERIES	E. C.	E. C.	7.
ACCESS CONTROL DOOR HARDWARE AND INSTALLATION	T SERIES	G. C.	G. C.	10.
ACCESS CONTROL CABLING	T SERIES	L. V.	L. V.	
ACCESS CONTROL CONTROLLER AND TERMINATIONS AT DOOR AND CONTROLLER	T SERIES	A. C. C.	A. C. C.	
ACCESS CONTROL PROGRAMMING AND CONFIGURATION	T SERIES	A. C. C.	A. C. C.	
SECURITY CAMERA CABLING	T SERIES	L. V.C.	L. V. C.	
CAMERA HARDWARE AND INSTALLATION	T SERIES	A. C. C.	A. C. C.	
CAMERA HARDWARE AND INSTALLATION	T SERIES	A. C. C.	A. C. C.	
ACCESS POINT CABLING	T SERIES	L. V. C.	L. V. C.	
NETWORK EQUIPMENT, ACCESS POINTS, UPS'S, PDU'S, PATCH CABLES	T SERIES	OWNER	OWNER	
PANIC BUTTON CABLING	T SERIES	L. V. C.	L. V. C.	
PANIC BUTTON	T SERIES	A. C. C.	A. C. C.	
ANTENNA DISTRIBUTION SYSTEM CABLING AND HARDWARE	T SERIES	A. V. C.	A. V. C.	

SUGGESTED MATRIX OF RESPONSIBILITY NOTES

E. C.-ELECTRICAL CONTRACTOR, L. V. C.-LOW VOLTAGE CONTRACTOR, A. V. C.-AUDIO VISUAL CONTRACTOR SCOPES ARE ALL RECONSIBLITY OF G. C.-GENERAL CONTRACTOR

A. C. C.-ACCESS CONTROL CONTRACTOR SCOPE IS PROVIDED BY OWNER THROUGH EXISTING CONTRACT

1. LOCATIONS OF AUDIO VIDEOS ROUGH-INS SHALL BE INDICATED BY THE INFORMATION OUTLET SYMBOLS ON THE DRAWINGS. REFER TO THE AUDIO VIDEO SYMBOL LIST FOR ADDITIONAL INFORMATION.
2. BASED ON THE INHERENT DIFFERENCES IN PRODUCTS FROM VARIOUS MANUFACTURERS, ALL REQUIRED EQUIPMENT MAY NOT BE SHOWN ON THE DRAWINGS FOR ALL ACCEPTABLE MANUFACTURERS.
3. INCLUDE BACKBOXES AND CONDUIT REQUIRED FOR THE AUDIO VIDEO SYSTEMS INSTALLATION. THE E.C. SHALL BASE THE BID ON THE BASIS OF DESIGN SHOWN ON THE CONTRACT DOCUMENTS.SLEEVE REQUIRE TO BE INSTALLED AS NEEDED
5. UNLESS TRADE RULES DICTATE OTHERWISE.
6. FURNISHED AS PART OF THE EQUIPMENT WHEN POSSIBLE, OR FURNISHED TO THE E.C. FOR INSTALLATION IN THE FIELD.
7. INCLUDES ALL CONDUCTORS, GROUND BARS, AND TERMINATIONS FOR THE COMPLETE BONDING SYSTEM REQUIRED BY THE SPECIFICATIONS.
9. LOCATIONS OF LOW VOLTAGE ROUGH-INS SHALL BE INDICATED BY THE INFORMATION OUTLET SYMBOLS ON THE DRAWINGS. REFER TO THE AUDIO VIDEO SYMBOL LIST FOR ADDITIONAL INFORMATION.
10. ELECTRONIC LOCK TO PROVIDED AND INSTALLED BY G.C. AS PART OF DOOR LOCK INSTALLATION DOOR LOCK WIRING NEEDS TO BE RAN TO THE JUNCTION BOX ABOUT DOOR.
11. CRESTRON PROGRAMMING MUST BE COMPLETED BY THE AUDIO VIDEO CONTRACTORS ON STAFF CRESTON CERTIFEID PROGRAMMER AND LAYOUT AND FUNCTIONALITY NEEDS TO BE SIGNED OFF BY OWNER BEFORE COMPLETION OF PROGRAMMING. CITY OF NIXA OWNS ALL SOURCE CODE AND AT COMPLETION OF PROJECT CONTRACTOR MUST PROVIDE ALL SOUCE CODE TO CITY OF NIXA.
12. ALL AV DATA TO BE TERMINATED IN RACK TO A BELDEN KEYCONNECT DATA PATCH PANEL USING BELDEN RV6MJKUBK KEYSTONE CONNECTORS AND CONNECTED WITH PATCH CABLES TO AV EQUIPMENT.
13. DATA CABLING MUST INCLUDE A 25 YEAR WARRANTY FROM MANUFACTURE. WARRANTY STATEMENT MUST BE PRODIVED AT COMPLETION OF PROJECT.
14. AV DATA CABLING INSTALLATION MUST BE INSTALLED PER BISCI STANDARDS AND INSTALLATION MANAGED BY THE CONTRACTORS ON STAFF BISCI TECHNICIAN.
15. AV INSTALLATION MUST BE INSTALLED PER AVIXA STANDARDS AND INSTALLATION ONERSEEN BY THE AUDIO VIDEO CONTRACTORS ON STAFF AVIXIA CST-I CERTIFIED PROFESSIONAL.
16. DATA CABLING INSTALLATION MUST BE INSTALLED PER BISCI STANDARDS AND INSTALLATION MANAGED BY THE CONTRACTORS ON STAFF BISCI TECHNICIAN
17. EXPOSED CABLE IS NOT ALLOWED. CONDUIT REQUIRED FOR ALL AREAS THAT HAVE EXPOSED CEILING

LOW VOLTAGE EQUIPMENT SCHEDULE

THE EQUIPMENT LIST ABBREVIATIONS AND THE GENERAL TECHNOLOGY EQUIPMENT SCHEDULE ARE FOR THE CONVENIENCE OF THE CONTRACTOR. EACH CONTRACTOR SHALL BE RESPONSIBLE FOR VERIFICATION OF QUANTITIES AND SHALL FURNISH ALL MATERIAL REQUIRED, WHETHER SPECIFIED OR NOT, TO PRODUCE A SATISFACTORY WORKING SYSTEM.
CATALOG NUMBERS ARE NOT TO BE CONSIDERED COMPLETE BUT ARE GIVEN ONLY TO AID THE CONTRACTOR IN THE SEARCH FOR MATERIAL. NO MATERIAL SHALL BE ORDERED BY MANUFACTURER AND CATALOG NUMBER ONLY. EACH CONTRACTOR SHALL FIRST READ THE COMPLETE DESCRIPTION OF THE MATERIAL ON THESE DRAWINGS AND SPECIFICATIONS. THE FIRST MANUFACTURER LISTED IS THE BASIS OF DESIGN. "STANDARD COLOR" INDICATES FACTORY FINISH AVAILABLE AT NO ADDITIONAL CHARGE.

EQUIPMENT LIST ABBREVIATION	MANUFACTURER AND MODEL	EQUIPMENT LIST DESCRIPTION	
D-RK	TRIPP LITE SR42UB	4 POST DATA RACK	
CRW	CHATSWORTH 10250-712	UNIVERSAL CABLE RUNWAY; 12"W x 1.5"H x 9.96'L; BLACK	8. 9.
FB ▼	HUBBELL CFB7G4	7 GANG CFB SERIES BOX,INSTALLED WITH CFBOGPAN4 ON-GRADE BARRIER, CFB7CVRALU SURFACE COVER ASSEMBLY, 1/4" ALUMINUM BEVELED EDGING FOR CARPET	1. 7.
D-FB	HUBBELL SISFBCR	ROUND FLUSH FLOORBOX FOR FURITURE DATA CABING	1. 7. 12.
E-FB	HUBBELL SISFBCR	ROUND FLUSH FLOORBOX FOR FURITURE ELECTRICAL	1. 7. 12.
▼	D-RK	WALL DATA OUTLET, CONDUIT TO ACCESSIBLE CEILING, DATA QUANITY PER PRINTS, JACK TYPE RV6MJKUBL, PLATE TYPE AX102007 STAINLESS STEEL OR EQUIVILANT	3. 5. 6. 10.
AP	ACCESS POINT	CEILING MOUNT ACCESS POINT, 1 DATA CABLE PER AP,JACK TYPE RV6MJKUBL IN SURFACE MOUNT BOX, CONDUIT REQUIRED IN EXPOSED CEILINGS	1. 3. 5. 6.
OUTDOOR AP	ACCESS POINT	OUTDOOR MOUNT ACCESS POINT, 1 DATA PER AP, WALL BOX WITH CONDUIT TO ACCESSIBLE CEILING, JACK TYPE RV6MJKUBL IN AX102652 SMB	1. 3. 5. 6.
INT	WALL MOUNT INTERCOM	INTERCOM, WALL BOX MOUNTED AT 42" WITH ¾" CONDUIT TO ACCESSIBLE CEILING, I DATA CABLE PER INERCOM TERMINATED WITH RV6MJKUBL	2.
CAM	SECURITY CAMERA	CEILING MOUNT SECURITY CAMERA, 1 DATA CABLE PER AP TERMINATED WITH RV6MJKUBL	1. 2. 3. 5. 6.
OD CAM	OUTDOOR CAMERA	OUTDOOR MOUNTED CAMERA, 1 DATA PER AP, WALL BOX WITH CONDUIT TO ACCESSIBLE CEILING, TERMINATED WITH RV6MJKUBL, IN AX102652 SMB	1. 2. 3. 5. 6. 10.
DC	DOOR ACCESS CONTROL	E. C. TO INSTALL CONDUIT PER DOOR ACCESS CONTROL DIAGRAM	2.
CR	CARD READER	CARD READER, WALL BOX MOUNTED AT 36" WITH ¾" CONDUIT PER DOOR ACCESS CONTROL DIAGRAM	2.
PB	PANIC BUTTON	PANIC BUTTON, WALL BOX WITH CONDUIT TO ACCESSIBLE CEILING	2. 11.
PB-UC	PANIC BUTTON	PANIC BUTTON, UNDER COUNTER WALL BOX WITH CONDUIT TO ACCESSIBLE CEILING	2. 11.
VAULT		POLYMER CONCRETE HANDHOLE VAULT, 17" X 30' X REQUIRED DEPTH	1. 2.

LOW VOLTAGE EQUIPMENT SCHEDULE NOTES

1. VERIFY LOCATION WITH ARCHITECT
2. VERIFY LOCATION WITH ARCHITECT AND ACCESS CONTROL PROVIDER
3. ALL DATA TO BE TERMINATED IN RACK TO A BELDEN KEYCONNECT DATA PATCH PANEL
5. DATA CABLING MUST INCLUDE A 25 YEAR WARRANTY FROM MANUFACTURE
6. DATA CABLING INSTALLATION MUST BE INSTALLED PER BISCI STANDARDS AND INSTALLATION MANAGED BY THE CONTRACTORS ON STAFF BISCI TECHNICIAN
7. HUBBELL FLOOR BOX PARTS PROVIDED AND INSTALLED BY E. C.WITH AC OUTLET IN BOX AND 1 ¼" CONDUIT TO ACCESSIBLE CEILING
8. MOUNT WITH CHATSWORTH ACCESSORIES AS REQUIRED
9. INSTALLED BY L. V. C.
10. E. C. TO PROVIDE AND INSTALL ELECTRICAL BOX WITH 1 GANG OPENING OUTLET HEIGHT WILL ¾" CONDUIT TO ACCESSIBLE CEILING
11. E. C. TO PROVIDE AND INSTALL ELECTRICAL BOX WITH 1 GANG OPENING SWITCH HEIGHT WILL ¾" CONDUIT TO ACCESSIBLE CEILING
12. E.C. TO PROVIDE AND INSTALL FLOOR POCKET AND APPRORIATE COVER FOR POWER FOR FURNITURE WITH PROPER CONDUIT

CABLING EQUIPMENT SCHEDULE

THE EQUIPMENT LIST ABBREVIATIONS AND THE GENERAL TECHNOLOGY EQUIPMENT SCHEDULE ARE FOR THE CONVENIENCE OF THE CONTRACTOR. EACH CONTRACTOR SHALL BE RESPONSIBLE FOR VERIFICATION OF QUANTITIES AND SHALL FURNISH ALL MATERIAL REQUIRED, WHETHER SPECIFIED OR NOT, TO PRODUCE A SATISFACTORY WORKING SYSTEM.
CATALOG NUMBERS ARE NOT TO BE CONSIDERED COMPLETE BUT ARE GIVEN ONLY TO AID THE CONTRACTOR IN THE SEARCH FOR MATERIAL. NO MATERIAL SHALL BE ORDERED BY MANUFACTURER AND CATALOG NUMBER ONLY. EACH CONTRACTOR SHALL FIRST READ THE COMPLETE DESCRIPTION OF THE MATERIAL ON THESE DRAWINGS AND SPECIFICATIONS. THE FIRST MANUFACTURER LISTED IS THE BASIS OF DESIGN. "STANDARD COLOR" INDICATES FACTORY FINISH AVAILABLE AT NO ADDITIONAL CHARGE.

WIRE TYPE	MANUFACTURER AND MODEL	EQUIPMENT LIST DESCRIPTION	WIRE TYPE
SPEAKER CABLE	LIBERTY 16-2C-P	COMMERCIAL GRADE GENERAL PURPOSE 16 AWG 2-CONDUCTOR PLEMUN CABLE	
SDI	LIBERTY 18-CMP	SERIAL DIGITAL RG6 DUAL SHIELDED 4.5 GHZ PLENUL COAXIAL CABLE	
LINE AUDIO	LIBERTY 22-2C-PSH	AUDIO AND CONTROL 22 AWG 1-PARI SHIELDED PLENUM	
AUDIO VISUAL DATA	BELDEN 6P4P24-WH-P-BED-APIBDN-CE	Category 6+ Horizontal, 4 Pair F/ UTP, LS-PVC Jacket, CMP Cable, WHITE, 1000 Ft Box	
LOW VOLTAGE DATA	BELDEN 6P4P24-WH-P-BED-APIBDN-CE	Category 6+ Horizontal, 4 Pair F/ UTP, LS-PVC Jacket, CMP Cable, WHITE, 1000 Ft Box	
TELEVISION COAX	LIBERTY RG6-P-CATV-BLK	100' BLACK RG6 CCS DUAL SHIELDED COAXIAL PLENUM CABLE SWEPT TO 3.0 GHZ TERMINATED WITH CM-RG6M-F F CONNECTORS	
HDMI PREMADE	LIBERTY HALO	LIBERTY HALO SERIES HIGH SPEED HDMI WITH ETHERNET CABLES	
Door	GENESIS 32961002	PLENIUM COMPOSITE ACCESS CONTROL CABLE, 1O00' REEL, YELLOW	
HDBT	LIBERTY 24-4P-P-L6SH-WHT	WHITE CATAGORY 6 F/UTP EN SERIES 23 AWG 4 PAIR SHIELDED CABLE	
FIBER	CORNING S-OP-12-LT-A-3U-BK-SIC-B	FIBER OPTIC CABLE, BLACK, SINGLEMODE (OS2), 12 FIBER	

FIBER EQUIPMENT SCHEDULE

THE EQUIPMENT LIST ABBREVIATIONS AND THE GENERAL TECHNOLOGY EQUIPMENT SCHEDULE ARE FOR THE CONVENIENCE OF THE CONTRACTOR. EACH CONTRACTOR SHALL BE RESPONSIBLE FOR VERIFICATION OF QUANTITIES AND SHALL FURNISH ALL MATERIAL REQUIRED, WHETHER SPECIFIED OR NOT, TO PRODUCE A SATISFACTORY WORKING SYSTEM.
CATALOG NUMBERS ARE NOT TO BE CONSIDERED COMPLETE BUT ARE GIVEN ONLY TO AID THE CONTRACTOR IN THE SEARCH FOR MATERIAL. NO MATERIAL SHALL BE ORDERED BY MANUFACTURER AND CATALOG NUMBER ONLY. EACH CONTRACTOR SHALL FIRST READ THE COMPLETE DESCRIPTION OF THE MATERIAL ON THESE DRAWINGS AND SPECIFICATIONS. THE FIRST MANUFACTURER LISTED IS THE BASIS OF DESIGN. "STANDARD COLOR" INDICATES FACTORY FINISH AVAILABLE AT NO ADDITIONAL CHARGE.

Location	MANUFACTURER AND MODEL	EQUIPMENT LIST DESCRIPTION	NOTES
SERVER 127	CORNING CCH-002	CLOSET CONNECTOR HOUSING (CCH) TWO RACK UNITS, HOLDS FOUR CCH CONNECTOR PANELS	
SERVER 127	CORNING RMB-CASS-12C QTY 4	CCH PIGTAILED SPLICE CASSETTE 12 F, LC UPC DUPLEX, SINGLE-MODE (OS2), SINGLE-FIBER	
PARKING LOT CAM 1	CORNING RMB-CASS-12C	CCH PIGTAILED SPLICE CASSETTE 12 F, LC UPC DUPLEX, SINGLE-MODE (OS2), SINGLE-FIBER	
PARKING LOT CAM 2	CORNING RMB-CASS-12C	CCH PIGTAILED SPLICE CASSETTE 12 F, LC UPC DUPLEX, SINGLE-MODE (OS2), SINGLE-FIBER	
PARKING LOT GATE 1	CORNING RMB-CASS-12C	CCH PIGTAILED SPLICE CASSETTE 12 F, LC UPC DUPLEX, SINGLE-MODE (OS2), SINGLE-FIBER	
PARKING LOT GATE 2	CORNING RMB-CASS-12C	CCH PIGTAILED SPLICE CASSETTE 12 F, LC UPC DUPLEX, SINGLE-MODE (OS2), SINGLE-FIBER	

NIXA POLICE DEPARTMENT
305 N LEEANN DR
NIXA, MO 65714

112 S. Main St., Nixa, MO 65714 Ph: 417-724-8553

Architecture / Interior Design / Graphics
1401 S. Brentwood Blvd. / Suite 575 / St. Louis, Missouri 63144
314-725-5588 / arch@chiodini.com

Reissue Date

Professional of Record

DRAWINGS: FOR REFERENCE ONLY

DATE

Copyright 2025 ©
These prints are the property of the architect and shall be used only for the project referenced above

Architect: LMH / NPR

Project #: 24-003

Date: 2025.06.10

Drawing Title: SPECIFICATIONS

Sheet: T-0

NIXA POLICE DEPARTMENT
305 N LEEANN DR
NIXA, MO 65714

IDEA ARCHITECTS
112 S. Main St., Nixa, MO 65714 Ph: 417-724-8553
CJD Engineering | Energy | Innovation
olsson
METTEMEYER ENGINEERING LLC
Chiodini ARCHITECTS
Architecture / Interior Design / Graphics
1401 S. Brentwood Blvd. / Suite 575 / St. Louis, Missouri 63144
P: 314-725-5588 / mail@chiodini.com

Reissue Date

Professional of Record

DRAWINGS: FOR REFERENCE ONLY

DATE

Copyright 2025 ©
These prints and are the property of the architect and shall be used only for the project referenced above.

Architect: LMH / NPR

Project #: 24-003

Date: 2025.06.10

Drawing Title: Special Systems Floor Plan

Sheet: T-1.1

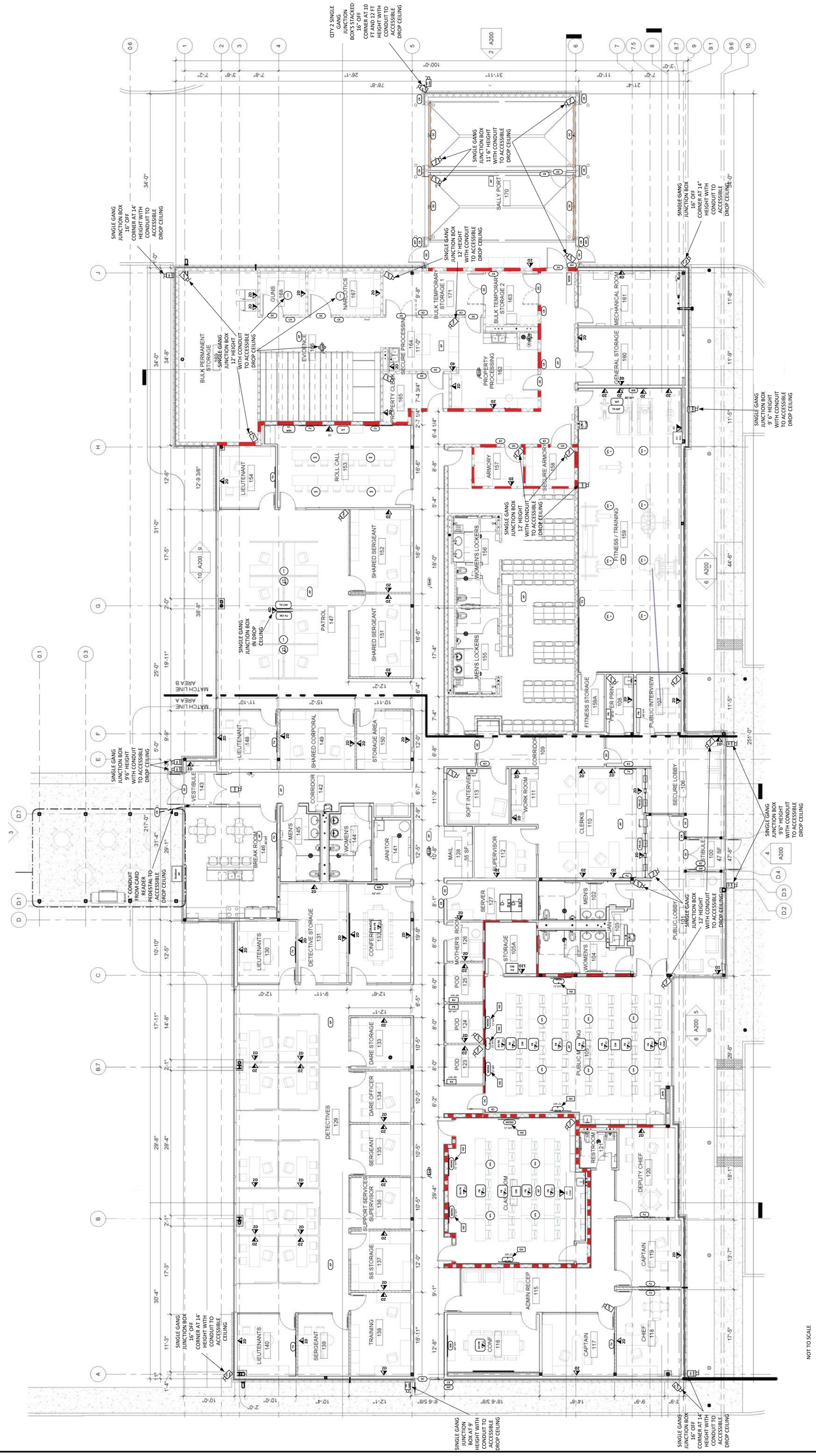

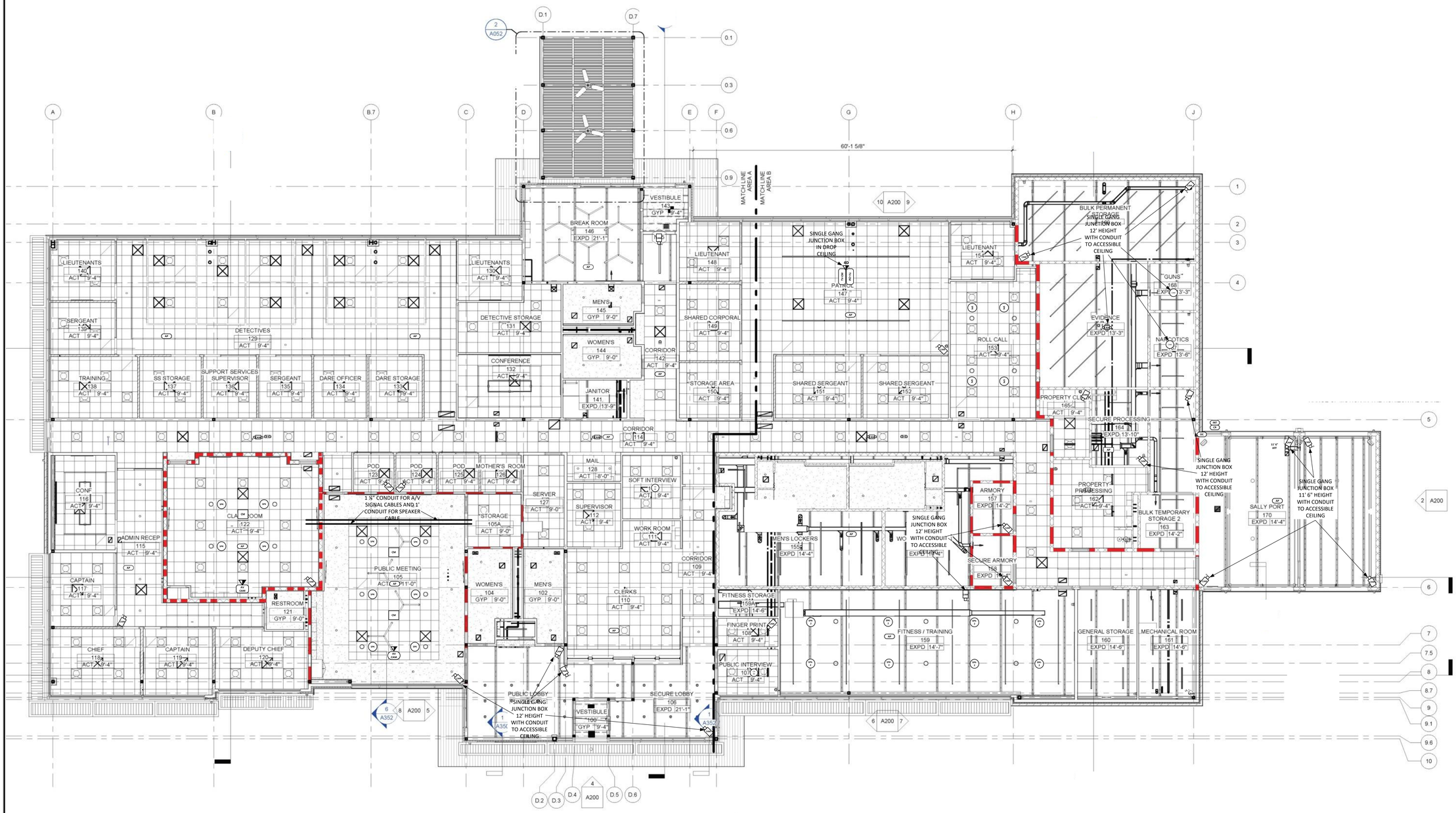

NOT TO SCALE

NIXA POLICE DEPARTMENT

305 N LEEANN DR
NIXA, MO 65714

INSIGHT DESIGN IDeA ARCHITECTS
112 S. Main St., Nixa, MO 65714 Ph: 417-724-8553
CJD Engineering | Energy | Innovation
olsson
METTEMEYER ENGINEERING LLC
Chiodini ARCHITECTS
Architecture / Interior Design / Graphics
1401 S. Brentwood Blvd. / Suite 575 / St. Louis, Missouri 63144
314-725-5588 / arch@chiodini.com

Reissue Date

Professional of Record

DRAWINGS: FOR REFERENCE ONLY

DATE

Copyright 2025 ©
These prints are the property of the architect and shall be used only for the project referenced above

Architect
LMH / NPR

Project #
24-003

Date
2025.06.10

Drawing Title:
Special Systems Reflected Ceiling Plan

Sheet
T-1.2

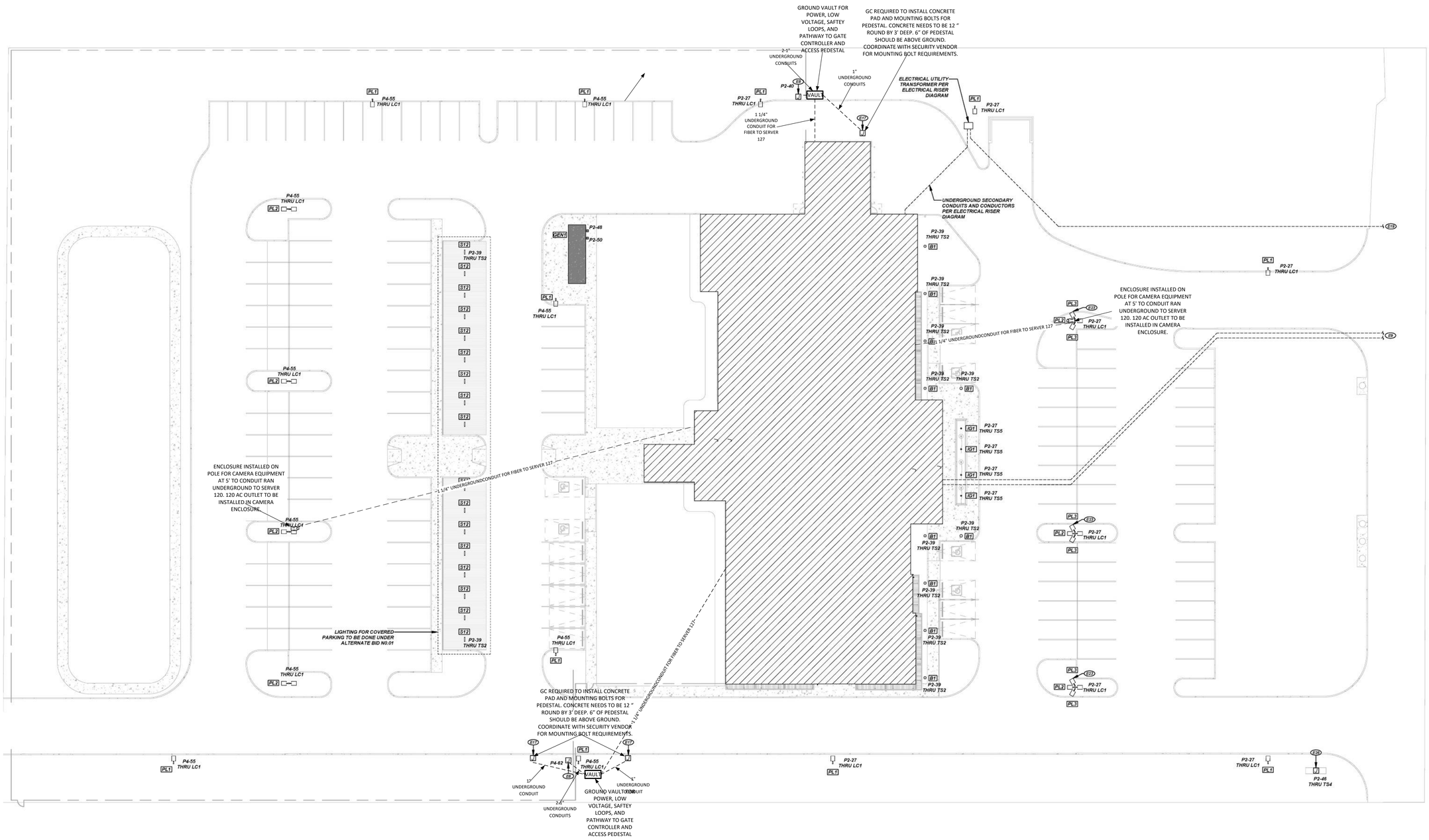

NIXA POLICE DEPARTMENT

305 N LEEANN DR
NIXA, MO 65714

INSIGHT DESIGN IDeA ARCHITECTS
112 S. Main St., Nixa, MO 65714 Ph: 417-724-8553

CJD Engineering | Energy | Innovation
olsson
METTEMEYER ENGINEERING LLC
Chiodini ARCHITECTS
Architecture / Interior Design / Graphics
1401 S. Brentwood Blvd. / Suite 575 / St. Louis, Missouri 63144
314-725-5588 / arch@chiodini.com

Reissue Date

Professional of Record

DRAWINGS: FOR REFERENCE ONLY

DATE

Copyright 2025 ©
These prints are the property of the architect and shall be used only for the project referenced above

Architect
LMH / NPR

Project #
24-003

Date
2025.06.10

Drawing Title:
Special Systems Site Plan

Sheet
T-1.3

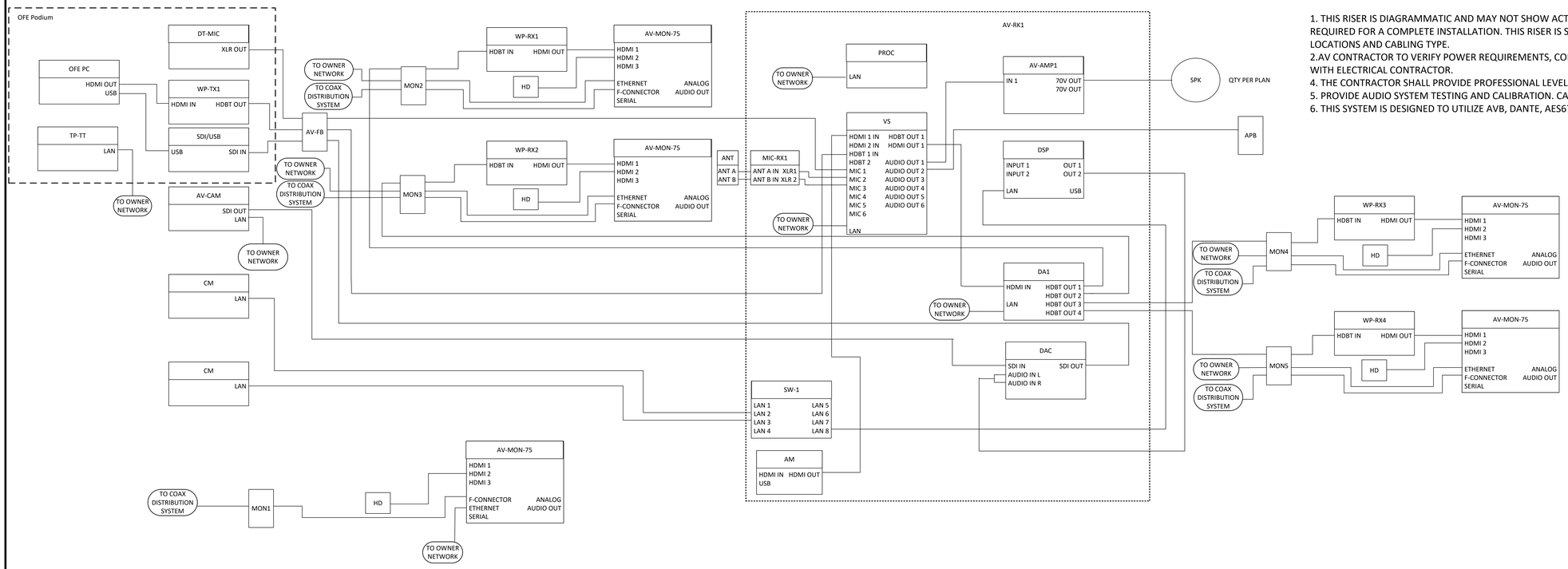

105 PUBLIC MEETING AUDIO VISUAL AV RISER DIAGRAM

NOTES:

1. THIS RISER IS DIAGRAMMATIC AND MAY NOT SHOW ACTUAL ROUTING, QUANTITIES, OR ALL CABLING REQUIRED FOR A COMPLETE INSTALLATION. THIS RISER IS SHOWN FOR CLARIFICATION OF CONNECTIONS, LOCATIONS AND CABLING TYPE.
2.AV CONTRACTOR TO VERIFY POWER REQUIREMENTS, CONNECTIONS, AND LOCATIONS FOR AV DEVICES WITH ELECTRICAL CONTRACTOR.
4. THE CONTRACTOR SHALL PROVIDE PROFESSIONAL LEVEL CALIBRATION TO THIS DISPLAY.
5. PROVIDE AUDIO SYSTEM TESTING AND CALIBRATION. CALIBRATION BY EAR IS NOT ACCEPTABLE.
6. THIS SYSTEM IS DESIGNED TO UTILIZE AVB, DANTE, AES67, AND AVOIP.

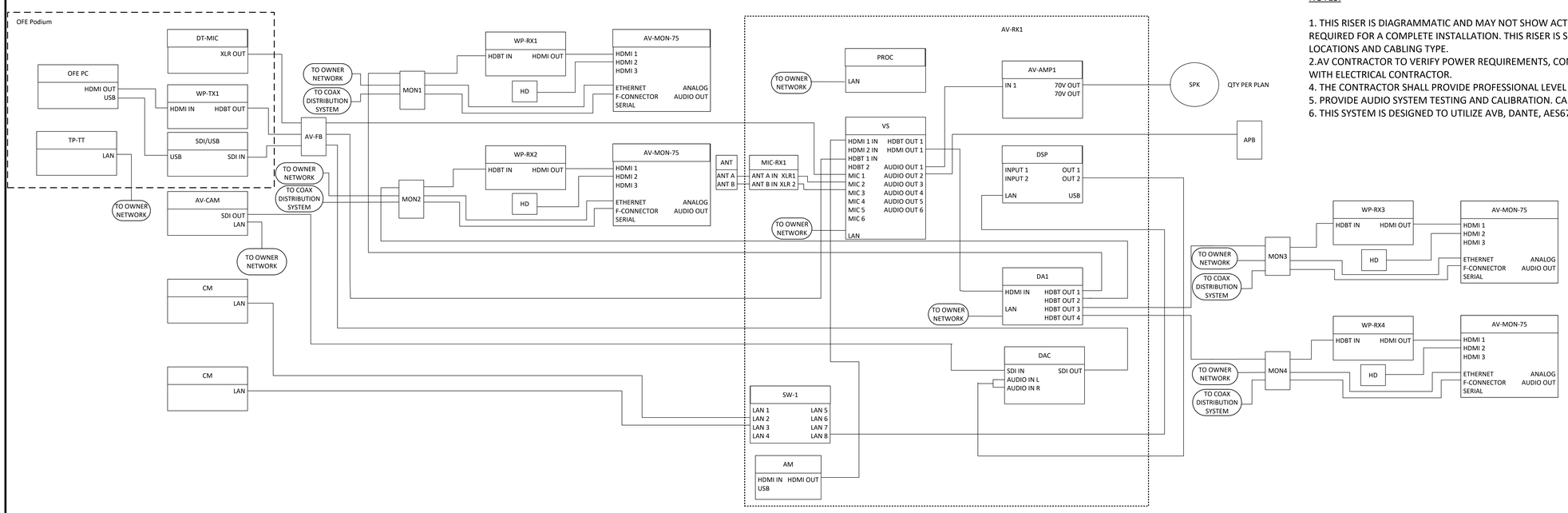

123 CLASSROOM AUDIO VISUAL AV RISER DIAGRAM

NO SCALE

NOTES:

1. THIS RISER IS DIAGRAMMATIC AND MAY NOT SHOW ACTUAL ROUTING, QUANTITIES, OR ALL CABLING REQUIRED FOR A COMPLETE INSTALLATION. THIS RISER IS SHOWN FOR CLARIFICATION OF CONNECTIONS, LOCATIONS AND CABLING TYPE.
2.AV CONTRACTOR TO VERIFY POWER REQUIREMENTS, CONNECTIONS, AND LOCATIONS FOR AV DEVICES WITH ELECTRICAL CONTRACTOR.
4. THE CONTRACTOR SHALL PROVIDE PROFESSIONAL LEVEL CALIBRATION TO THIS DISPLAY.
5. PROVIDE AUDIO SYSTEM TESTING AND CALIBRATION. CALIBRATION BY EAR IS NOT ACCEPTABLE.
6. THIS SYSTEM IS DESIGNED TO UTILIZE AVB, DANTE, AES67, AND AVOIP.

NIXA POLICE DEPARTMENT
305 N LEEANN DR
NIXA, MO 65714

INSIGHT DESIGN iDeA ARCHITECTS
112 S. Main St. Nixa, MO 65714 Ph: 417-724-8553
CJD Engineering | Energy | Innovation
olsson
METTEMEYER ENGINEERING LLC
Christine ARCHITECTS
Architecture / Interior Design / Graphics
1401 S. Brentwood Blvd. | Suite 570 | St. Louis, Missouri 63144
314-725-5580 | info@christine.com

Reissue Date

Professional of Record

DRAWINGS: FOR REFERENCE ONLY

DATE

Copyright 2025 ©
These prints are the property of the architect and shall be used only for the project referenced above

Architect
LMH / NPR

Project #
24-003

Date
2025.06.10

Drawing Title:
AV RISER DIAGRAM

Sheet
T-2.1

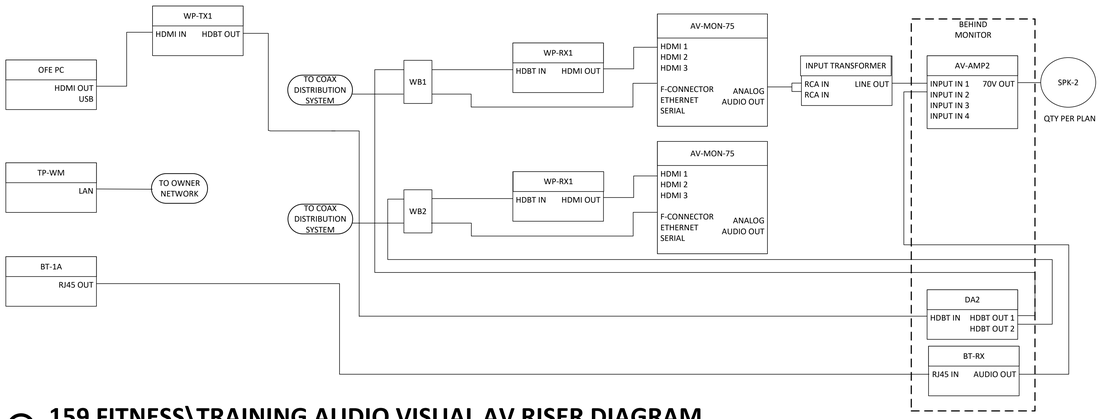

159 FITNESS\TRAINING AUDIO VISUAL AV RISER DIAGRAM

NO SCALE

NOTES:

1. THIS RISER IS DIAGRAMMATIC AND MAY NOT SHOW ACTUAL ROUTING, QUANTITIES, OR ALL CABLING REQUIRED FOR A COMPLETE INSTALLATION. THIS RISER IS SHOWN FOR CLARIFICATION OF CONNECTIONS, LOCATIONS AND CABLING TYPE.
2.AV CONTRACTOR TO VERIFY POWER REQUIREMENTS, CONNECTIONS, AND LOCATIONS FOR AV DEVICES WITH ELECTRICAL CONTRACTOR.
4. THE CONTRACTOR SHALL PROVIDE PROFESSIONAL LEVEL CALIBRATION TO THIS DISPLAY.
5. PROVIDE AUDIO SYSTEM TESTING AND CALIBRATION. CALIBRATION BY EAR IS NOT ACCEPTABLE.

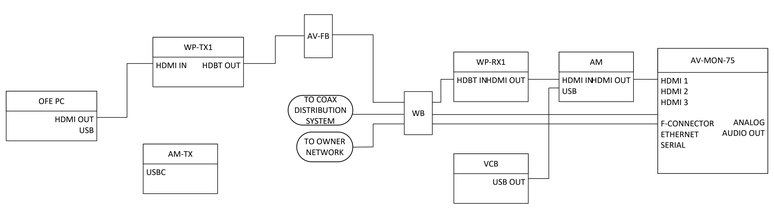

116/132 CONFERENCE ROOM AUDIO VISUAL AV RISER DIAGRAM

NO SCALE

NOTES:

1. THIS RISER IS DIAGRAMMATIC AND MAY NOT SHOW ACTUAL ROUTING, QUANTITIES, OR ALL CABLING REQUIRED FOR A COMPLETE INSTALLATION. THIS RISER IS SHOWN FOR CLARIFICATION OF CONNECTIONS, LOCATIONS AND CABLING TYPE.
2.AV CONTRACTOR TO VERIFY POWER REQUIREMENTS, CONNECTIONS, AND LOCATIONS FOR AV DEVICES WITH ELECTRICAL CONTRACTOR.
4. THE CONTRACTOR SHALL PROVIDE PROFESSIONAL LEVEL CALIBRATION TO THIS DISPLAY.
5. PROVIDE AUDIO SYSTEM TESTING AND CALIBRATION. CALIBRATION BY EAR IS NOT ACCEPTABLE.

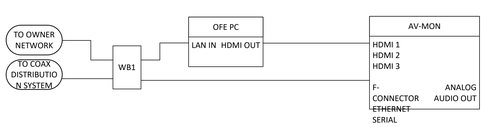

110 CLERK\146 BREAKROOM AUDIO VISUAL AV RISER DIAGRAM

NO SCALE

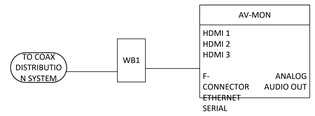

110 CLERK\146 BREAKROOM AUDIO VISUAL AV RISER DIAGRAM

NO SCALE

NOTES:

1. THIS RISER IS DIAGRAMMATIC AND MAY NOT SHOW ACTUAL ROUTING, QUANTITIES, OR ALL CABLING REQUIRED FOR A COMPLETE INSTALLATION. THIS RISER IS SHOWN FOR CLARIFICATION OF CONNECTIONS, LOCATIONS AND CABLING TYPE.
2.AV CONTRACTOR TO VERIFY POWER REQUIREMENTS, CONNECTIONS, AND LOCATIONS FOR AV DEVICES WITH ELECTRICAL CONTRACTOR.
4. THE CONTRACTOR SHALL PROVIDE PROFESSIONAL LEVEL CALIBRATION TO THIS DISPLAY.
5. PROVIDE AUDIO SYSTEM TESTING AND CALIBRATION. CALIBRATION BY EAR IS NOT ACCEPTABLE.

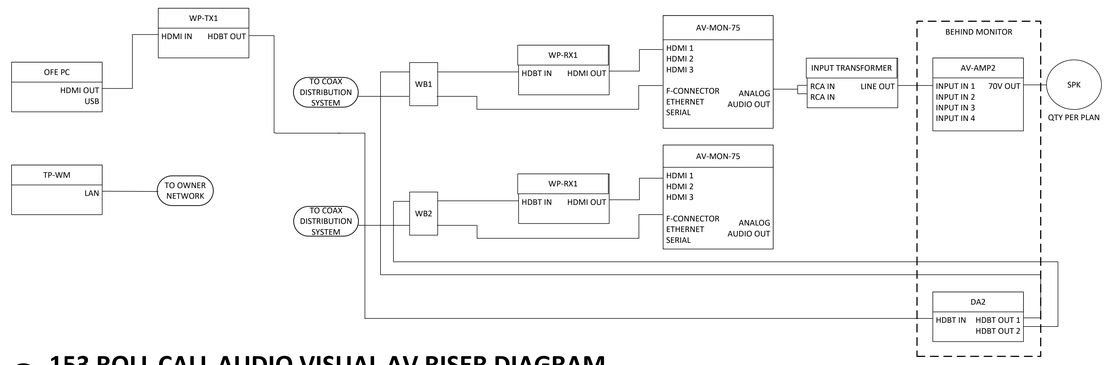

153 ROLL CALL AUDIO VISUAL AV RISER DIAGRAM

NO SCALE

NOTES:

1. THIS RISER IS DIAGRAMMATIC AND MAY NOT SHOW ACTUAL ROUTING, QUANTITIES, OR ALL CABLING REQUIRED FOR A COMPLETE INSTALLATION. THIS RISER IS SHOWN FOR CLARIFICATION OF CONNECTIONS, LOCATIONS AND CABLING TYPE.
2.AV CONTRACTOR TO VERIFY POWER REQUIREMENTS, CONNECTIONS, AND LOCATIONS FOR AV DEVICES WITH ELECTRICAL CONTRACTOR.
4. THE CONTRACTOR SHALL PROVIDE PROFESSIONAL LEVEL CALIBRATION TO THIS DISPLAY.
5. PROVIDE AUDIO SYSTEM TESTING AND CALIBRATION. CALIBRATION BY EAR IS NOT ACCEPTABLE.

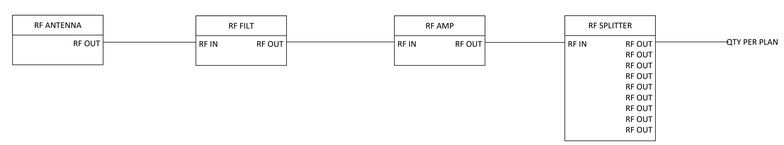

BUILDING ANTENNA DISTRIBUTION SYSTEM

NO SCALE

NOTES:

1. THIS RISER IS DIAGRAMMATIC AND MAY NOT SHOW ACTUAL ROUTING, QUANTITIES, OR ALL CABLING REQUIRED FOR A COMPLETE INSTALLATION. THIS RISER IS SHOWN FOR CLARIFICATION OF CONNECTIONS, LOCATIONS AND CABLING TYPE.
2.AV CONTRACTOR TO VERIFY POWER REQUIREMENTS, CONNECTIONS, AND LOCATIONS FOR AV DEVICES WITH ELECTRICAL CONTRACTOR.
4. THE CONTRACTOR SHALL PROVIDE PROPER ANTENNA AND RF AMPLIFIER TO PROVIDE PROPER OVER THE AIR ANTENNA SIGNAL TO ALL TV'S CONNECTED TO RF DISTRIBUTION SYSTEM.
5. PROVIDE RF SYSTEM TESTING AND CALIBRATION.
6. THIS SYSTEM NEEDS TO UTILIZE LOCAL OVER THE AIR ANTENNA SIGNAGE CHANNELS AT A MINIMIUM OF 3-1 KYTV, 3-2 WEATHER STATION, 10-1 KOLR-10, 33-1 KSPRLR, 33-2 KYCW, 49-1 FOX

NIXA POLICE DEPARTMENT
305 N LEEANN DR
NIXA, MO 65714

INSIGHT DESIGN iDeA ARCHITECTS
112 S. Main St. Nixa, MO 65714 Ph: 417-724-8553
CJD Engineering | Energy | Innovation
olsson
METTEMEYER ENGINEERING LLC
Christine ARCHITECTS
Architecture / Interior Design / Graphics
14013 S. Riverwood Blvd. / Suite 370 St. Louis, Missouri 63144
314-725-0088 / ann@christinc.com

Reissue Date

Professional of Record

DRAWINGS: FOR REFERENCE ONLY

DATE

Copyright 2026 ©
These prints are the property of the architect and shall be used only for the project referenced above.

Architect
LMH / NPR

Project #
24-003

Date
2025.06.10

Drawing Title:
AV RISER DIAGRAM

Sheet
T-2.2

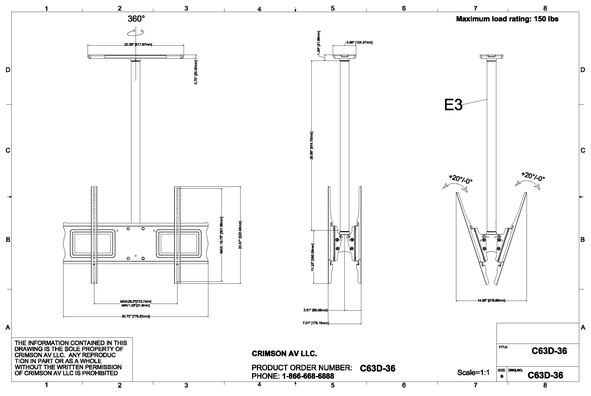

TV-CM

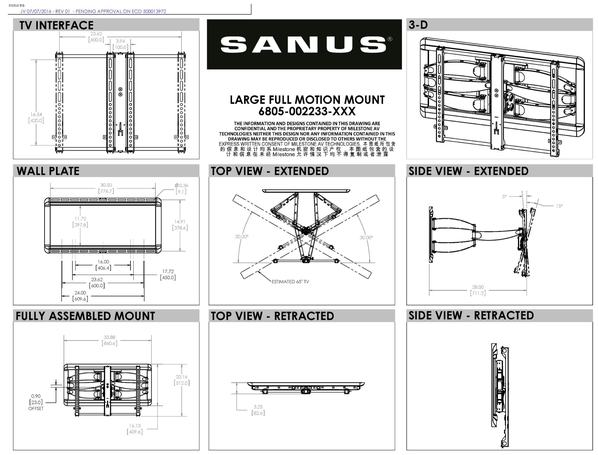

TV-MNT

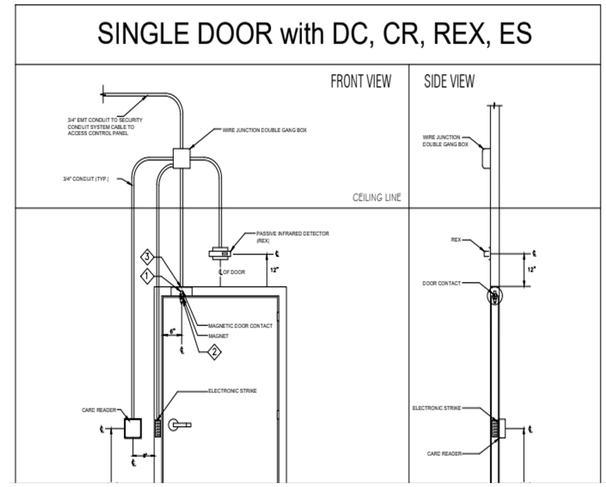

DC CR DIAGRAM

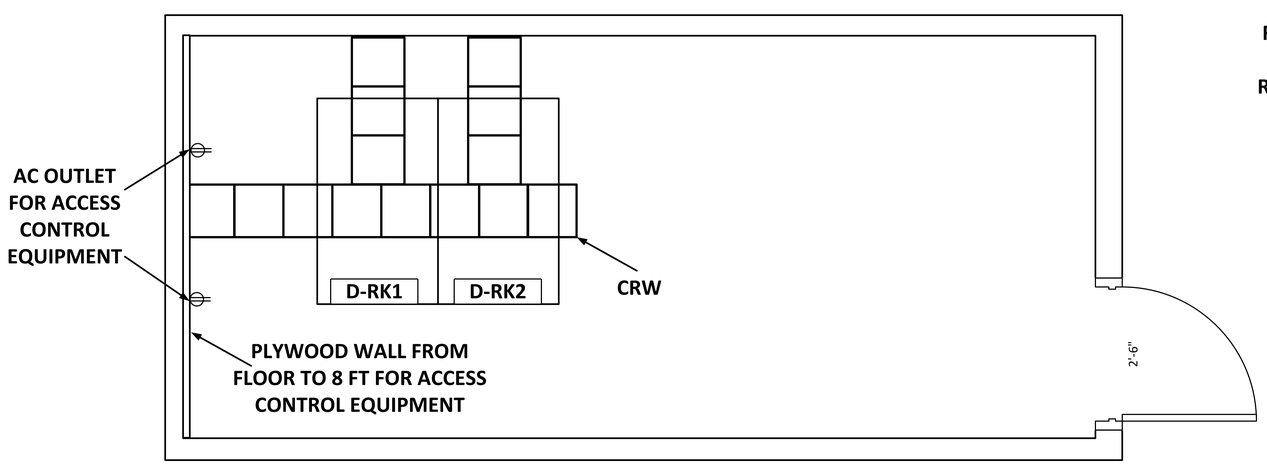

SERVER 127 FLOOR PLAN

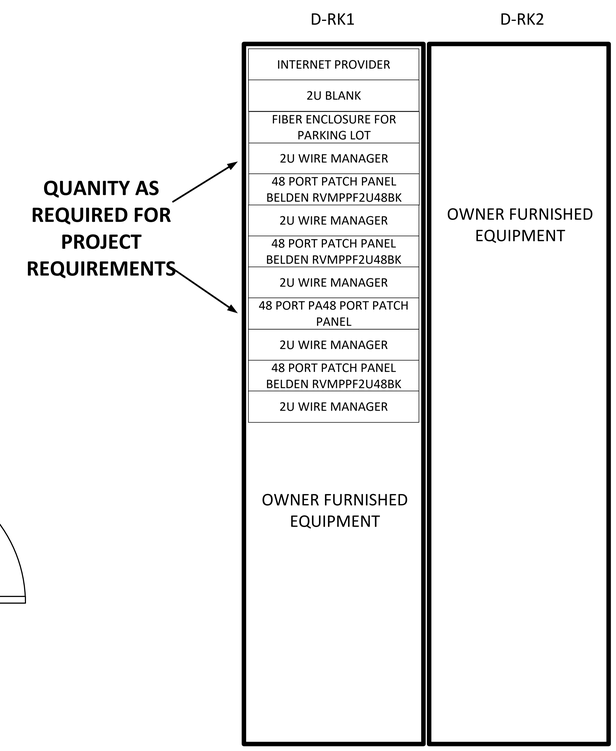

SERVER 127 FLOOR PLAN

NIXA POLICE DEPARTMENT
305 N LEEANN DR
NIXA, MO 65714

INSIGHT DESIGN iDeA ARCHITECTS
112 S. Main St., Nixa, MO 65714 Ph: 417-724-8553
CJD Engineering | Energy | Innovation
olsson
METTEMEYER ENGINEERING LLC
Christine ARCHITECTS
Architecture / Interior Design / Graphics

Reissue Date

Professional of Record

DRAWINGS: FOR REFERENCE ONLY

DATE

Copyright 2025 ©
These prints are the property of the architect and shall be used only for the project referenced above

Architect: LMH / NPR

Project #: 24-003

Date: 2025.06.10

Drawing Title: AV\DATA DIAGRAM

Sheet: T-3